TECHNICAL GUIDE

R-410A
ZE/XN SERIES
3 - 6 TON
60 Hertz

Description

YORK® ZE/XN Series units are convertible single package rooftops with a common roof curb for the 3, 4, 5, and 6 Ton sizes. Although the units are primarily designed for curb mounting on a roof, they can also be slab-mounted at ground level or set on steel beams above a finished roof.

All ZE/XN Series units are self-contained and assembled on rigid full perimeter base rails allowing for overhead rigging. Every unit is completely charged, wired, piped and tested at the factory to provide a quick and easy field installation.

All models (including those with an economizer) are convertible between bottom and horizontal duct connections.

ZE Series units are available in the following configurations: cooling only, cooling with electric heat, and cooling with one or two stage gas heat. Electric heaters are available as factory-installed option or field installed accessory.

XN Series units are available in the following configurations: cooling and heating only and cooling and heating with electric heat.

Tested in accordance with:

DESIGN CERTIFIED

C US

CERTIFIED

AHRI CERTIFIED™ www.ahridirectory.org Unitary Small AC AHRI Standard 210/240

AHRI CERTIFIED™ www.ahridirectory.org Unitary Small HP AHRI Standard 210/240

FOR DISTRIBUTION USE ONLY - NOT TO BE USED AT POINT OF RETAIL SALE

Table of Contents

Description 1
Table of Contents 2
Component Location 2
Nomenclature 4
Features and Benefits 5
Guide Specifications 9
Physical Data 12
Capacity Performance 17
Airflow Performance 34
Sound Performance 45
Electrical Data 46
Typical Field Power and Control Wiring 73
Weights and Dimensions 76

Component Location

Gas/Electric

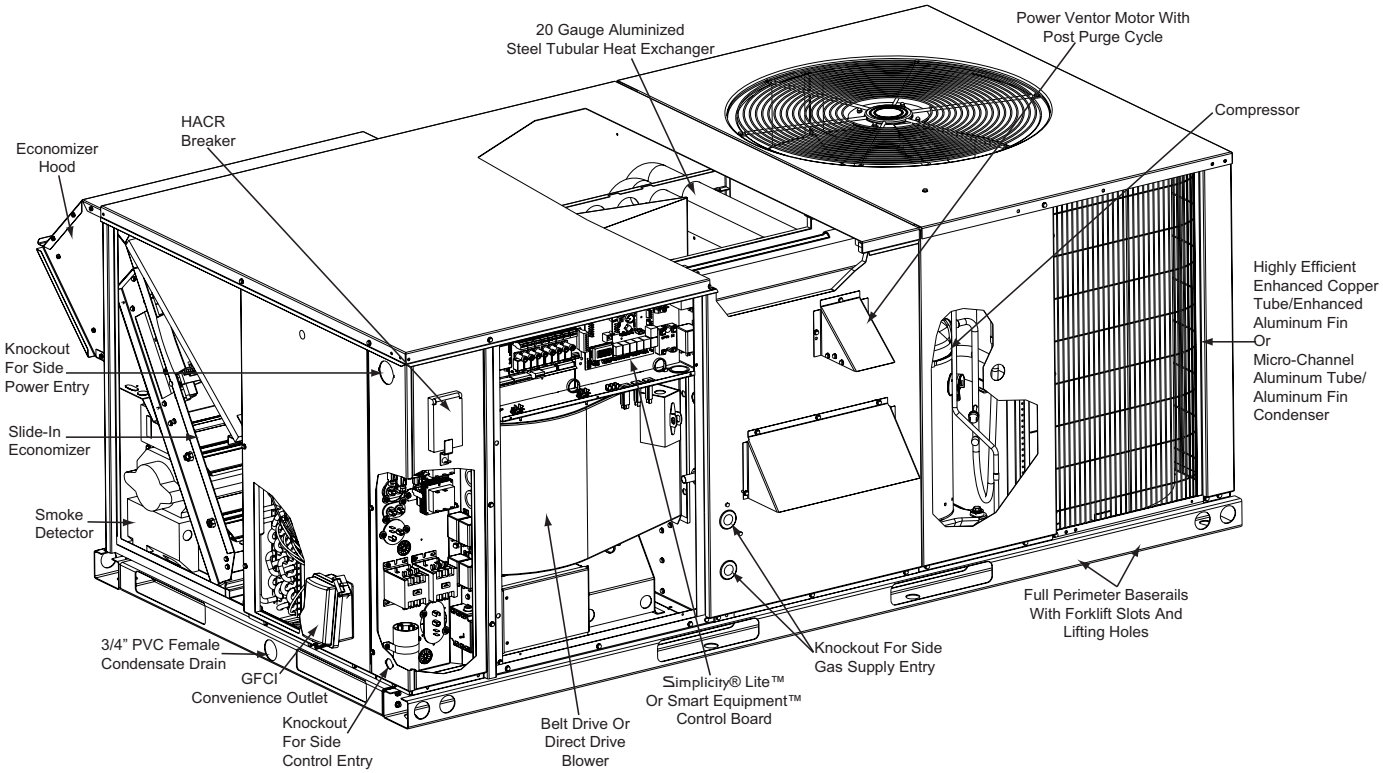

Electric/Electric and Heat Pump

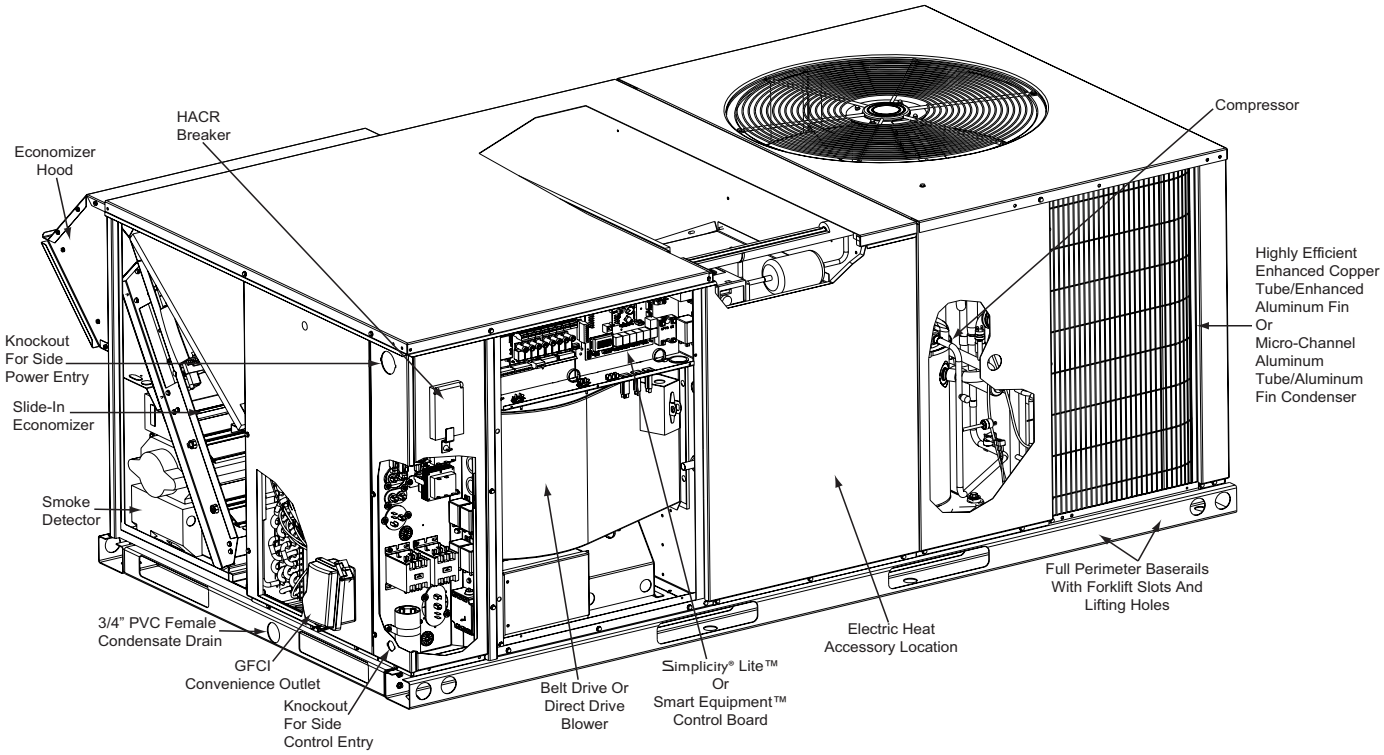

Nomenclature

3-6 Ton York® Model Number Nomenclature

Z	E	036	C	00	A	2	A	1	A	A	A	1	A	1

Product Category

Z = Package A/C
X = Package H/P

Product Identifier

E = Standard Efficiency
N = Standard Efficiency

Nominal Cooling Capacity

036 = 3 Ton
048 = 4 Ton
060 = 5 Ton
072 = 6 Ton

Heat Type

C = Cooling Only
E = Electric Heat

Single Stage Natural Gas Heat Options

H = 1 Stage Gas Aluminized Steel
J = 1 Stage Gas Stainless Steel
K = 1 Stage Low Nox Gas Aluminized Steel
L = 1 Stage Low Nox Gas Stainless Steel

Two Stage Natural Gas Heat Options

N = 2 Stage Gas Aluminized Steel
S = 2 Stage Gas Stainless Steel
P = 2 Stage Low Nox Gas Aluminized Steel
Q = 2 Stage Low Nox Gas Stainless Steel

Heat Capacity

00 = Cooling Only

Gas MBH Input (Unit Size Allowed)

05 = 50 MBH Input (1 Stage 036)
07 = 75 MBH Input (1 Stage 048) (2 Stage 036, 048, 060, 072)
10 = 100 MBH Input (1 Stage 036, 060, 072)
11 = 115 MBH Input (2 Stage 036)
12 = 125 MBH Input (1 Stage 048, 060, 072) (2 Stage 048, 060, 072)

Electric Heat (Unit Size Allowed)

05 = 5 KW
07 = 07 KW
10 = 10 KW
15 = 15 KW
20 = 20 KW
30 = 30 KW

Blower Option

A = Direct Drive[1]
B = Standard Static
D = High Static

1. 3 - 5 ton only

Voltage

1 = 208/230-1-60[2]
2 = 208/230-3-60
4 = 460-3-60
5 = 575-3-60

2. 3 - 5 ton only

Outdoor Air Option

A = No Economizer
C = Economizer w/o Barometric RLF
F = Econ BAS Rdy w/o Barometric RLF
H = Motorized Damper

Service Options

1 = No Service Options
2 = DSC (Disconnect Switch)
3 = NCO (Non-PWR Conv. Outlet)
4 = PCO (Powered Conv. Outlet)
5 = DSC,NCO
6 = DSC,PCO

Sensors

A = No Sensors
B = PHM (Phase Monitor)
C = DFS (Dirty Filter Switch)
D = SSD (Supply Air Smoke DET)
E = RSD (Return Air Smoke DET)
F = PHM,DFS
G = PHM,SSD
H = PHM,RSD
J = DFS,SSD
K = DFS,RSD
L = SSD,RSD
M = PHM,DFS,SSD
N = PHM,DFS,RSD
P = PHM,SSD,RSD
Q = DFS,SSD,RSD
R = PHM,DFS,SSD,RSD

Controls Option

A = Stand Alone Smart Equipment™
B = Simplicity Lite[3]
C = BACnet MSTP,Mdbs,N2 COM Card
D = CPC Control, DFS, APS
E = Novar ETM305IT Ctrl, DPS,APS
G = Novar UCM Ctrl, DFS, APS
H = Hnywll Excel 10 CTRL,DFS,APS
M= Verasys Single Zone
N= Verasys Change Over Bypass

3. 3 - 5 ton only

Refrigeration

A = Standard Refrigeration
B = ECC (E-Coat Cond Coil)
C = EEC (E-Coat Evap Coil)
F = ECC,EEC

Additional Options

1 = Std Throwaway Filter
2 = 2" Pleated Filters (Merv 8)
4 = Coil Guard (CG), STD Filter
5 = 2" Pleated Filter,CG

Cabinet Options

A = Std Cabinet
B = HDF(HingedFLTR/Tooless DR)
E = SSD (SST Drain Pan)
F = SSD, HFD

Product Generation

1 = First Generation
2 = Second Generation

Features and Benefits

Standard Features

- **Efficiency** - The 3 thru 5 ton units reach 14.0 SEER. The 6 ton unit reaches 14.2 IEER with the standard, factory-installed Intelli*Speed* variable frequency drive. Gas/electric units have electronic spark ignition and power vented combustion with steady state efficiencies of 80%. The heat pumps reach 14 SEER and 8.0 H.S.P. F. These efficiencies meet all legislated minimum levels and provide low operating costs.
- **DOE (Department of Energy) Compliant** - All ZE models meet minimum DOE efficiencies for cooling and fan efficiencies. Single phase gas heating products are fan energy rated (FER) to meet DOE requirements.

NOTE: All single phase 3 to 5 ton gas heating units are equipped with an ECM motor on direct drive units and a VFD on belt drive units.

- **Coil Technology** – All ZE condensers utilize Micro-Channel “all-aluminum” condensers which provide improved heat transfer capabilities and reduced charge volumes. All evaporators utilize a conventional copper tube/aluminum fin design for proven reliability and performance.
- **Convertible Airflow Design** - All models (including those with an economizer) are suitable for either bottom or horizontal duct connections. For bottom duct, remove the sheet metal panels from the supply and return air openings through the base of the unit. For horizontal duct, remove the supply and return air panels on the rear of the unit.
- **System Protection** - Suction line freezestats are supplied on all units to protect against loss of charge and coil frosting when the economizer operates at low outdoor air temperatures while the compressors are running. Every unit has solid-core liquid line filter-driers and high and low-pressure switches. Internal compressor protection is standard on all compressors.
- **Advanced Controls** - ZE (Electric/Electric and Gas/Electric) 3-5 ton units with no factory installed economizer or BAS options have the option of the reliable Simplicity® Lite™ control. All ZE models with factory installed economizers or any BAS option and heat pump (XN) units come with the Smart Equipment™ control system as standard. The new unit control incorporates the best of the already proven Simplicity® unitary controls and creates a more robust, intelligent control. The goal of this control is to utilize cutting edge technology making the equipment easier to install, operate, and service. All units are Factory commissioned, configured, and run tested.

Smart Equipment™ Control Board

- **Versatile -** The Smart Equipment™ (not applicable with units utilizing Simplicity Lite) control can be configured to use with a standard thermostat (easy to connect screw terminals), A zone sensor, or can be setup to communicate with multiple BAS communication protocols to integrate with building automation systems.
- **Reduce field installed complexity -** Each unit (not applicable with units utilizing Simplicity Lite) will come equipped with factory installed supply air, return air, and outdoor air temperature sensors providing key temperature readings thus reduce field installed complexity.
- **On-board USB Port -** The new control (not applicable with units utilizing Simplicity Lite) comes with a long list of features including data logging, current and previous system faults and software update capabilities using the on board USB port and common flash drive. Energy use monitoring capabilities allow custom tailoring to allow a system to work more efficiently at all times and occupancy levels. Self test and start-up reports also available from the board VIA the USB port.
- **Embedded LCD Display -** The board (not applicable with units utilizing Simplicity Lite) has a easy to read, built-in LCD display and easy to use navigation joystick and buttons allowing the user to quickly navigate the menus displaying unit status, options, current function, supply, return and outdoor temperatures, fault codes and other information.
- **Low Ambient** - An integrated low-ambient control allows all units to operate in the cooling mode down to 0°F outdoor ambient without additional assistance. Optionally, the control board can be programmed to lockout the compressors when the outdoor air temperature is low or when free cooling is available.

⚠ CAUTION

The *Simplicity*® Lite or Smart Equipment™ control board used in this product will effectively operate the cooling system down to 0°F when this product is applied in a comfort cooling application for people. An economizer is typically included in this type of application. When applying this product for process cooling applications (computer rooms, switchgear, etc.), please call the applications department for Ducted Systems @ 1-877-874-SERV for guidance. Additional accessories may be needed for stable operation at temperatures below 30° F.

- **Anti-Short Cycle Protection** - To aid compressor life, an anti-short cycle delay is incorporated into the standard controls. Compressor reliability is further ensured by programmable minimum run times. For testing, the anti-short cycle delay can be temporarily overridden with the push of a button.
- **Fan Delays** - Fan on and fan off delays are fully programmable. Furthermore, the heating and cooling fan delay times are independent of one another. All units are programmed with default values based upon their configuration of cooling and heat.
- **Safety Monitoring** - The control board monitors the high and low-pressure switches, the freezestats, the gas valve, if applicable, and the temperature limit switch on gas and electric heat units. The unit control board will alarm on ignition failures, compressor lockouts and repeated limit switch trips.
- **Nuisance Trip Protection and Strikes** - To prevent nuisance trouble calls, the control board uses a “three times, you’re out” philosophy. The high and low-pressure switches and the freezestats must trip three times within two hours before the unit control board will lock out the associated compressor.
- **On Board Diagnostics** - Each alarm will energize a trouble light on the thermostat, if so equipped, and flash an alarm code on the control board LED or on LCD with Smart Equipment™ controlled units. Each high and low-pressure switch alarm as well as each freezestat alarm has its own flash code. The control board saves the five most recent alarms in memory, and these alarms can be reviewed at any time. Alarms and programmed values are retained through the loss of power.

- **Reliable** - From the beginning - All units undergo computer automated testing before they leave the factory. Units are tested for refrigerant charge and pressure, unit amperage, and 100% functionality. For the long term - All units are painted with a long lasting, powder paint that stands up over the life of the unit. The paint used has been proven by a 750-hour salt spray test.
- **Flexible Placement** - All models and configurations share the same cabinet/footprint and thus the same roof curb. You have the flexibility to set one curb and choose the correct tonnage size and heating option after the internal loads have been determined.
- **Full Perimeter Base Rails** - The permanently attached base rails provide a solid foundation for the entire unit and protect the unit during shipment. The rails offer forklift access from 3 sides, and rigging holes are available so that an overhead crane can be used to place the units on a roof.
- **Easy Installation** - Gas and electric utility knockouts are supplied in the unit underside as well as the side of the unit. A clearly identified location is provided to mount a field supplied electrical disconnect switch. Utility connections can be made quickly and with a minimum amount of field labor.
- **Wide Range of Indoor Airflows** - Indoor fan motors are either direct-drive or belt-drive type providing maximum flexibility to handle most airflow requirements.
- **Gas Heat Operation** - All single phase models with gas heat have minimum annual fuel utilization efficiency (AFUE) of 81%. All three phase models with gas heat have minimum steady state efficiency of 80%. Each section includes a durable heat exchanger with aluminized steel or optional stainless steel tubes, a redundant gas valve, spark ignition, power venting, an ignition module for 100% shut-off and all of the safety controls required to meet the latest ANSI standards.

  The gas supply piping can be routed into the heating compartment through a hole in the base pan of the unit or through a knockout in the piping panel on the front of the unit.

  Electric Heat Operation - All electric heat models are wired for a single power source and include a bank of nickel chromium elements mounted at the discharge of the supply air blower to provide a high velocity and uniform distribution of air across the heating elements.

  Every element is fully protected against excessive temperature by thermal limit switches.

  The power supply wiring can be routed into the control box through a threaded pipe connection (field supplied) in the base pan of the unit or through a knockout in the wiring panel on the side of the unit.
- **Warranty** - All models include a 1-year limited warranty on the complete unit. Compressors and factory installed electric heater elements each carry a 5-year warranty. Aluminized steel and stainless steel tubular heat exchangers carry a 10- year warranty.

Factory Installed Options

NOTE: Simplicity Lite models are only available with a field installed RRS economizer, which is equipped standard with single enthalpy control (dual enthalpy available as field installed kit). Smart Equipment™ models are available with factory or field installed economizers including options for a Smart Equipment™ controlled economizer or an externally controlled BAS economizer where both feature standard dry bulb control (single and dual enthalpy available as field installed kits).

- **Economizers -** All units offer a variety of optional factory installed economizers that are shipped, installed and

wired with AMCA 511 Licensed Class 1A low leak dampers designed to exceed ASHRAE 90.1 and the International Energy Conservation Code (IECC) certification requirements by achieving leakage rates of 3 cfm/ sq. ft. at 1" of static pressure. Each economizer goes through a rigorous 60,000 cycle test. Dry bulb, single enthalpy, and dual enthalpy (with field installed kit) can be selected. All economizer options are fully integrated into the Smart Equipment™ controls. The economizer has spring return, fully modulating damper actuators and is capable of introducing up to 100% outdoor air. As the outdoor air intake dampers open, the return air dampers close. The changeover from mechanical refrigeration to economizer operation is regulated by the outdoor air dry bulb temperature or the outdoor air enthalpy input. The dual enthalpy kit provides a second input used to monitor the return air (field installed). The installer needs only to assemble the outdoor air hood, attach the enthalpy control the hood and mount the hood to the unit (hood and control are provided).

- **Dry Bulb Economizer -** Economizer operation is enabled by the outdoor air temperature being less than the setpoint of the economizer module.
- **Enthalpy Economizer -** The added outdoor air enthalpy sensor enables economizer operation if the outdoor enthalpy is less than the setpoint of the economizer logic module.

- **Motorized Outdoor Air Intake Damper** -Includes a slide-in / plug-in damper assembly with a 2-position, spring return motor actuator which opens to a pre-set position whenever the supply air blower is operating and will drive fully closed when the blower unit shuts down.

  The rain hood is painted to match the basic unit and must be field assembled before installing.
- **E-Coat Condenser Coils -** The condenser coils are coated with an epoxy polymer coating to protect against corrosion.
- **E-Coat Evaporator Coils -** The evaporator coils are coated with an epoxy polymer coating to protect against corrosion.
- **Electric Heaters** - Wired for single point power supply. These nickel chromium heater elements are provided with limit and automatic reset capability to prevent operation at excessive temperatures.
- **Filter Options** - Standard units are shipped with 1" throw-away filters installed. 2" Pleated Filters, MERV 8 are offered as a factory installed option.
- **Convenience Outlet** - This 110 volt outlet can be “powered” by the unit with a stepdown transformer or the unit may be ordered with a “non-powered” convenience outlet that can be wired in the field.
- **Disconnect Switch** - For gas heat units and cooling units with electric heat, a HACR breaker sized to the unit is provided. For cooling only units, a switch sized to the largest electric heat available for the particular unit is provided. Factory installed option only.
- **Smoke Detectors** - (supply air & return air) The smoke detectors stop operation of the unit by interrupting power to the control board if smoke is detected within the air compartment.

⚠WARNING

Factory installed smoke detectors in the return air, may be subjected to freezing temperatures during “off” times due to out side air infiltration. These smoke detectors have an operational limit of 32°F to 131°F. Smoke detectors installed in areas that could be out side those limitations will have to be moved to prevent having false alarms.

- **Coil Guard** - Customers can purchase a coil guard kit to protect the condenser coil from damage. This is not a hail guard kit.
- **Stainless Steel Heat Exchanger** - For applications in corrosive environments, this option provides a full stainless steel heat exchanger assembly.
- **Stainless Steel Drain Pan** - An optional rustproof stainless steel drain pan is available to provide years of trouble-free operation in corrosive environments.
- **Bottom Drain Connection** - An optional bottom drain connection is available for inside the curb connections for applications in cold environments to reduce freezing drain lines.
- **Phase Monitors** - Designed to prevent unit damage. The phase monitor will shut the unit down in an out-of phase condition.
- **Dirty Filter Switch** - This kit includes a differential pressure switch that energizes the fault light on the unit thermostat, indicating that there is an abnormally high pressure drop across the filters. Factory installed option or field installed accessory.
- **Hinged & Toolless Filter, Motor and Electrical Access Panels -** This option allows for easy access and maintenance.

NOTE: Knobs are shipped inside the unit to prevent shipping damage. These must be field installed for tool-less operation.

- **High Static Drive -** May include a belt, blower pulley, motor pulley or a motor change to enhance blower performance.

Control Options

- **Smart Equipment™ with Communication Option Control** - The York® Smart Equipment™ with Communication Option Control is factory installed. It includes all the features of the Smart Equipment™ control with an additional gateway to BACnet MS/TP (programmable to Modbus or N2 protocols).
- **Novar® BAS Control -** The Novar® building automation system controller is factory installed. Incudes supply air sensor, return air sensor, dirty filter indicator switch, and air proving switch.

- **CPC BAS Control -** The Computer Process Controls Model 810-3060 ARTC Advanced Rooftop building automation system controller is factory installed. Includes supply air sensor, return air sensor, dirty filter indicator switch and air proving switch.
- **Honeywell BAS Control -** The Honeywell W7750C building automation system controller is factory installed. Includes air supply sensor, return air sensor, dirty filter indicator switch, and air proving switch.
- **Verasys** - Verasys provides a simple user experience with configurable self-recognizing controllers without the need for any additional tools. Verasys creates enhanced integration of HVACR equipment, zoning, and controls. Contractors are able to offer a complete bundled solution of equipment and controls to serve the light commercial market.

Field Installed Accessories

NOTE: Simplicity Lite models are only available with a field installed RRS economizer, which is equipped standard with single enthalpy control (dual enthalpy available as field installed kit). Smart Equipment™ models are available with factory or field installed economizers including options for a Smart Equipment™ controlled economizer or an externally controlled BAS economizer where both feature standard dry bulb control (single and dual enthalpy available as field installed kits).

- **Economizers -** All units offer a variety of optional field installed economizers that are shipped, installed and wired with AMCA 511 Licensed Class 1A low leak dampers designed to exceed ASHRAE 90.1 and the International Energy Conservation Code (IECC) certification requirements by achieving leakage rates of 3 cfm/ sq. ft. at 1" of static pressure. Each economizer goes through a rigorous 60,000 cycle test. Dry bulb, single enthalpy, and dual enthalpy (with field installed kit) can be selected. All economizer options are fully integrated into the Smart Equipment™ controls. The economizer has spring return, fully modulating damper actuators and is capable of introducing up to 100% outdoor air. As the outdoor air intake dampers open, the return air dampers close. The changeover from mechanical refrigeration to economizer operation is regulated by the outdoor air dry bulb temperature or the outdoor air enthalpy input. The dual enthalpy kit provides a second input used to monitor the return air (field installed). The installer needs only to assemble the outdoor air hood, attach the enthalpy control the hood and mount the hood to the unit (Hood and control are provided).
  - **Dry Bulb Economizer** - Economizer operation is enabled by the outdoor air temperature being less than the setpoint of the economizer module.
  - **Enthalpy Economizer** - The added outdoor air enthalpy sensor enables economizer operation if the outdoor enthalpy is less than the setpoint of the economizer logic module.
- **Motorized Outdoor Air Intake Damper** -Includes a slide-in / plug-in damper assembly with a 2-position, spring return motor actuator which opens to some pre-set position whenever the supply air blower is operating and will drive fully closed when the blower unit shuts down.

  The rain hood is painted to match the basic unit and must be field assembled before installing.
- **Electric Heaters** - wired for single point power supply.

  These nickel chromium heater elements are provided with limit and automatic reset capability to prevent operation at excessive temperatures.
- **Roof Curbs** - Eight and fourteen-inch high roof curbs provide a water-tight seal between the unit and the finished roof. These full perimeter curbs meet the requirements of the National Roofing Contractors Association (NRCA) and are shipped knocked-down for field assembly.

  Roof curbs are designed to fit inside the base rails of the unit and include both a wood nailing strip and duct hanger supports.
- **High Altitude Natural Gas** - Burner orifices and pilot orifices are provided for proper furnace operation at altitudes up to 6,000 feet.
- **Propane** - Burner orifices, pilot orifices and gas valve parts are provided to convert a natural gas furnace to propane.
- **High Altitude Propane** - Burner orifices and pilot orifices are provided for proper furnace operation at altitudes up to 6,000 feet. This accessory supplements the basic propane conversion kit.
- **Low Nox Kit** - Required to reduce the emission of nitrogen oxides below 40 nano grams per joule.
- **Power Exhaust** - Our single input economizer options are available with power exhaust. Whenever the outdoor air intake dampers are opened for free cooling, the exhaust fan will be energized to prevent the conditioned space from being over-pressurized during economizer operation.

  The power exhaust option can only be used on bottom duct configurations.
- **Barometric Relief Damper** - This damper accessory can be used to relieve internal building air pressure on units with an economizer without power exhaust. This accessory includes a rain hood, a bird screen and a fully assembled damper. With bottom duct connections, the damper should be mounted over the opening in the return air panel. With horizontal ductwork, the accessory should be mounted on the return air duct.
- **Enthalpy Accessory Control Kit** - This kit contains the required components to convert a single enthalpy economizer to dual enthalpy.
- **Burglar Bars** - Mount in the supply and return openings to prevent entry into the duct work.
- **Flue Exhaust Extension Kit** - In locations with wind or weather conditions which may interfere with proper exhausting of furnace combustion products, this kit can be installed to prevent the flue exhaust from entering nearby fresh air intakes.
- **CO_2 Sensor** - Senses CO_2 levels and automatically overrides the economizer when levels rise above the present limits.

- **Coil Guard** - Customers can purchase a coil guard kit to protect the condenser coil from damage. This is not a hail guard kit.
- **Hail Guard** - Hail Guard kit is available to prevent unit from hail damage. This is a sloped hood that fits above the coil.
- **Gas Piping Kit** - This kit supplies all necessary fittings and shut off valve.

Guide Specifications

General

York's ZE/XN units are convertible single package units. Although the units are primarily designed for curb mounting on a roof, they can also be slab-mounted at ground level or set on steel beams above a finished roof. Cooling only, cooling with gas heat, cooling with electric heat and heat pump with electric heat models are available with a wide variety of factory-mounted options and field-installed accessories to make them suitable for almost every application. All units are self-contained and assembled on full perimeter base rails with holes in the four corners for overhead rigging. Every unit is completely piped, wired, charged and tested at the factory to simplify the field installation and to provide years of dependable operation. All models (including those with an economizer) are suitable for either bottom or horizontal duct connections. Models with power exhaust are suitable for bottom duct connections only. For bottom duct, remove the sheet metal panels from the supply and return air openings through the base of the unit. For horizontal duct, remove the supply and return air panels on the rear of the unit.

All non-Scroll compressors include crankcase heaters and all compressors have internal pressure relief. Every refrigerant circuit includes a liquid line filter-drier, a discharge line high pressure switch and a suction line with a freezestat and low pressure/loss of charge switch.The unit control circuit includes a 75 VA transformer, a 24-volt circuit breaker and a relay board with a compressor lockout circuit, a terminal strip for thermostat wiring, plus an additional set of pin connectors to simplify the interface of additional field controls. All models are CSA listed. All models include a 1-year limited warranty on the complete unit. Compressors and factory installed electric heater elements carry a 5-year warranty. Aluminized steel and Stainless steel tubular heat exchangers carry a 10-year warranty.

Description

Units shall be factory-assembled, single packaged, Electric Cooling/Gas Heat, Electric Cooling/Optional Electric Heat, Heat Pump/Optional Electric Heat and are designed for outdoor mounted installation.

The 3 ton, 4 ton, and 5 ton units shall have minimum SEER rating of 14.0 with heat pumps having a 8.0 H.S.P.F. The 6 ton units shall have a minimum IEER rating of 14.2. They shall have built-in field convertible duct connections for down discharge supply/return or horizontal discharge supply/return, and be available with factory installed options or field installed accessories. The units shall be factory wired, piped, charged with R-410A refrigerant and factory tested prior to shipment. All unit wiring shall be both numbered and color coded. All units the cooling performance shall be rated in accordance with DOE and AHRI test procedures. Units shall be CSA listed, classified to ANSI Z21.47, UL 1995/CSA No. 236 standards.

Unit Cabinet

Unit cabinet shall be constructed of galvanized steel, with exterior surfaces coated with a non-chalking, powdered paint finish, certified at 750-hour salt spray test per ASTMB117 standards. Indoor blower section shall be insulated with a minimum 1/2” thick insulation, coated on the airside. Aluminum foil faced insulation shall be used in the furnace compartment and be fastened with ridged fasteners to prevent insulation from entering the air stream. Cabinet panels shall be “large” size, easily removable for servicing and maintenance. Full perimeter base rails shall be provided to assure reliable transit of equipment, overhead rigging and proper sealing on roof curb applications. Disposable 1" filters shall be furnished and be accessible through a removable access door, sealed airtight. Units filter track shall be designed to accommodate either 1" or 2" filters. Fan performance measuring ports shall be provided on the outside of the cabinet to allow accurate air measurements of evaporator fan performance without removing panels or creating air by-pass of the coils. Condensate pan shall be internally sloped and conform to ASHRAE 62-89 self-draining standards. Condensate connection shall be a minimum of 3/4” I.D. female and be a ridged mount connection.

Indoor (Evaporator) Fan Assembly

The indoor fan shall be a factory installed direct-drive or belt-drive assembly that includes an adjustable pitch motor pulley. Job site selected brake horsepower (B.H.P.) shall not exceed the motors nameplate horsepower rating, plus the service factor. Units shall be designed not to operate above service factor. Fan wheel shall be double-inlet type with forward-curved blades, dynamically balanced to operate smoothly throughout the entire range of operation. Airflow design shall be constant air volume. Bearings shall be sealed and permanently lubricated for longer life and no maintenance.

Outdoor (Condenser) Fan Assembly

The outdoor fan shall be of the direct-drive propeller type (3-5 ton units), discharge air vertically, have aluminum blades riveted to a corrosion resistant steel spider bracket and shall be dynamically balanced for smooth operation. The outdoor fan motor shall be totally enclosed with permanently lubricated bearings, internally protected against overload conditions and staged independently.

Refrigerant Components

Compressor:

a. Shall be internally protected with internal high-pressure relief and over temperature protection.

b. Shall have internal spring isolation and sound muffling to minimize vibration and noise, and be externally isolated on a dedicated, independent mounting.

Coils:

a. Evaporator coils shall have aluminum plate fins mechanically bonded to seamless internally enhanced copper tubes with all joints brazed. Special Phenolic coating shall be available as a factory option.

b. Evaporator coils shall be of the direct expansion, draw-thru design.

c. Condenser coils shall have aluminum plate fins mechanically bonded to seamless internally enhanced copper tubes with all joints brazed or Micro-Channel aluminum tube, aluminum fins.

d. Condenser coils shall be of the direct expansion, draw-thru design.

Refrigerant Circuit and Refrigerant Safety Components shall include:

a. Independent, fixed-orifice, or thermally operated expansion devices.

b. Filter drier/strainer to eliminate any moisture or foreign matter.

c. Accessible service gage connections on both suction and liquid lines to charge, evacuate, and measure refrigerant pressure during any necessary servicing or troubleshooting, without losing charge.

d. The refrigeration system shall provide at least 15°F of sub-cooling at design conditions.

Unit Controls

a. Unit shall be complete with self-contained low-voltage control circuit protected by a resettable circuit breaker on the 24-volt transformer side.

b. Unit shall incorporate a lockout circuit which provides reset capability at the space thermostat or base unit, should any of the following standard safety devices trip and shut off compressor.

c. Loss-of-charge/Low-pressure switch.

d. High-pressure switch.

e. Freeze-protection thermostat, evaporator coil.

f. Unit shall incorporate “AUTO RESET” compressor over temperature, over current protection.

g. Unit shall operate with conventional thermostat designs and have a low voltage terminal strip for easy hook-up.

h. Unit control board shall have on-board diagnostics and fault code display.

i. Standard controls shall include anti-short cycle and low voltage protection, and permit cooling operation down to 0°F.

j. Control board shall monitor each refrigerant safety switch independently.

k. Control board shall retain last 5 fault codes in non volatile memory which will not be lost in the event of a power loss.

Gas Heating Section (Single Or 2 Stage)

Shall be designed with induced draft combustion with post purge logic, energy saving direct spark ignition, and redundant main gas valve. Venter wheel shall be constructed of stainless steel for corrosion resistance. The heat exchanger shall be of the tubular type, constructed of T1-40 aluminized steel for corrosion resistance and allowing minimum mixed air entering temperature of 25°F. Burners shall be of the inshot type, constructed of aluminum coated steel and contain air mixture adjustments. All gas piping shall enter the unit cabinet at a single location through either the side or curb without any field modifications. Integrated control boards shall provide timed control of evaporator fan functioning and burner ignition. Heating section shall be provided with the following minimum protection:

a. Primary and auxiliary high-temperature limit switches.

b. Induced draft motor speed sensor.

c. Flame roll out switch.

d. Flame proving controls.

e. If any of the above safety devices trip, a LED (light-emitting diode) indicator shall flash a diagnostic code that indicates which safety switch has tripped.

NOTE: All 2 Stage Gas Heat, 60% Capacity 1st Stage, 40% Capacity 2nd Stage.

Electric Heating Section

An electric heating section, with nickel chromium elements, shall be provided in a range of 5 thru 30 KW, offering two stages of capacity - 16 KW and above on 208/230 volt heaters and 20 KW and above on 460 and 575 volt heaters. The heating section shall have a primary limit control(s) and automatic reset to prevent the heating element system from operating at an excessive temperature. The heating section assembly shall slide out of the unit for easy maintenance and service. Units with Electric Heating shall be wired for a single point power supply with branch circuit fusing (where required).

Unit Operating Characteristics

Unit shall be capable of starting and running at 125°F outdoor temperature, exceeding maximum load criteria of AHRI Standard 210/240. The compressor, with standard controls, shall be capable of operation down to 0°F outdoor temperature. Unit shall be provided with fan time delay to prevent cold air delivery before heat exchanger warms up (Gas heat only).

Electrical Requirements

All unit power wiring shall enter unit cabinet at a single factory provided location and be capable of side or bottom entry, to minimize roof penetrations and avoid unit field modifications.

Separate side and bottom openings shall be provided for the control wiring.

Standard Limited Warranties

- Compressor 5 Years
- Heat Exchanger 10 Years
- Factory Installed Electric Heat Element 5 Years
- Other Parts 1 Year

Optional Outdoor Air

Shall be made available by either/or:

- **Dry Bulb Automatic Economizer** - Outdoor and return air dampers that are interlocked and positioned by a fully-modulating, spring-return damper actuator. The maximum leakage rate for the outdoor air intake dampers shall be designed to meet ASHRAE 90.1, AMCA 511 Class 1A damper, and the International Energy Conservation Code (IECC) certification requirements by achieving leakage rates of 3 cfm/sq. ft. at 1" of static pressure. Changeover from compressor to economizer operation shall be provided by an integral electronic enthalpy control that feeds input into the basic module. The outdoor intake opening shall be covered with a rain hood that matches the exterior of the unit. Water eliminator/filters shall be provided. Simultaneous economizer/compressor operation is also possible. Dampers shall fully close on power loss. Available with barometric relief and power exhaust.
- **Motorized Outdoor Air Dampers** - Outdoor air dampers are positioned by a 2-position, spring-return damper actuator. A unit-mounted potentiometer shall be provided to adjust the outdoor damper assembly to take in the design CFM of outdoor air to meet the ventilation requirements of the conditioned space during normal operation. Whenever the indoor fan motor is energized, the dampers open up to one of two pre-selected positions - regardless of the outdoor air enthalpy. Dampers return to the fully closed position when the indoor fan motor is de-energized. Dampers shall fully close on power loss.

Other Pre-engineered Accessories Available

- **Roof Curb** - 14"and 8” high, full perimeter curb with wood nailer (shipped knocked-down).
- **Barometric Relief Damper** - Contains a rain hood, air inlet screen, exhaust damper and mounting hardware. Used to relieve internal air pressure through the unit.
- **Propane Conversion Kit** - Contains new orifices and gas valve parts to convert from natural to L.P. gas. One per unit required.
- **High Altitude - Natural Gas** - Contains orifices required for applications between 2000 and 6000 feet altitude.
- **High Altitude - Propane Gas** - Contains orifices required for applications between 2000 and 6000 feet altitude. Must be used with propane conversion kit.
- **Low Nox** - Required to reduce the emission of nitrogen oxides below 40 nanograms per joule.
- **Gas Piping** - Contains 1/2” pipe nipples, fittings and gas cock (including panel access gaskets) required for bottom gas supply connection with external shut off.
- **Power Exhaust Option** - To work in conjunction with economizers.
- **Electric Heaters**
- **Economizer/motorized Damper Rain Hood** - Contains all hood panels and the hardware for assembling.
- **Manual Outdoor Air Damper**
- **Coil Guard Kit** - Guard for cooling coil.
- **Hail Guard**
- **Flue Exhaust Extension**

OTHER FACTORY INSTALLED OPTIONS

- **Power Exhaust Option** - To work in conjunction with economizers.
- **Stainless Steel Heat Exchanger**
- **Stainless Steel Drain Pan**
- **Bottom Drain Connection**
- **E-Coat Epoxy Polymer Coated Condenser and Evaporator Coil**
- **Electronic Single Enthalpy Economizer**
- **Dirty Filter Switch**
- **Phase Monitor**
- **Coil Guard**
- **Powered GFI Convenience Outlet**
- **Non-powered GFI Convenience Outlet**
- **BAS Controls - Smart Equipment™ with BAS Communication (BACnet MS/TP, Modbus, and Johnson Controls N2) Option, CPC, HONEYWELL, NOVAR, YORK**
- **Bas Ready Economizer (2-10 V.D.C. Actuator without a Controller)**
- **Hinged Filter Door Access and Toolless Access Panels**
- **2" Pleated Filters, MERV 8**
- **Disconnect Switch**
- **Supply Air Smoke Detector**
- **Return Air Smoke Detector**
- **Direct Drive (3-5 ton units only) or Belt Drive Blower with High Static Drive Option**

Physical Data

ZE036-072 Physical Data

Component	Models															
	ZE036				ZE048				ZE060				ZE072			
Nominal Tonnage	**3**				**4**				**5**				**6**			
ARI COOLING PERFORMANCE																
Gross Capacity @ AHRI A point (Btu)	36600				49100				59000				68000			
AHRI net capacity (Btu)	35500				47500				57000				66000			
EER	12.0				12.0				11.8				11.20[1]/11.00[2]			
SEER	14.0				14.0				14.0				-			
IEER													-			
IEER IntelliSpeed													14.2			
CFM	1200				1450				1680				2057			
System power (KW)	2.96				3.96				4.83				5.9			
Refrigerant type	R-410A				R-410A				R-410A				R-410A			
Refrigerant charge (lb-oz)																
System 1	4-4				5-6				6-4				6-6			
AHRI HEATING PERFORMANCE																
Heating model	H05	H10	N07	N11	H07	H12	N07	N12	H10	H12	N07	N12	H10	H12	N07	N12
Heat input (K Btu)	50	100	75	115	75	125	75	125	100	125	75	125	100	125	75	125
Heat output (K Btu)	40	80	60.8	92	60	100	60.8	100.6	80	100	60.8	100.6	80	100	61	100.6
AFUE% (Single Phase Only)	81	81	-	-	81	81	-	-	81	81	-	-	-	-	-	-
FER Compliant Direct Drive (Single Phase Gas Heat Only)[3]	Yes	Yes	-	-	Yes	Yes	-	-	Yes	Yes	-	-	-	-	-	-
FER Compliant Belt Drive (Single Phase Gas Heat Only)[3]	Yes	Yes	-	-	Yes	Yes	-	-	No	Yes	-	-	-	-	-	-
Steady state efficiency (%) (3 Phase Only)	80	80	81.1	80.2	80	80	81.1	80.5	80	80	81.1	80.5	80.0	80.0	81.1	80.5
No. burners	2	4	3	5	3	5	3	5	4	5	3	5	4	5	3	5
No. stages	1	1	2	2	1	1	2	2	1	1	2	2	1	1	2	2
Temperature Rise Range (ºF)	15-45	45-75	35-70	55-90	25-70	45-75	25-70	45-75	25-55	35-75	20-55	35-75	25-55	30-75	15-45	30-75
Gas Limit Setting (ºF) - Direct Drive	240	190	210	200	210	165	210	165	170	165	210	165	-	-	-	-
Gas Limit Setting (ºF) - Belt Drive	240	210	240	200	240	210	240	210	210	210	210	210	210	210	210	210
Gas piping connection (in.)	1/2	1/2	1/2	1/2	1/2	1/2	1/2	1/2	1/2	1/2	1/2	1/2	1/2	1/2	1/2	1/2
DIMENSIONS (inches)																
Length	82 1/4				82 1/4				82 1/4				82 1/4			
Width	44 7/8				44 7/8				44 7/8				44 7/8			
Height	32 5/8				32 5/8				32 5/8				32 5/8			
OPERATING WT. (lbs.)	470				598				632				665			
COMPRESSORS																
Type	Scroll				Scroll				Scroll				2-stage scroll			
Quantity	1				1				1				1			
Unit Capacity Steps (%)	100				100				100				67/100			
CONDENSER COIL DATA																
Face area (Sq. Ft.)	16.3				16.3				16.3				16.3			
Rows	1				1				1				1			
Fins per inch	23				23				23				23			
Tube diameter (in.)	0.71 / 18				0.71 / 18				1.00 / 25.4				1.00 / 25.4			
Circuitry Type	2-pass Microchannel				2-pass Microchannel				2-pass Microchannel				2-pass Microchannel			

ZE036-072 Physical Data (Continued)

Component	Models							
	ZE036		ZE048		ZE060		ZE072	
Nominal Tonnage	**3**		**4**		**5**		**6**	
EVAPORATOR COIL DATA								
Face area (Sq. Ft.)	5.06		5.06		5.06		5.01	
Rows	3		4		4		4	
Fins per inch	13		13		13		13	
Tube diameter	0.375		0.375		0.375		0.375	
Circuitry Type	Intertwined		Intertwined		Intertwined		Intertwined	
Refrigerant control	Orifice		Orifice		TXV		TXV	
CONDENSER FAN DATA								
Quantity of fans	1		1		1		1	
Fan diameter (Inch)	24		24		24		24	
Type	Prop		Prop		Prop		Prop	
Drive type	Direct		Direct		Direct		Direct	
Quantity of motors	1		1		1		1	
Motor HP each	1/2		1/2		1/2[4]		1/2[4]	
No. speeds	1		1		1		2	
RPM	1090		1090		1100		900 / 1150	
CFM	4000		4000		4200		3300 / 4200	
BELT DRIVE EVAP FAN DATA								
Quantity	1		1		1		1	
Fan Size (Inch)	11 x 10		11 x 10		11 x 10		11 x 10	
Type	Centrifugal		Centrifugal		Centrifugal		Centrifugal	
Motor Sheave	1VL44	1VP56	1VL44	1VP56	1VL44	1VP56	VL44	1VP56
Blower Sheave	AK64	AK66	AK56	AK61	AK56	AK56	AK56	AK56
Belt	A37	A39	A36	A38	A36	A38	A36	A38
Motor HP each	1-1/2	1-1/2	1-1/2	1-1/2	1-1/2	2	1-1/2	3
RPM	1740		1740		1740		1740	
Frame size	56		56		56		56	
DIRECT DRIVE EVAP FAN DATA[5]								
Quantity	1		1		1		-	
Fan Size (Inch)	11 x 10		11 x 10		11 x 10		-	
Type	Centrifugal		Centrifugal		Centrifugal		-	
Motor HP each	3/4		1		1		-	
RPM	1050		1050		1050		-	
FILTERS							-	
15" x 20" x 1" or 2"	2		2		2		2	
14" x 25" x 1" or 2"	1		1		1		1	

NOTE: All 2 Stage Gas Heat, 60% Capacity 1st Stage , 40% 2nd Stage

1. Cooling Only Unit or cooling Unit with Electric Heat
2. Cooling Unit with Gas Heat
3. FER or Fan Energy Rating is a Department of Energy (DOE) requirement for single phase gas/electric product rated 65K or less of cooling capacity. DOE ruling effective 7/2019.
4. ECM O.D. Fan Motor
5. Only Available On 208/230 Volt Models

XN036-060 Physical Data

Component	Models		
	XN036	XN048	XN060
Nominal Tonnage	**3**	**4**	**5**
AHRI COOLING PERFORMANCE			
Gross Capacity @ AHRI A point (Btu)	38,400	48,700	57,500
AHRI net capacity (MBH)	37,000	47,000	55,400
EER	12.0	11.8	11.0
SEER	14.0	14.0	14.0
CFM	1200	1450	1275/1850
System power (KW)	3.08	3.98	5.04
Refrigerant type	R-410A	R-410A	R-410A
Refrigerant charge (lb-oz)			
System 1	13-8	13-10	11-10
ARI HEATING PERFORMANCE			
47ºF capacity rating (MBH)	36,000	44,000	51,500
System power (KW) / COP	3.15 (kW) / 3.35	4.03 (kW) / 3.20	4.5 (kW) / 3.35
17ºF capacity rating (MBH)	19,000	24,900	30,000
System power (KW) / COP	2.5 (kW) / 2.2	3.48 (kW) / 2.10	4.11 (kW) / 2.14
HSPF (Btu/Watts-hr)	8.00	8.00	8.00
DIMENSIONS (inches)			
Length	82-1/4	82-1/4	82-1/4
Width	44-7/8	44-7/8	44-7/8
Height	32-5/8	32-5/8	32-5/8
OPERATING WT. (lbs.)	610	616	620
COMPRESSORS			
Type	Scroll	Scroll	Scroll[1]
Quantity	1	1	1
CONDENSER COIL DATA			
Face area (Sq. Ft.)	16.88	16.88	16.88
Rows	2	2	2
Fins per inch	18	18	18
Tube diameter	3/8	3/8	3/8
Circuitry Type	Split-face	Split-face	Split-face
Refrigerant control	TXV	TXV	TXV
EVAPORATOR COIL DATA			
Face area (Sq. Ft.)	5.06	5.06	5.06
Rows	4	4	4
Fins per inch	13	13	13
Tube diameter	0.375	0.375	0.375
Circuitry Type	Split-face	Split-face	Split-face
Refrigerant control	TXV	TXV	TXV

XN036-060 Physical Data (Continued)

Component	Models					
	XN036		XN048		XN060	
Nominal Tonnage	**3**		**4**		**5**	
CONDENSER FAN DATA						
Quantity	1		1		1	
Fan diameter (Inch)	24		24		24	
Type	Prop		Prop		Prop	
Drive type	Direct		Direct		Direct	
No. speeds	1		1		2	
Number of motors	1		1		1	
Motor HP each	1/4		1/3[2]		1/3[2]	
RPM	850		850		850/1100	
CFM	3000		3300		2800/3800	
BELT DRIVE EVAP FAN DATA						
Quantity	1		1		1	
Fan diameter (Inch)	11 x 10		11 x 10		11 x 10	
Type	Centrifugal		Centrifugal		Centrifugal	
Motor Sheave	1VL44	1VP56	1VL44	1VP56	1VL44	1VP56
Blower Sheave	AK64	AK66	AK56	AK61	AK56	AK56
Belt	A37	A39	A36	A38	A36	A38
Motor HP each	1-1/2	1-1/2	1-1/2	1-1/2	1-1/2[3]	2[3]
RPM	1740		1740		1740	
Frame size	56		56		56	
DIRECT DRIVE EVAP FAN DATA[4]						
Quantity	1		1		1	
Fan Size (Inch)	11 x 10		11 x 10		11 x 10	
Type	Centrifugal		Centrifugal		Centrifugal	
Motor HP each	3/4		1		1	
RPM	1050		1050		1050	
FILTERS						
15" x 20" x 1" or 2"	2		2		2	
14" x 25" x 1" or 2"	1		1		1	

1. 2-Speed Scroll Compressor
2. ECM O. D. Fan Motor
3. I. D. Fan Motor with VFD
4. Only available On 208/230 Volt Models

ZE/XN036-072 Unit Limitations

Size (Tons)	Unit Voltage	SCCR (kVA)	Unit Limitations		
			Applied Voltage		Outdoor DB Temp
			Min	Max	Max (°F)
ZE/XN036 (3.0)	208/230-1-60	5	187	252	125
	208/230-3-60	5	187	252	125
	460-3-60	5	432	504	125
	575-3-60	5	540	630	125
ZE/XN048 (4.0)	208/230-1-60	5	187	252	125
	208/230-3-60	5	187	252	125
	460-3-60	5	432	504	125
	575-3-60	5	540	630	125
ZE/XN060 (5.0)	208/230-1-60	5	187	252	125
	208/230-3-60	5	187	252	125
	460-3-60	5	432	504	125
	575-3-60	5	540	630	125
ZE072 (6.0)	208/230-3-60	5	187	252	125
	460-3-60	5	432	504	125
	575-3-60	5	540	630	125

Capacity Performance

ZE036-072 Cooling Capacities

ZE036 (3.0 Ton)

Air on Evaporator Coil		Temperature of Air on Condenser Coil															
		Total Capacity[1] (MBh)	Total Input (kW)[2]	Sensible Capacity (MBh) Return Dry Bulb (°F)						Total Capacity[1] (MBh)	Total Input (kW)[2]	Sensible Capacity (MBh) Return Dry Bulb (°F)					
CFM	WB (°F)			90	85	80	75	70	65			90	85	80	75	70	65
		75°F								85°F							
750	77	44.0	2.0	19.5	16.3	13.2	-	-	-	42.2	2.3	18.7	15.6	12.5	-	-	-
	72	41.5	2.0	24.6	21.5	18.3	15.2	-	-	39.2	2.2	23.6	20.4	17.3	14.1	-	-
	67	39.1	2.0	29.7	26.6	23.4	20.3	17.2	-	36.2	2.2	28.4	25.2	22.1	18.9	15.8	-
	62	36.2	1.9	36.2	31.7	28.5	25.4	22.2	19.1	33.4	2.2	33.4	31.1	26.9	23.8	20.6	17.5
900	77	45.5	2.0	21.4	17.9	14.3	-	-	-	43.7	2.3	20.8	17.2	13.6	-	-	-
	72	43.0	2.0	27.0	23.4	19.9	16.3	-	-	40.6	2.2	26.1	22.5	18.9	15.3	-	-
	67	40.5	2.0	32.6	29.0	25.4	21.9	18.3	-	37.5	2.2	31.3	27.7	24.1	20.5	16.9	-
	62	37.5	1.9	37.5	34.5	31.0	27.4	23.8	20.2	34.6	2.2	34.6	33.0	29.4	25.8	22.2	18.6
	57	35.9	1.9	35.9	35.9	34.3	30.7	27.1	23.5	34.1	2.2	34.1	34.1	31.2	27.6	24.0	20.4
1050	77	47.1	2.0	23.4	19.4	15.4	-	-	-	45.3	2.3	22.9	18.9	14.8	-	-	-
	72	44.5	2.0	29.4	25.4	21.4	17.4	-	-	42.0	2.2	28.6	24.6	20.5	16.4	-	-
	67	41.9	1.9	35.4	31.4	27.4	23.4	19.5	-	38.8	2.2	34.3	30.3	26.2	22.1	18.1	-
	62	38.8	1.9	38.8	37.3	33.4	29.4	25.4	21.4	35.8	2.2	35.8	35.0	31.9	27.9	23.8	19.7
	57	37.1	1.9	37.1	37.1	37.0	33.0	29.0	25.0	35.3	2.2	35.3	35.3	33.8	29.8	25.7	21.6
1200	77	48.7	2.0	25.4	21.0	16.5	-	-	-	46.8	2.3	25.0	20.5	15.9	-	-	-
	72	46.0	1.9	31.8	27.4	23.0	18.6	-	-	43.4	2.2	31.2	26.6	22.1	17.6	-	-
	67	43.3	1.9	38.3	33.9	29.4	25.0	20.6	-	40.1	2.2	37.3	32.8	28.3	23.7	19.2	-
	62	40.1	1.9	40.1	40.1	35.8	31.4	27.0	22.6	37.0	2.2	37.0	37.0	34.5	29.9	25.4	20.9
	57	38.4	1.9	38.4	38.4	38.4	35.3	30.8	26.4	36.5	2.2	36.5	36.5	36.5	32.0	27.4	22.9
1350	72	47.4	1.9	35.0	30.4	25.7	21.1	-	-	44.2	2.2	33.4	28.5	23.5	18.6	-	-
	67	44.6	1.9	42.1	37.6	32.9	28.3	23.6	-	40.8	2.2	39.5	35.0	30.1	25.2	20.2	-
	62	41.3	1.9	41.3	41.3	39.5	34.9	30.2	25.6	37.7	2.2	37.7	37.7	36.4	31.5	26.6	21.6
	57	39.5	1.9	39.5	39.5	39.5	36.2	31.5	26.9	37.2	2.2	37.2	37.2	37.2	32.2	27.3	22.4
1500	72	48.8	1.9	38.2	33.3	28.5	23.6	-	-	45.1	2.2	35.7	30.3	25.0	19.6	-	-
	67	45.9	1.9	45.9	41.3	36.4	31.6	26.7	-	41.6	2.2	41.6	37.3	31.9	26.6	21.3	-
	62	42.5	1.9	42.5	42.5	42.5	38.4	33.5	28.7	38.4	2.2	38.4	38.4	38.4	33.1	27.7	22.4
	57	40.7	1.9	40.7	40.7	40.7	37.1	32.2	27.4	37.9	2.2	37.9	37.9	37.9	32.5	27.2	21.8
		95°F								105°F							
750	77	40.5	2.5	18.0	14.9	11.7	-	-	-	36.0	2.9	13.6	11.5	8.5	-	-	-
	72	36.9	2.5	22.5	19.4	16.2	13.1	-	-	33.0	2.9	19.9	16.8	13.7	10.7	-	-
	67	33.3	2.5	27.0	23.8	20.7	17.6	14.5	-	30.0	2.9	26.1	22.0	19.0	15.9	12.8	-
	62	30.6	2.5	30.6	30.4	25.3	22.2	19.1	15.9	27.7	2.9	27.7	27.5	22.5	19.4	16.3	13.3
900	77	42.0	2.5	20.2	16.6	13.0	-	-	-	37.3	2.9	16.6	13.0	9.4	-	-	-
	72	38.2	2.5	25.2	21.5	17.9	14.3	-	-	34.2	2.9	22.5	18.9	15.3	11.7	-	-
	67	34.5	2.5	30.1	26.5	22.8	19.2	15.6	-	31.1	2.9	28.4	24.8	21.2	17.5	13.9	-
	62	31.7	2.5	31.7	31.5	27.9	24.3	20.6	17.0	28.6	2.9	28.6	28.6	25.0	21.4	17.8	14.2
	57	32.4	2.5	32.4	31.7	28.1	24.4	20.8	17.2	29.1	2.9	29.1	28.7	25.1	21.5	17.8	14.2
1050	77	43.4	2.5	22.4	18.3	14.2	-	-	-	38.5	2.9	19.6	14.5	10.3	-	-	-
	72	39.5	2.5	27.8	23.7	19.6	15.4	-	-	35.3	2.9	25.1	21.0	16.8	12.7	-	-
	67	35.7	2.5	33.2	29.1	25.0	20.8	16.7	-	32.1	2.9	30.7	27.5	23.3	19.2	15.0	-
	62	32.8	2.5	32.8	32.7	30.5	26.4	22.2	18.1	29.6	2.8	29.6	29.6	27.6	23.5	19.3	15.2
	57	33.5	2.5	33.5	33.1	30.7	26.5	22.4	18.3	30.1	2.8	30.1	29.9	27.6	23.5	19.3	15.2
1200	77	44.9	2.5	24.6	20.0	15.4	-	-	-	39.8	2.9	22.6	16.0	11.3	-	-	-
	72	40.9	2.5	30.5	25.8	21.2	16.6	-	-	36.5	2.9	27.8	23.1	18.4	13.7	-	-
	67	36.9	2.5	36.3	31.7	27.1	22.4	17.8	-	33.2	2.9	32.9	30.2	25.5	20.8	16.1	-
	62	33.9	2.5	33.9	33.9	33.1	28.4	23.8	19.2	30.6	2.8	30.6	30.6	30.2	25.5	20.8	16.1
	57	34.6	2.5	34.6	34.6	33.3	28.6	24.0	19.4	31.1	2.8	31.1	31.1	30.2	25.5	20.8	16.1
1350	72	41.1	2.6	31.8	26.6	21.4	16.1	-	-	36.8	2.9	29.4	24.1	18.9	13.7	-	-
	67	37.1	2.5	36.8	32.5	27.3	22.0	16.8	-	33.5	2.9	33.3	31.0	26.3	21.1	15.9	-
	62	34.1	2.5	34.1	34.1	33.3	28.1	22.9	17.7	30.9	2.9	30.9	30.9	30.5	25.2	20.0	14.8
	57	34.8	2.5	34.8	34.8	33.5	28.3	23.1	17.8	31.4	2.9	31.4	31.4	30.6	25.4	20.2	14.9
1500	72	41.3	2.6	33.1	27.3	21.5	15.7	-	-	37.1	2.9	31.0	25.2	19.5	13.7	-	-
	67	37.3	2.6	37.3	33.3	27.4	21.6	15.8	-	33.8	2.9	33.8	31.7	27.1	21.4	15.6	-
	62	34.3	2.5	34.3	34.3	33.5	27.7	21.9	16.1	31.1	2.9	31.1	31.1	30.8	25.0	19.2	13.5
	57	35.0	2.5	35.0	35.0	33.7	27.9	22.1	16.3	31.7	2.9	31.7	31.7	31.0	25.3	19.5	13.8

ZE036 (3.0 Ton) (Continued)

Air on Evaporator Coil		Temperature of Air on Condenser Coil															
		Total Capacity[1] (MBh)	Total Input (kW)[2]	Sensible Capacity (MBh) Return Dry Bulb (°F)						Total Capacity[1] (MBh)	Total Input (kW)[2]	Sensible Capacity (MBh) Return Dry Bulb (°F)					
CFM	WB (°F)			90	85	80	75	70	65			90	85	80	75	70	65
		115°F								125°F							
750	77	31.5	3.3	9.2	8.2	5.2	-	-	-	27.0	3.7	5.7	4.1	1.9	-	-	-
	72	29.1	3.3	17.2	14.2	11.2	8.2	-	-	25.2	3.6	14.6	11.6	8.7	5.7	-	-
	67	26.7	3.2	25.2	20.2	17.2	14.2	11.2	-	23.4	3.6	23.4	18.4	15.5	12.6	9.6	-
	62	24.7	3.3	24.7	24.7	19.6	16.6	13.6	10.6	21.8	3.6	21.8	21.8	16.8	13.9	10.9	8.0
900	77	32.6	3.3	13.0	9.4	5.8	-	-	-	27.9	3.7	10.1	5.9	2.3	-	-	-
	72	30.1	3.2	19.8	16.2	12.7	9.1	-	-	26.1	3.6	17.2	13.6	10.0	6.5	-	-
	67	27.7	3.2	26.6	23.1	19.5	15.9	12.3	-	24.2	3.6	24.2	21.4	17.8	14.2	10.7	-
	62	25.6	3.2	25.6	25.6	22.2	18.6	15.0	11.4	22.5	3.6	22.5	22.5	19.3	15.8	12.2	8.6
	57	25.9	3.2	25.9	25.7	22.1	18.5	14.9	11.3	22.7	3.6	22.7	22.6	19.1	15.5	11.9	8.4
1050	77	33.7	3.3	16.8	10.7	6.5	-	-	-	28.8	3.6	14.5	7.6	2.7	-	-	-
	72	31.1	3.2	22.5	18.3	14.1	9.9	-	-	26.9	3.6	19.8	15.6	11.4	7.2	-	-
	67	28.6	3.2	28.1	25.9	21.7	17.5	13.4	-	25.0	3.6	25.0	24.3	20.1	15.9	11.7	-
	62	26.4	3.2	26.4	26.4	24.7	20.6	16.4	12.2	23.3	3.6	23.3	23.3	21.8	17.7	13.5	9.3
	57	26.8	3.2	26.8	26.7	24.6	20.4	16.3	12.1	23.4	3.6	23.4	23.4	21.6	17.4	13.2	9.0
1200	77	34.8	3.3	20.6	11.9	7.2	-	-	-	29.8	3.6	18.9	9.3	3.1	-	-	-
	72	32.2	3.2	25.1	20.3	15.6	10.8	-	-	27.8	3.6	22.4	17.6	12.7	7.9	-	-
	67	29.5	3.2	29.5	28.7	23.9	19.2	14.4	-	25.8	3.5	25.8	25.8	22.4	17.6	12.7	-
	62	27.3	3.2	27.3	27.3	27.3	22.5	17.8	13.0	24.0	3.6	24.0	24.0	24.0	19.6	14.7	9.9
	57	27.7	3.2	27.7	27.7	27.1	22.4	17.6	12.9	24.2	3.5	24.2	24.2	24.1	19.2	14.4	9.6
1350	72	32.5	3.3	26.9	21.7	16.5	11.3	-	-	28.3	3.6	24.5	19.3	14.1	8.8	-	-
	67	29.9	3.2	29.9	29.5	25.4	20.1	14.9	-	26.3	3.6	26.3	26.3	24.4	19.2	14.0	-
	62	27.6	3.2	27.6	27.6	27.6	22.4	17.2	11.9	24.4	3.6	24.4	24.4	24.4	19.5	14.3	9.1
	57	28.0	3.2	28.0	28.0	27.7	22.5	17.3	12.0	24.6	3.6	24.6	24.6	24.6	19.6	14.4	9.1
1500	72	32.9	3.3	28.8	23.1	17.4	11.7	-	-	28.7	3.6	26.7	21.0	15.4	9.7	-	-
	67	30.2	3.3	30.2	30.2	26.8	21.1	15.4	-	26.7	3.6	26.7	26.7	26.5	20.8	15.2	-
	62	28.0	3.3	28.0	28.0	28.0	22.3	16.6	10.9	24.8	3.6	24.8	24.8	24.8	19.5	13.9	8.2
	57	28.3	3.3	28.3	28.3	28.3	22.6	16.9	11.2	25.0	3.6	25.0	25.0	25.0	20.0	14.3	8.7

1. These capacities are gross ratings. For net capacity, deduct air blower motor, MBh = 3.415 x kW. Refer to the appropriate Blower Performance Table for the kW of the supply air blower motor.
2. These ratings include the condenser fan motors (total 1 kW) and the compressor motors but not the supply air blower motor.

ZE048 (4.0 Ton)

Air on Evaporator Coil		Temperature of Air on Condenser Coil															
		Total Capacity[1] (MBh)	Total Input (kW)[2]	Sensible Capacity (MBh)						Total Capacity[1] (MBh)	Total Input (kW)[2]	Sensible Capacity (MBh)					
CFM	WB (°F)			Return Dry Bulb (°F)								Return Dry Bulb (°F)					
				90	85	80	75	70	65			90	85	80	75	70	65
		75°F								85°F							
1000	77	60.0	2.6	27.4	22.9	18.4	-	-	-	58.1	3.1	26.4	22.0	17.5	-	-	-
	72	56.4	2.5	34.3	29.8	25.3	20.8	-	-	54.1	3.0	33.1	28.6	24.2	19.7	-	-
	67	52.8	2.4	41.1	36.6	32.1	27.6	23.1	-	50.1	2.9	39.7	35.3	30.8	26.4	22.0	-
	62	48.4	2.4	48.4	43.6	38.7	34.2	29.7	25.2	45.8	2.9	45.8	43.4	37.4	33.0	28.6	24.1
1200	77	62.1	2.7	30.0	25.0	20.0	-	-	-	59.8	3.1	29.0	24.0	19.0	-	-	-
	72	58.3	2.6	37.4	32.4	27.4	22.3	-	-	55.7	3.0	36.2	31.2	26.2	21.1	-	-
	67	54.6	2.5	44.8	39.8	34.8	29.7	24.7	-	51.6	3.0	43.4	38.4	33.4	28.3	23.3	-
	62	50.1	2.5	50.1	46.9	41.9	36.9	31.9	26.8	47.1	2.9	47.1	45.5	40.5	35.5	30.4	25.4
	57	47.7	2.4	47.7	47.7	44.8	39.8	34.8	29.7	46.1	2.9	46.1	46.1	42.4	37.3	32.3	27.3
1400	77	64.2	2.7	32.6	27.0	21.5	-	-	-	61.6	3.2	31.6	26.0	20.4	-	-	-
	72	60.3	2.6	40.5	35.0	29.5	23.9	-	-	57.3	3.1	39.4	33.8	28.1	22.5	-	-
	67	56.5	2.6	48.5	43.0	37.4	31.9	26.3	-	53.1	3.0	47.1	41.5	35.9	30.3	24.6	-
	62	51.7	2.5	51.7	50.2	45.1	39.5	34.0	28.5	48.5	3.0	48.5	47.7	43.6	37.9	32.3	26.7
	57	49.3	2.4	49.3	49.3	48.2	42.7	37.1	31.6	47.4	2.9	47.4	47.4	45.6	40.0	34.3	28.7
1600	77	66.3	2.8	35.1	29.1	23.0	-	-	-	63.3	3.2	34.3	28.0	21.8	-	-	-
	72	62.3	2.7	43.7	37.6	31.5	25.5	-	-	58.9	3.1	42.6	36.3	30.1	23.9	-	-
	67	58.3	2.6	52.2	46.1	40.1	34.0	28.0	-	54.5	3.1	50.8	44.6	38.4	32.2	26.0	-
	62	53.4	2.6	53.4	53.4	48.3	42.2	36.2	30.1	49.9	3.0	49.9	49.9	46.6	40.4	34.2	28.0
	57	50.9	2.5	50.9	50.9	50.9	45.6	39.5	33.4	48.8	3.0	48.8	48.8	48.8	42.6	36.3	30.1
1800	72	63.7	2.7	46.3	39.8	33.2	26.6	-	-	60.0	3.2	45.7	38.9	32.1	25.2	-	-
	67	59.6	2.6	56.6	48.7	42.1	35.5	29.0	-	55.5	3.1	53.6	47.7	40.9	34.1	27.2	-
	62	54.7	2.6	54.7	54.7	52.1	45.5	38.9	32.3	50.7	3.0	50.7	50.7	49.1	42.3	35.4	28.6
	57	52.1	2.5	52.1	52.1	52.1	45.9	39.3	32.7	49.6	3.0	49.6	49.6	49.6	42.8	36.0	29.1
2000	72	65.2	2.7	49.0	41.9	34.8	27.7	-	-	61.0	3.2	48.9	41.5	34.0	26.6	-	-
	67	61.0	2.6	61.0	51.3	44.2	37.1	30.0	-	56.4	3.1	56.4	50.8	43.4	36.0	28.5	-
	62	55.9	2.6	55.9	55.9	55.9	48.8	41.7	34.5	51.6	3.1	51.6	51.6	51.6	44.2	36.7	29.3
	57	53.3	2.5	53.3	53.3	53.3	46.1	39.0	31.9	50.5	3.0	50.5	50.5	50.5	43.0	35.6	28.1
		95°F								105°F							
1000	77	56.3	3.6	25.4	21.0	16.6	-	-	-	52.0	4.1	21.4	18.5	14.2	-	-	-
	72	51.8	3.5	31.9	27.5	23.1	18.7	-	-	47.3	4.0	29.3	25.0	20.7	16.4	-	-
	67	47.3	3.4	38.3	34.0	29.6	25.2	20.8	-	42.7	3.9	37.1	31.5	27.2	22.9	18.6	-
	62	43.2	3.4	43.2	43.1	36.2	31.8	27.4	23.1	39.2	3.9	39.2	39.2	32.4	28.1	23.8	19.5
1200	77	57.6	3.6	28.1	23.0	18.0	-	-	-	53.3	4.2	25.6	20.5	15.5	-	-	-
	72	53.1	3.5	35.1	30.0	25.0	19.9	-	-	48.6	4.1	32.7	27.7	22.6	17.6	-	-
	67	48.5	3.4	42.1	37.0	32.0	26.9	21.9	-	43.8	4.0	39.9	34.8	29.8	24.8	19.7	-
	62	44.2	3.4	44.2	44.2	39.1	34.1	29.0	24.0	40.2	3.9	40.2	40.2	35.5	30.4	25.4	20.4
	57	44.6	3.4	44.6	44.6	40.0	34.9	29.9	24.8	41.0	3.9	41.0	40.8	36.0	31.0	26.0	21.0
1400	77	59.0	3.6	30.7	25.0	19.3	-	-	-	54.7	4.2	29.7	22.6	16.8	-	-	-
	72	54.3	3.5	38.2	32.5	26.8	21.1	-	-	49.8	4.1	36.2	30.4	24.6	18.8	-	-
	67	49.6	3.5	45.8	40.1	34.3	28.6	22.9	-	45.0	4.0	42.6	38.2	32.4	26.6	20.9	-
	62	45.3	3.4	45.3	45.2	42.0	36.3	30.6	24.9	41.3	4.0	41.3	41.3	38.5	32.8	27.0	21.2
	57	45.6	3.4	45.6	45.6	43.0	37.2	31.5	25.8	42.1	3.9	42.1	42.0	39.2	33.4	27.6	21.9
1600	77	60.4	3.6	33.4	27.0	20.6	-	-	-	56.0	4.2	33.8	24.7	18.2	-	-	-
	72	55.6	3.6	41.4	35.1	28.7	22.3	-	-	51.1	4.1	39.6	33.1	26.6	20.1	-	-
	67	50.8	3.5	49.5	43.1	36.7	30.3	24.0	-	46.1	4.0	45.4	41.5	35.0	28.5	22.0	-
	62	46.3	3.4	46.3	46.3	45.0	38.6	32.2	25.8	42.3	4.0	42.3	42.3	41.6	35.1	28.6	22.1
	57	46.7	3.4	46.7	46.7	45.9	39.6	33.2	26.8	43.1	4.0	43.1	43.1	42.3	35.8	29.3	22.8
1800	72	56.2	3.6	45.1	38.1	31.0	23.9	-	-	51.9	4.1	43.0	35.9	28.7	21.5	-	-
	67	51.3	3.5	50.7	46.7	39.7	32.6	25.5	-	46.8	4.0	46.5	44.1	37.8	30.6	23.5	-
	62	46.8	3.5	46.8	46.8	46.1	39.1	32.0	24.9	42.9	4.0	42.9	42.9	42.6	35.4	28.3	21.1
	57	47.2	3.5	47.2	47.2	46.8	39.7	32.7	25.6	43.8	4.0	43.8	43.8	43.4	36.2	29.1	21.9
2000	72	56.8	3.6	48.8	41.1	33.3	25.5	-	-	52.6	4.2	46.5	38.7	30.8	23.0	-	-
	67	51.9	3.5	51.9	50.4	42.6	34.8	27.1	-	47.5	4.1	47.5	46.8	40.6	32.8	25.0	-
	62	47.3	3.5	47.3	47.3	47.3	39.5	31.8	24.0	43.6	4.0	43.6	43.6	43.6	35.8	28.0	20.2
	57	47.7	3.5	47.7	47.7	47.7	39.9	32.1	24.4	44.5	4.0	44.5	44.5	44.5	36.7	28.8	21.0

ZE048 (4.0 Ton) (Continued)

Air on Evaporator Coil		Temperature of Air on Condenser Coil															
		Total Capacity[1] (MBh)	Total Input (kW)[2]	Sensible Capacity (MBh) Return Dry Bulb (°F)						Total Capacity[1] (MBh)	Total Input (kW)[2]	Sensible Capacity (MBh) Return Dry Bulb (°F)					
CFM	WB (°F)			90	85	80	75	70	65			90	85	80	75	70	65
		115°F								125°F							
1000	77	47.6	4.7	17.5	15.9	11.7	-	-	-	43.3	5.3	14.6	12.5	9.3	-	-	-
	72	42.9	4.6	26.6	22.5	18.3	14.1	-	-	38.4	5.2	24.0	19.9	15.9	11.8	-	-
	67	38.1	4.5	35.8	29.0	24.8	20.6	16.5	-	33.5	5.0	33.5	26.5	22.5	18.4	14.3	-
	62	35.3	4.4	35.3	35.3	28.6	24.4	20.2	16.0	31.3	5.0	31.3	31.3	24.7	20.7	16.6	12.5
1200	77	49.0	4.7	23.0	18.0	13.0	-	-	-	44.7	5.3	21.4	15.6	10.6	-	-	-
	72	44.1	4.6	30.3	25.3	20.3	15.3	-	-	39.6	5.2	28.0	23.0	18.0	13.0	-	-
	67	39.2	4.5	37.6	32.6	27.6	22.6	17.6	-	34.6	5.1	34.6	30.5	25.5	20.5	15.5	-
	62	36.3	4.5	36.3	36.3	31.8	26.8	21.8	16.8	32.3	5.0	32.3	32.3	28.1	23.2	18.2	13.2
	57	37.5	4.4	37.5	37.1	32.1	27.1	22.1	17.1	34.0	4.9	34.0	33.4	28.2	23.2	18.2	13.2
1400	77	50.3	4.8	28.6	20.2	14.4	-	-	-	46.0	5.4	28.3	18.6	11.9	-	-	-
	72	45.3	4.7	34.1	28.2	22.4	16.6	-	-	40.8	5.2	32.0	26.1	20.2	14.3	-	-
	67	40.3	4.6	39.5	36.3	30.5	24.6	18.8	-	35.6	5.1	35.6	34.4	28.5	22.6	16.8	-
	62	37.3	4.5	37.3	37.3	35.0	29.2	23.4	17.6	33.3	5.0	33.3	33.3	31.5	25.7	19.8	13.9
	57	38.6	4.4	38.6	38.3	35.4	29.5	23.7	17.9	35.0	5.0	35.0	34.7	31.6	25.7	19.8	14.0
1600	77	51.7	4.8	34.1	22.3	15.7	-	-	-	47.4	5.4	35.2	21.6	13.2	-	-	-
	72	46.5	4.7	37.8	31.1	24.5	17.8	-	-	42.0	5.3	35.9	29.1	22.4	15.6	-	-
	67	41.4	4.6	41.4	39.9	33.3	26.6	20.0	-	36.7	5.1	36.7	36.7	31.5	24.8	18.0	-
	62	38.3	4.5	38.3	38.3	38.3	31.6	25.0	18.4	34.3	5.1	34.3	34.3	34.3	28.2	21.4	14.6
	57	39.6	4.5	39.6	39.6	38.6	32.0	25.4	18.7	36.0	5.0	36.0	36.0	35.0	28.2	21.5	14.7
1800	72	47.5	4.7	40.9	33.7	26.4	19.2	-	-	43.2	5.3	38.8	31.5	24.2	16.8	-	-
	67	42.2	4.6	42.2	41.5	35.9	28.7	21.4	-	37.7	5.1	37.7	37.7	34.1	26.7	19.4	-
	62	39.1	4.5	39.1	39.1	39.1	31.8	24.6	17.3	35.2	5.1	35.2	35.2	35.2	28.2	20.9	13.6
	57	40.4	4.5	40.4	40.4	39.9	32.7	25.5	18.2	37.0	5.0	37.0	37.0	36.5	29.2	21.9	14.5
2000	72	48.5	4.7	44.1	36.3	28.4	20.5	-	-	44.4	5.2	41.8	33.9	26.0	18.1	-	-
	67	43.1	4.6	43.1	43.1	38.6	30.7	22.9	-	38.7	5.1	38.7	38.7	36.6	28.7	20.8	-
	62	39.9	4.5	39.9	39.9	39.9	32.0	24.2	16.3	36.2	5.1	36.2	36.2	36.2	28.3	20.4	12.5
	57	41.3	4.5	41.3	41.3	41.3	33.4	25.5	17.7	38.0	5.0	38.0	38.0	38.0	30.1	22.2	14.4

1. These capacities are gross ratings. For net capacity, deduct air blower motor, MBh = 3.415 x kW. Refer to the appropriate Blower Performance Table for the kW of the supply air blower motor.
2. These ratings include the condenser fan motors (total 1 kW) and the compressor motors but not the supply air blower motor.

ZE060 (5.0 Ton)

Air on Evaporator Coil		Temperature of Air on Condenser Coil															
		Total Capacity[1] (MBh)	Total Input (kW)[2]	Sensible Capacity (MBh) Return Dry Bulb (°F)						Total Capacity[1] (MBh)	Total Input (kW)[2]	Sensible Capacity (MBh) Return Dry Bulb (°F)					
CFM	WB (°F)			90	85	80	75	70	65			90	85	80	75	70	65
		75°F								85°F							
1250	77	74.6	3.2	34.0	28.7	23.4	-	-	-	70.6	3.8	31.6	26.4	21.1	-	-	-
	72	69.2	3.2	42.2	36.9	31.6	26.3	-	-	65.3	3.7	39.7	34.4	29.2	23.9	-	-
	67	63.8	3.2	50.4	45.1	39.8	34.5	29.2	-	60.1	3.7	47.7	42.5	37.2	32.0	26.7	-
	62	58.4	3.1	58.4	56.3	48.8	43.5	38.2	32.9	55.1	3.7	55.1	53.7	45.6	40.4	35.1	29.9
1500	77	76.5	3.3	37.3	31.2	25.1	-	-	-	72.4	3.8	35.0	29.0	23.0	-	-	-
	72	71.0	3.2	46.1	40.0	33.9	27.9	-	-	67.1	3.7	43.8	37.7	31.7	25.7	-	-
	67	65.4	3.2	54.9	48.8	42.8	36.7	30.6	-	61.7	3.7	52.5	46.5	40.5	34.5	28.5	-
	62	59.9	3.2	59.9	58.5	52.4	46.4	40.3	34.2	56.6	3.7	56.6	55.6	49.6	43.6	37.6	31.6
	57	59.0	3.1	59.0	59.0	54.1	48.0	41.9	35.9	56.2	3.7	56.2	56.2	50.6	44.5	38.5	32.5
1750	77	78.4	3.3	40.6	33.7	26.9	-	-	-	74.3	3.8	38.4	31.6	24.9	-	-	-
	72	72.7	3.3	50.0	43.1	36.3	29.5	-	-	68.8	3.8	47.8	41.1	34.3	27.5	-	-
	67	67.1	3.2	59.4	52.5	45.7	38.9	32.1	-	63.3	3.7	57.3	50.5	43.8	37.0	30.2	-
	62	61.4	3.2	61.4	60.7	56.1	49.2	42.4	35.6	58.1	3.7	58.1	57.6	53.6	46.9	40.1	33.3
	57	60.5	3.2	60.5	60.5	57.8	51.0	44.2	37.4	57.7	3.7	57.7	57.7	54.6	47.9	41.1	34.3
2000	77	80.3	3.3	43.8	36.3	28.7	-	-	-	76.1	3.8	41.8	34.2	26.7	-	-	-
	72	74.5	3.3	53.9	46.3	38.7	31.1	-	-	70.5	3.8	51.9	44.4	36.9	29.4	-	-
	67	68.7	3.2	63.9	56.3	48.7	41.1	33.6	-	64.9	3.8	62.1	54.6	47.0	39.5	32.0	-
	62	62.8	3.2	62.8	62.8	59.7	52.1	44.6	37.0	59.5	3.7	59.5	59.5	57.7	50.1	42.6	35.1
	57	62.0	3.2	62.0	62.0	61.6	54.0	46.5	38.9	59.1	3.7	59.1	59.1	58.7	51.2	43.7	36.2
2250	72	81.4	2.6	59.5	51.3	43.0	34.7	-	-	71.7	3.8	55.7	47.5	39.3	31.1	-	-
	67	75.0	2.6	72.6	63.7	54.1	45.8	37.5	-	66.0	3.8	64.6	58.3	50.1	42.0	33.8	-
	62	68.6	2.5	68.6	68.6	67.1	58.8	50.5	42.2	60.5	3.7	60.5	60.5	59.6	51.4	43.3	35.1
	57	67.8	2.5	67.8	67.8	67.6	59.3	51.0	42.7	60.1	3.7	60.1	60.1	59.9	51.8	43.6	35.4
2500	72	88.2	1.9	65.2	56.2	47.2	38.2	-	-	73.0	3.8	59.4	50.6	41.7	32.9	-	-
	67	81.3	1.9	81.3	71.2	59.6	50.5	41.5	-	67.1	3.8	67.1	62.1	53.2	44.4	35.6	-
	62	74.4	1.9	74.4	74.4	74.4	65.4	56.4	47.4	61.6	3.7	61.6	61.6	61.6	52.7	43.9	35.1
	57	73.6	1.9	73.6	73.6	73.6	64.5	55.5	46.5	61.1	3.7	61.1	61.1	61.1	52.3	43.5	34.7
		95°F								105°F							
1250	77	66.5	4.3	29.3	24.1	18.9	-	-	-	61.4	4.9	24.0	19.8	14.7	-	-	-
	72	61.5	4.2	37.1	32.0	26.8	21.6	-	-	56.9	4.9	34.1	29.0	23.9	18.7	-	-
	67	56.4	4.2	45.0	39.8	34.6	29.4	24.2	-	52.5	4.9	44.2	38.1	33.0	27.9	22.8	-
	62	51.9	4.2	51.9	51.1	42.4	37.3	32.1	26.9	48.7	4.8	48.7	48.3	39.8	34.7	29.6	24.4
1500	77	68.3	4.3	32.7	26.8	20.8	-	-	-	62.8	5.0	27.9	22.1	16.2	-	-	-
	72	63.2	4.3	41.4	35.5	29.5	23.6	-	-	58.3	4.9	38.0	32.2	26.3	20.4	-	-
	67	58.0	4.2	50.1	44.2	38.2	32.3	26.3	-	53.7	4.9	48.1	42.2	36.4	30.5	24.6	-
	62	53.3	4.2	53.3	52.8	46.8	40.9	34.9	29.0	49.9	4.8	49.9	49.6	43.8	38.0	32.1	26.2
	57	53.4	4.2	53.4	53.0	47.1	41.1	35.1	29.2	50.2	4.8	50.2	50.0	44.1	38.3	32.4	26.5
1750	77	70.2	4.3	36.2	29.5	22.8	-	-	-	64.3	5.0	31.9	24.3	17.7	-	-	-
	72	64.9	4.3	45.7	39.0	32.3	25.6	-	-	59.7	5.0	42.0	35.3	28.7	22.1	-	-
	67	59.5	4.3	55.2	48.5	41.8	35.1	28.4	-	55.0	4.9	52.0	46.3	39.7	33.1	26.4	-
	62	54.8	4.2	54.8	54.5	51.2	44.5	37.8	31.1	51.0	4.9	51.0	50.9	47.9	41.2	34.6	28.0
	57	54.8	4.2	54.8	54.6	51.5	44.7	38.0	31.3	51.4	4.9	51.4	51.3	48.2	41.6	34.9	28.3
2000	77	72.0	4.3	39.7	32.2	24.7	-	-	-	65.8	5.0	35.9	26.6	19.2	-	-	-
	72	66.5	4.3	50.0	42.5	35.1	27.6	-	-	61.0	5.0	45.9	38.5	31.1	23.7	-	-
	67	61.1	4.3	60.3	52.9	45.4	37.9	30.4	-	56.3	5.0	55.9	50.4	43.0	35.6	28.3	-
	62	56.2	4.2	56.2	56.2	55.6	48.2	40.7	33.2	52.2	4.9	52.2	52.2	51.9	44.5	37.1	29.7
	57	56.2	4.2	56.2	56.2	55.9	48.4	40.9	33.4	52.6	4.9	52.6	52.6	52.3	44.9	37.5	30.1
2250	72	62.1	5.0	51.8	43.7	35.7	27.6	-	-	59.2	5.3	48.5	40.5	32.4	24.4	-	-
	67	57.0	4.9	56.6	52.9	46.2	38.1	30.0	-	54.6	5.3	54.4	51.7	45.0	37.0	29.0	-
	62	52.5	4.9	52.5	52.5	52.2	44.1	36.1	28.0	50.7	5.2	50.7	50.7	50.5	42.5	34.5	26.5
	57	52.5	4.9	52.5	52.5	52.3	44.2	36.2	28.1	51.1	5.2	51.1	51.1	50.9	42.9	34.9	26.9
2500	72	57.7	5.6	53.5	44.9	36.3	27.6	-	-	57.4	5.6	51.1	42.4	33.8	25.1	-	-
	67	53.0	5.6	53.0	53.0	46.9	38.3	29.6	-	53.0	5.6	53.0	53.0	46.9	38.3	29.6	-
	62	48.7	5.5	48.7	48.7	48.7	40.1	31.4	22.8	49.2	5.5	49.2	49.2	49.2	40.5	31.9	23.2
	57	48.7	5.5	48.7	48.7	48.7	40.1	31.5	22.8	49.6	5.5	49.6	49.6	49.6	40.9	32.3	23.7

ZE060 (5.0 Ton) (Continued)

Air on Evaporator Coil		Temperature of Air on Condenser Coil															
		Total Capacity[1] (MBh)	Total Input (kW)[2]	Sensible Capacity (MBh) Return Dry Bulb (°F)						Total Capacity[1] (MBh)	Total Input (kW)[2]	Sensible Capacity (MBh) Return Dry Bulb (°F)					
CFM	WB (°F)			90	85	80	75	70	65			90	85	80	75	70	65
		115°F								125°F							
1250	77	56.2	5.6	18.7	15.6	10.5	-	-	-	51.0	6.2	13.2	11.3	6.3	-	-	-
	72	52.4	5.6	31.1	26.0	20.9	15.9	-	-	47.8	6.3	28.0	23.0	18.0	13.0	-	-
	67	48.5	5.6	43.4	36.5	31.4	26.3	21.3	-	44.6	6.3	42.7	34.8	29.8	24.8	19.8	-
	62	45.5	5.5	45.5	45.5	37.2	32.1	27.1	22.0	42.2	6.1	42.2	42.2	34.6	29.6	24.6	19.6
1500	77	57.3	5.6	23.1	17.3	11.5	-	-	-	51.8	6.3	18.3	12.6	6.9	-	-	-
	72	53.4	5.6	34.6	28.8	23.0	17.2	-	-	48.5	6.3	31.2	25.5	19.8	14.0	-	-
	67	49.5	5.6	46.1	40.3	34.5	28.7	22.9	-	45.2	6.3	44.1	38.4	32.6	26.9	21.2	-
	62	46.4	5.5	46.4	46.4	40.9	35.0	29.2	23.4	42.9	6.2	42.9	42.9	37.9	32.1	26.4	20.7
	57	47.1	5.5	47.1	47.0	41.2	35.4	29.6	23.8	44.0	6.2	44.0	44.0	38.3	32.6	26.9	21.1
1750	77	58.4	5.6	27.6	19.1	12.6	-	-	-	52.6	6.3	23.5	13.9	7.4	-	-	-
	72	54.4	5.6	38.2	31.6	25.1	18.5	-	-	49.2	6.3	34.4	27.9	21.5	15.0	-	-
	67	50.5	5.6	48.8	44.1	37.6	31.0	24.5	-	45.9	6.3	45.5	41.9	35.5	29.0	22.5	-
	62	47.3	5.5	47.3	47.3	44.5	38.0	31.4	24.9	43.5	6.2	43.5	43.5	41.2	34.7	28.2	21.8
	57	48.1	5.5	48.1	48.0	44.9	38.4	31.8	25.3	44.7	6.2	44.7	44.7	41.7	35.2	28.7	22.3
2000	77	59.6	5.7	32.0	20.9	13.6	-	-	-	53.3	6.3	28.6	15.2	8.0	-	-	-
	72	55.5	5.7	41.7	34.4	27.1	19.8	-	-	50.0	6.3	37.6	30.4	23.2	16.0	-	-
	67	51.4	5.7	51.4	48.0	40.7	33.4	26.1	-	46.6	6.3	46.6	45.5	38.3	31.1	23.9	-
	62	48.2	5.5	48.2	48.2	48.2	40.9	33.6	26.3	44.2	6.2	44.2	44.2	44.2	37.3	30.1	22.8
	57	49.0	5.6	49.0	49.0	48.6	41.3	34.0	26.7	45.4	6.3	45.4	45.4	45.0	37.8	30.6	23.4
2250	72	56.3	5.6	45.2	37.2	29.2	21.3	-	-	53.4	6.0	41.8	33.9	26.0	18.1	-	-
	67	52.2	5.6	52.2	50.5	43.8	35.8	27.9	-	49.8	6.0	49.8	49.2	42.6	34.7	26.8	-
	62	48.9	5.5	48.9	48.9	48.9	40.9	33.0	25.0	47.1	5.9	47.1	47.1	47.1	39.3	31.4	23.5
	57	49.7	5.6	49.7	49.7	49.5	41.6	33.6	25.6	48.3	5.9	48.3	48.3	48.1	40.2	32.3	24.4
2500	72	57.1	5.6	48.6	39.9	31.3	22.7	-	-	56.9	5.6	46.1	37.5	28.8	20.2	-	-
	67	53.0	5.6	53.0	53.0	46.9	38.3	29.6	-	53.0	5.6	53.0	53.0	46.9	38.3	29.6	-
	62	49.6	5.5	49.6	49.6	49.6	41.0	32.3	23.7	50.1	5.5	50.1	50.1	50.1	41.4	32.8	24.1
	57	50.4	5.5	50.4	50.4	50.4	41.8	33.2	24.5	51.3	5.5	51.3	51.3	51.3	42.6	34.0	25.4

1. These capacities are gross ratings. For net capacity, deduct air blower motor, MBh = 3.415 x kW. Refer to the appropriate Blower Performance Table for the kW of the supply air blower motor.
2. These ratings include the condenser fan motors (total 1 kW) and the compressor motors but not the supply air blower motor.

ZE072 (6.0 Ton)

Air on Evaporator Coil		Temperature of Air on Condenser Coil															
		Total Capacity[1] (MBh)	Total Input (kW)[2]	Sensible Capacity (MBh) Return Dry Bulb (°F)						Total Capacity[1] (MBh)	Total Input (kW)[2]	Sensible Capacity (MBh) Return Dry Bulb (°F)					
CFM	WB (°F)			90	85	80	75	70	65			90	85	80	75	70	65
		75°F								85°F							
1500	77	89.8	4.2	38.1	32.3	26.5	-	-	-	85.2	4.8	37.2	31.6	25.9	-	-	-
	72	81.7	4.2	49.1	41.5	33.8	26.2	-	-	77.4	4.7	48.1	40.6	33.0	25.4	-	-
	67	73.7	4.1	60.1	50.6	41.2	33.5	26.3	-	69.7	4.7	59.0	49.5	40.1	32.6	25.3	-
	62	70.3	4.1	64.8	56.4	48.6	39.7	33.9	26.5	68.8	4.6	62.1	54.5	47.1	39.2	32.8	25.6
1800	77	91.8	4.2	46.1	36.5	27.0	-	-	-	86.3	4.7	44.9	35.5	26.0	-	-	-
	72	84.1	4.2	54.5	45.4	36.209	27.0	-	-	79.2	4.7	53.2	44.1	35.0	25.9	-	-
	67	76.3	4.1	63.0	54.2	45.4	36.1	27.1	-	72.2	4.7	61.4	52.7	43.9	34.8	25.9	-
	62	71.5	4.1	67.8	61.2	54.6	44.3	36.4	27.3	69.5	4.6	65.1	59.0	52.9	43.3	34.9	26.0
	57	60.7	4.0	60.7	60.7	60.7	54.7	45.7	36.6	59.4	4.5	59.4	59.4	59.4	53.0	44.0	35.1
2100	77	93.8	4.2	54.1	40.8	27.6	-	-	-	87.4	4.7	52.7	39.4	26.1	-	-	-
	72	86.4	4.1	60.0	49.3	38.6	27.8	-	-	81.1	4.7	58.2	47.6	37.0	26.3	-	-
	67	78.9	4.1	66.0	57.8	49.6	38.7	28.0	-	74.7	4.6	63.8	55.8	47.8	37.1	26.4	-
	62	72.7	4.1	70.8	66.0	60.6	48.8	38.9	28.1	70.3	4.6	68.1	63.6	58.7	47.4	37.1	26.4
	57	61.9	4.0	61.9	61.9	61.9	59.0	49.9	39.0	60.3	4.6	60.3	60.3	60.3	57.8	47.8	37.0
2400	77	95.9	4.2	62.1	45.1	28.1	-	-	-	88.5	4.7	60.4	43.3	26.2	-	-	-
	72	88.7	4.1	65.5	53.2	40.9	28.6	-	-	82.9	4.7	63.3	51.1	39.0	26.8	-	-
	67	81.5	4.1	68.9	61.3	53.8	41.3	28.9	-	77.3	4.6	66.2	58.9	51.7	39.3	27.0	-
	62	73.8	4.1	73.8	70.9	66.6	53.4	41.5	28.9	71.1	4.6	71.1	68.1	64.4	51.6	39.3	26.8
	57	63.2	4.0	63.2	63.2	63.2	63.2	54.0	41.3	61.3	4.6	61.3	61.3	61.3	61.3	51.7	38.9
2700	72	91.0	4.1	71.0	57.1	43.3	29.4	-	-	84.7	4.7	68.3	54.6	40.9	27.3	-	-
	67	84.0	4.1	71.9	64.9	57.9	43.8	29.8	-	79.8	4.6	68.6	62.1	55.6	41.5	27.5	-
	62	75.0	4.1	75.0	75.0	72.6	58.0	44.0	29.7	71.9	4.6	71.9	71.9	70.2	55.7	41.5	27.2
	57	64.4	4.0	64.4	64.4	64.4	64.4	58.2	43.7	62.2	4.6	62.2	62.2	62.2	62.2	55.5	40.8
3000	72	93.3	4.1	76.5	61.1	45.65	30.2	-	-	86.5	4.6	73.4	58.1	42.9	27.7	-	-
	67	86.6	4.1	74.8	68.5	62.1	46.4	30.7	-	82.3	4.6	71.0	65.2	59.4	43.8	28.1	-
	62	76.2	4.1	76.2	76.2	76.2	62.6	46.5	30.5	72.7	4.6	72.7	72.7	72.7	59.8	43.7	27.5
	57	65.7	4.0	65.7	65.7	65.7	65.7	62.4	46.1	63.1	4.6	63.1	63.1	63.1	63.1	59.3	42.7
		95°F								105°F							
1500	77	80.6	5.3	36.4	30.9	25.3	-	-	-	78.9	6.1	35.3	29.3	23.3	-	-	-
	72	73.1	5.2	47.2	39.7	32.1	24.6	-	-	69.3	6.0	45.3	37.7	30.1	22.5	-	-
	67	65.6	5.2	58.0	48.4	38.9	31.6	24.3	-	59.7	6.0	55.4	46.2	36.9	29.5	22.2	-
	62	67.2	5.1	59.5	52.6	45.7	38.7	31.6	24.6	63.2	5.9	56.2	50.0	43.8	36.6	29.5	22.3
1800	77	80.8	5.3	43.8	34.4	25.0	-	-	-	77.5	6.1	42.2	32.4	22.6	-	-	-
	72	74.4	5.2	51.8	42.8	33.734	24.7	-	-	69.9	6.0	49.6	40.5	31.4	22.3	-	-
	67	68.1	5.2	59.8	51.1	42.5	33.5	24.6	-	62.4	6.0	57.0	48.6	40.2	31.2	22.2	-
	62	67.6	5.1	62.5	56.8	51.2	42.3	33.5	24.6	63.6	5.9	58.9	53.9	49.0	40.1	31.1	22.1
	57	58.2	5.1	58.2	58.2	58.2	51.2	42.4	33.6	58.8	5.8	58.8	58.8	57.8	48.9	40.0	31.1
2100	77	81.0	5.2	51.2	37.9	24.7	-	-	-	76.1	6.1	49.1	35.5	21.9	-	-	-
	72	75.8	5.2	56.4	45.9	35.4	24.8	-	-	70.5	6.0	53.8	43.2	32.7	22.1	-	-
	67	70.6	5.2	61.6	53.8	46.0	35.4	24.8	-	65.0	5.9	58.5	51.0	43.5	32.8	22.1	-
	62	68.0	5.1	65.5	61.1	56.7	46.0	35.3	24.6	63.9	5.9	61.5	57.9	54.3	43.5	32.7	21.9
	57	58.7	5.1	58.7	58.7	58.7	56.6	45.8	35.0	58.4	5.9	58.4	58.4	58.4	54.2	43.3	32.3
2400	77	81.2	5.2	58.6	41.5	24.3	-	-	-	74.7	6.0	56.0	38.6	21.2	-	-	-
	72	77.1	5.2	61.0	49.0	37.0	24.9	-	-	71.2	6.0	58.0	46.0	34.0	22.0	-	-
	67	73.0	5.2	63.4	56.5	49.6	37.3	25.0	-	67.6	5.9	60.1	53.4	46.8	34.5	22.1	-
	62	68.4	5.1	68.4	65.4	62.3	49.7	37.2	24.6	64.3	5.9	64.1	61.8	59.6	46.9	34.3	21.7
	57	59.3	5.1	59.3	59.3	59.3	59.3	49.3	36.5	58.0	5.9	58.0	58.0	58.0	58.0	46.5	33.6
2700	72	78.5	5.2	65.6	52.1	38.6	25.1	-	-	71.8	6.0	62.2	48.7	35.3	21.8	-	-
	67	75.5	5.2	65.3	59.2	53.2	39.2	25.3	-	70.2	5.9	61.6	55.8	50.0	36.1	22.1	-
	62	68.8	5.1	68.8	68.8	67.8	53.4	39.0	24.6	64.7	5.9	64.7	64.7	64.7	50.4	36.0	21.5
	57	59.9	5.1	59.9	59.9	59.9	59.9	52.7	37.9	57.6	5.9	57.6	57.6	57.6	57.6	49.8	34.9
3000	72	79.8	5.2	70.2	55.2	40.208	25.2	-	-	72.4	5.9	66.4	51.5	36.6	21.6	-	-
	67	78.0	5.1	67.1	61.9	56.8	41.1	25.5	-	72.9	5.9	63.1	58.2	53.3	37.7	22.1	-
	62	69.3	5.1	69.3	69.3	69.3	57.1	40.8	24.6	65.0	5.9	65.0	65.0	65.0	53.8	37.6	21.3
	57	60.5	5.2	60.5	60.5	60.5	60.5	56.2	39.3	57.2	5.9	57.2	57.2	57.2	57.2	53.0	36.1

ZE072 (6.0 Ton) (Continued)

Air on Evaporator Coil		Temperature of Air on Condenser Coil															
		Total Capacity[1] (MBh)	Total Input (kW)[2]	Sensible Capacity (MBh) Return Dry Bulb (°F)						Total Capacity[1] (MBh)	Total Input (kW)[2]	Sensible Capacity (MBh) Return Dry Bulb (°F)					
CFM	WB (°F)			90	85	80	75	70	65			90	85	80	75	70	65
		115°F								125°F							
1500	77	77.3	7.0	34.1	27.7	21.2	-	-	-	75.6	7.9	32.9	26.0	19.2	-	-	-
	72	65.5	6.9	43.5	35.8	28.1	20.4	-	-	61.8	7.7	41.6	33.9	26.1	18.3	-	-
	67	53.8	6.7	52.9	43.9	35.0	27.5	20.0	-	47.9	7.5	47.9	41.7	33.0	25.4	17.8	-
	62	59.2	6.7	53.0	47.4	41.8	34.6	27.3	20.0	55.2	7.5	49.7	44.8	39.9	32.5	25.1	17.6
1800	77	74.2	6.9	40.5	30.3	20.2	-	-	-	71.0	7.8	38.8	28.3	17.8	-	-	-
	72	65.4	6.8	47.3	38.2	29.1	19.9	-	-	60.9	7.6	45.1	35.9	26.7	17.6	-	-
	67	56.6	6.7	54.1	46.0	38.0	28.8	19.7	-	50.9	7.5	50.9	43.5	35.7	26.5	17.3	-
	62	59.5	6.7	55.2	51.0	46.8	37.8	28.7	19.6	55.5	7.5	51.6	48.1	44.7	35.5	26.3	17.1
	57	59.4	6.6	56.3	56.0	55.7	46.7	37.6	28.5	60.1	7.4	51.9	51.9	51.9	44.4	35.2	26.0
2100	77	71.2	6.9	46.9	33.0	19.1	-	-	-	66.3	7.7	44.7	30.5	16.3	-	-	-
	72	65.3	6.8	51.2	40.6	30.0	19.5	-	-	60.1	7.6	48.5	37.9	27.4	16.8	-	-
	67	59.4	6.7	55.4	48.2	40.9	30.2	19.5	-	53.8	7.5	52.3	45.3	38.4	27.6	16.8	-
	62	59.8	6.7	57.5	54.7	51.8	41.0	30.1	19.2	55.7	7.5	53.5	51.5	49.4	38.4	27.5	16.5
	57	58.0	6.7	58.0	58.0	58.0	51.7	40.7	29.7	57.7	7.5	54.8	54.8	54.8	49.3	38.1	27.0
2400	77	68.2	6.8	53.3	35.7	18.1	-	-	-	61.7	7.6	50.7	32.8	14.9	-	-	-
	72	65.2	6.8	55.0	43.0	31.0	19.0	-	-	59.2	7.6	52.0	40.0	28.0	16.0	-	-
	67	62.2	6.7	56.7	50.3	43.9	31.6	19.2	-	56.7	7.5	53.3	47.2	41.1	28.7	16.4	-
	62	60.2	6.7	59.8	58.3	56.8	44.2	31.5	18.8	56.0	7.5	55.4	54.8	54.1	41.4	28.7	15.9
	57	56.7	6.7	56.7	56.7	56.7	56.7	43.8	30.8	55.3	7.5	55.3	55.3	55.3	54.1	41.0	27.9
2700	72	65.1	6.7	58.8	45.4	32.0	18.5	-	-	58.4	7.5	55.4	42.0	28.6	15.2	-	-
	67	65.0	6.7	57.9	52.4	46.9	32.9	19.0	-	59.7	7.5	54.3	49.0	43.8	29.8	15.9	-
	62	60.5	6.7	60.5	60.5	60.5	47.4	32.9	18.5	56.3	7.5	56.3	56.3	56.3	44.4	29.9	15.4
	57	55.3	6.7	55.3	55.3	55.3	55.3	46.8	31.9	53.0	7.5	53.0	53.0	53.0	53.0	43.9	28.8
3000	72	64.9	6.7	62.7	47.8	32.9	18.0	-	-	57.5	7.5	57.5	44.1	29.3	14.5	-	-
	67	67.7	6.7	59.2	54.5	49.9	34.3	18.8	-	62.6	7.5	55.2	50.8	46.4	30.9	15.4	-
	62	60.8	6.7	60.8	60.8	60.8	50.6	34.3	18.1	56.6	7.5	56.6	56.6	56.6	47.3	31.1	14.8
	57	53.9	6.7	53.9	53.9	53.9	53.9	49.9	33.0	50.6	7.5	50.6	50.6	50.6	50.6	46.8	29.8

1. These capacities are gross ratings. For net capacity, deduct air blower motor, MBh = 3.415 x kW. Refer to the appropriate Blower Performance Table for the kW of the supply air blower motor.
2. These ratings include the condenser fan motors (total 1 kW) and the compressor motors but not the supply air blower motor.

XN036-060 Cooling Capacities

XN036 (3.0 Ton)

Air on Evaporator Coil		Temperature of Air on Condenser Coil															
		Total Capacity[1] (MBh)	Total Input (kW)[2]	Sensible Capacity (MBh) Return Dry Bulb (°F)						Total Capacity[1] (MBh)	Total Input (kW)[2]	Sensible Capacity (MBh) Return Dry Bulb (°F)					
CFM	WB (°F)			90	85	80	75	70	65			90	85	80	75	70	65
		75°F								85°F							
750	77	50.3	2.0	22.1	18.7	15.4	-	-	-	48.2	2.3	20.9	17.6	14.2	-	-	-
	72	46.0	2.0	26.9	23.6	20.2	16.9	-	-	43.8	2.4	25.7	22.3	19.0	15.6	-	-
	67	41.8	2.1	31.7	28.4	25.0	21.7	18.4	-	39.4	2.4	30.4	27.0	23.7	20.3	17.0	-
	62	37.5	2.0	37.5	35.1	30.6	27.2	23.9	20.6	35.7	2.3	35.7	33.7	28.8	25.5	22.1	18.8
900	77	51.9	2.0	24.5	20.6	16.7	-	-	-	49.4	2.4	23.3	19.4	15.5	-	-	-
	72	47.5	2.0	29.8	25.8	21.9	18.0	-	-	44.9	2.4	28.4	24.5	20.6	16.7	-	-
	67	43.1	2.1	35.0	31.1	27.1	23.2	19.3	-	40.4	2.4	33.6	29.7	25.8	21.8	17.9	-
	62	38.7	2.0	38.7	37.1	33.1	29.2	25.3	21.4	36.6	2.4	36.6	35.3	31.4	27.4	23.5	19.6
	57	38.5	2.0	38.5	38.5	35.1	31.2	27.3	23.3	36.7	2.4	36.7	36.6	32.7	28.8	24.9	21.0
1050	77	53.4	2.0	27.0	22.5	18.0	-	-	-	50.6	2.4	25.7	21.2	16.7	-	-	-
	72	48.9	2.1	32.6	28.1	23.6	19.1	-	-	46.0	2.4	31.2	26.7	22.3	17.8	-	-
	67	44.3	2.1	38.2	33.7	29.2	24.7	20.2	-	41.4	2.4	36.8	32.3	27.8	23.3	18.9	-
	62	39.8	2.1	39.8	39.0	35.7	31.2	26.7	22.2	37.5	2.4	37.5	36.8	33.9	29.4	24.9	20.4
	57	39.7	2.0	39.7	39.7	37.8	33.3	28.8	24.3	37.6	2.4	37.6	37.5	35.3	30.9	26.4	21.9
1200	77	55.0	2.1	29.5	24.4	19.3	-	-	-	51.8	2.4	28.0	23.0	17.9	-	-	-
	72	50.3	2.1	35.5	30.4	25.3	20.2	-	-	47.1	2.4	34.0	29.0	23.9	18.9	-	-
	67	45.6	2.1	41.5	36.4	31.3	26.2	21.1	-	42.3	2.5	40.0	34.9	29.9	24.8	19.8	-
	62	41.0	2.1	41.0	41.0	38.3	33.2	28.1	23.0	38.4	2.4	38.4	38.4	36.4	31.3	26.3	21.3
	57	40.9	2.1	40.9	40.9	40.5	35.4	30.4	25.3	38.5	2.4	38.5	38.5	38.0	32.9	27.9	22.8
1350	72	51.4	2.2	38.8	33.3	27.9	22.4	-	-	48.2	2.5	37.0	31.5	26.0	20.5	-	-
	67	46.6	2.2	44.6	39.9	34.5	29.0	23.6	-	43.3	2.5	42.1	38.0	32.5	26.9	21.4	-
	62	41.9	2.2	41.9	41.9	40.5	35.1	29.6	24.2	39.3	2.5	39.3	39.3	38.3	32.8	27.2	21.7
	57	41.7	2.2	41.7	41.7	41.6	36.1	30.7	25.2	39.4	2.5	39.4	39.4	39.1	33.6	28.0	22.5
1500	72	52.5	2.3	42.0	36.2	30.4	24.6	-	-	49.3	2.5	40.1	34.1	28.0	22.0	-	-
	67	47.6	2.4	47.6	43.5	37.7	31.8	26.0	-	44.3	2.5	44.3	41.1	35.0	29.0	23.0	-
	62	42.7	2.3	42.7	42.7	42.7	36.9	31.1	25.3	40.2	2.5	40.2	40.2	40.2	34.2	28.2	22.2
	57	42.6	2.3	42.6	42.6	42.6	36.8	31.0	25.2	40.2	2.5	40.2	40.2	40.2	34.2	28.2	22.2
		95°F								105°F							
750	77	46.1	2.7	19.8	16.4	13.1	-	-	-	41.7	3.2	17.1	14.6	11.3	-	-	-
	72	41.6	2.7	24.4	21.1	17.7	14.3	-	-	37.7	3.1	22.5	19.3	16.0	12.7	-	-
	67	37.0	2.7	29.1	25.7	22.4	19.0	15.6	-	33.7	3.1	27.9	23.9	20.7	17.4	14.1	-
	62	34.0	2.7	34.0	32.3	27.1	23.7	20.4	17.0	31.1	3.1	31.1	29.9	24.6	21.3	18.1	14.8
900	77	47.0	2.7	22.0	18.1	14.2	-	-	-	42.7	3.2	20.2	16.3	12.5	-	-	-
	72	42.3	2.7	27.1	23.2	19.3	15.4	-	-	38.6	3.2	25.4	21.5	17.6	13.8	-	-
	67	37.7	2.7	32.2	28.3	24.4	20.5	16.6	-	34.4	3.2	30.5	26.6	22.8	18.9	15.1	-
	62	34.6	2.7	34.6	33.5	29.6	25.7	21.8	17.8	31.8	3.1	31.8	31.0	27.1	23.3	19.4	15.5
	57	34.8	2.7	34.8	34.2	30.3	26.4	22.5	18.6	31.9	3.1	31.9	31.3	27.5	23.6	19.8	15.9
1050	77	47.8	2.7	24.3	19.9	15.4	-	-	-	43.6	3.2	23.3	18.1	13.6	-	-	-
	72	43.1	2.8	29.8	25.4	20.9	16.5	-	-	39.4	3.2	28.2	23.7	19.3	14.8	-	-
	67	38.4	2.8	35.3	30.9	26.4	22.0	17.5	-	35.2	3.2	33.1	29.4	24.9	20.5	16.0	-
	62	35.2	2.7	35.2	34.7	32.0	27.6	23.1	18.7	32.5	3.1	32.5	32.1	29.7	25.2	20.7	16.3
	57	35.5	2.7	35.5	35.1	32.9	28.4	24.0	19.5	32.6	3.1	32.6	32.3	30.0	25.6	21.1	16.7
1200	77	48.6	2.8	26.6	21.6	16.6	-	-	-	44.6	3.2	26.4	19.8	14.8	-	-	-
	72	43.8	2.8	32.5	27.5	22.5	17.5	-	-	40.3	3.2	31.0	26.0	20.9	15.9	-	-
	67	39.0	2.8	38.4	33.4	28.5	23.5	18.5	-	36.0	3.2	35.7	32.1	27.0	22.0	16.9	-
	62	35.8	2.8	35.8	35.8	34.5	29.5	24.5	19.5	33.2	3.2	33.2	33.2	32.2	27.1	22.1	17.0
	57	36.1	2.8	36.1	36.1	35.4	30.4	25.4	20.4	33.3	3.2	33.3	33.3	32.6	27.6	22.5	17.5
1350	72	44.9	2.8	35.3	29.7	24.1	18.5	-	-	41.0	3.2	33.5	27.9	22.3	16.7	-	-
	67	40.0	2.8	39.7	36.0	30.4	24.8	19.2	-	36.6	3.2	36.5	34.1	28.8	23.2	17.6	-
	62	36.8	2.7	36.8	36.8	36.1	30.5	24.9	19.3	33.8	3.1	33.8	33.8	33.3	27.7	22.0	16.4
	57	37.0	2.7	37.0	37.0	36.6	31.0	25.4	19.8	33.9	3.1	33.9	33.9	33.6	27.9	22.3	16.7
1500	72	46.1	2.7	38.1	31.9	25.7	19.5	-	-	41.7	3.2	36.1	29.9	23.7	17.5	-	-
	67	41.0	2.7	41.0	38.7	32.4	26.2	20.0	-	37.3	3.1	37.3	36.1	30.6	24.4	18.2	-
	62	37.7	2.7	37.7	37.7	37.7	31.4	25.2	19.0	34.4	3.1	34.4	34.4	34.4	28.2	22.0	15.8
	57	37.9	2.7	37.9	37.9	37.9	31.7	25.4	19.2	34.5	3.1	34.5	34.5	34.5	28.3	22.1	16.0

XN036 (3.0 Ton) (Continued)

Air on Evaporator Coil		Temperature of Air on Condenser Coil															
		Total Capacity[1] (MBh)	Total Input (kW)[2]	Sensible Capacity (MBh) Return Dry Bulb (°F)						Total Capacity[1] (MBh)	Total Input (kW)[2]	Sensible Capacity (MBh) Return Dry Bulb (°F)					
CFM	WB (°F)			90	85	80	75	70	65			90	85	80	75	70	65
		115°F								125°F							
750	77	37.3	3.6	14.4	12.8	9.6	-	-	-	32.9	4.1	11.6	10.9	7.9	-	-	-
	72	33.8	3.6	20.6	17.4	14.3	11.1	-	-	30.0	4.0	18.7	15.6	12.6	9.5	-	-
	67	30.3	3.6	26.8	22.1	19.0	15.8	12.6	-	27.0	4.0	25.6	20.3	17.3	14.2	11.1	-
	62	28.2	3.5	28.2	27.5	22.1	18.9	15.8	12.6	25.2	4.0	25.2	25.1	19.6	16.5	13.5	10.4
900	77	38.4	3.6	18.3	14.5	10.7	-	-	-	34.1	4.1	16.5	12.7	9.0	-	-	-
	72	34.8	3.6	23.6	19.8	16.0	12.1	-	-	31.0	4.0	21.8	18.0	14.3	10.5	-	-
	67	31.2	3.6	28.8	25.0	21.2	17.4	13.6	-	28.0	4.0	27.1	23.4	19.6	15.8	12.0	-
	62	29.0	3.6	29.0	28.5	24.7	20.9	17.1	13.2	26.1	4.0	26.1	26.0	22.3	18.5	14.7	10.9
	57	29.0	3.6	29.0	28.5	24.6	20.8	17.0	13.2	26.1	4.0	26.1	25.6	21.8	18.0	14.3	10.5
1050	77	39.4	3.6	22.3	16.3	11.8	-	-	-	35.3	4.1	21.4	14.5	10.1	-	-	-
	72	35.8	3.6	26.6	22.1	17.6	13.2	-	-	32.1	4.0	24.9	20.5	16.0	11.5	-	-
	67	32.1	3.6	30.9	27.9	23.4	19.0	14.5	-	28.9	4.0	28.6	26.4	21.9	17.4	13.0	-
	62	29.8	3.6	29.8	29.5	27.3	22.8	18.4	13.9	27.0	4.0	27.0	27.0	24.9	20.4	16.0	11.5
	57	29.8	3.6	29.8	29.5	27.2	22.8	18.3	13.8	27.0	4.0	27.0	26.7	24.4	19.9	15.5	11.0
1200	77	40.5	3.6	26.2	18.1	13.0	-	-	-	36.4	4.1	26.2	16.3	11.2	-	-	-
	72	36.7	3.6	29.5	24.4	19.3	14.2	-	-	33.1	4.0	28.0	22.9	17.7	12.5	-	-
	67	32.9	3.6	32.9	30.8	25.6	20.5	15.4	-	29.9	4.0	29.9	29.4	24.2	19.1	13.9	-
	62	30.6	3.6	30.6	30.6	29.9	24.8	19.7	14.5	27.9	4.0	27.9	27.9	27.6	22.4	17.2	12.1
	57	30.6	3.6	30.6	30.6	29.8	24.7	19.6	14.5	27.9	4.0	27.9	27.9	27.0	21.9	16.7	11.5
1350	72	37.0	3.6	31.8	26.1	20.5	14.9	-	-	33.1	4.0	30.0	24.3	18.7	13.1	-	-
	67	33.2	3.6	33.2	32.1	27.2	21.6	16.0	-	29.8	4.0	29.8	29.8	25.6	20.0	14.3	-
	62	30.8	3.6	30.8	30.8	30.5	24.9	19.2	13.6	27.9	4.0	27.9	27.9	27.7	22.1	16.4	10.8
	57	30.9	3.6	30.9	30.9	30.5	24.8	19.2	13.6	27.8	4.0	27.8	27.8	27.4	21.8	16.1	10.5
1500	72	37.4	3.6	34.0	27.8	21.7	15.5	-	-	33.0	4.0	31.9	25.8	19.7	13.6	-	-
	67	33.5	3.6	33.5	33.5	28.8	22.7	16.5	-	29.7	4.0	29.7	29.7	27.0	20.9	14.8	-
	62	31.1	3.5	31.1	31.1	31.1	24.9	18.8	12.7	27.8	4.0	27.8	27.8	27.8	21.7	15.6	9.5
	57	31.1	3.6	31.1	31.1	31.1	25.0	18.8	12.7	27.7	4.0	27.7	27.7	27.7	21.6	15.5	9.4

1. These capacities are gross ratings. For net capacity, deduct air blower motor, MBh = 3.415 x kW. Refer to the appropriate Blower Performance Table for the kW of the supply air blower motor.
2. These ratings include the condenser fan motors (total 1 kW) and the compressor motors but not the supply air blower motor.

XN048 (4.0 Ton)

Air on Evaporator Coil		Temperature of Air on Condenser Coil															
		Total Capacity[1] (MBh)	Total Input (kW)[2]	Sensible Capacity (MBh) Return Dry Bulb (°F)						Total Capacity[1] (MBh)	Total Input (kW)[2]	Sensible Capacity (MBh) Return Dry Bulb (°F)					
CFM	WB (°F)			90	85	80	75	70	65			90	85	80	75	70	65
		75°F								85°F							
1000	77	60.7	2.7	28.7	24.3	19.9	-	-	-	56.8	3.1	26.8	22.4	18.0	-	-	-
	72	56.1	2.6	34.6	30.2	25.8	21.4	-	-	52.5	3.1	32.9	28.6	24.2	19.8	-	-
	67	51.5	2.6	40.5	36.1	31.7	27.3	22.9	-	48.2	3.0	39.1	34.7	30.3	26.0	21.6	-
	62	47.2	2.6	47.2	46.3	38.8	34.4	30.0	25.6	44.2	3.0	44.2	43.7	37.2	32.9	28.5	24.1
1200	77	62.6	2.7	31.7	26.6	21.5	-	-	-	58.5	3.1	29.6	24.5	19.5	-	-	-
	72	57.9	2.7	38.1	33.0	27.9	22.8	-	-	54.0	3.1	36.2	31.1	26.1	21.0	-	-
	67	53.1	2.6	44.5	39.4	34.3	29.2	24.1	-	49.6	3.0	42.8	37.8	32.7	27.7	22.6	-
	62	48.7	2.6	48.7	48.1	41.9	36.8	31.7	26.6	45.5	3.0	45.5	45.2	40.2	35.1	30.1	25.0
	57	48.0	2.0	48.0	48.0	43.9	38.8	33.7	28.7	45.3	2.7	45.3	45.3	41.5	36.4	31.4	26.3
1400	77	64.5	2.7	34.7	28.9	23.2	-	-	-	60.2	3.1	32.3	26.6	20.9	-	-	-
	72	59.6	2.7	41.5	35.8	30.0	24.2	-	-	55.6	3.1	39.4	33.7	28.0	22.3	-	-
	67	54.7	2.6	48.4	42.6	36.9	31.1	25.3	-	51.0	3.1	46.6	40.8	35.1	29.4	23.7	-
	62	50.2	2.6	50.2	49.9	45.0	39.3	33.5	27.7	46.8	3.0	46.8	46.7	43.1	37.4	31.6	25.9
	57	49.5	2.0	49.5	49.5	47.2	41.4	35.7	29.9	46.6	2.7	46.6	46.6	44.5	38.8	33.1	27.4
1600	77	66.4	2.7	37.7	31.2	24.8	-	-	-	61.9	3.1	35.1	28.7	22.3	-	-	-
	72	61.4	2.7	45.0	38.5	32.1	25.6	-	-	57.2	3.1	42.7	36.3	29.9	23.5	-	-
	67	56.4	2.6	52.3	45.9	39.4	33.0	26.5	-	52.5	3.1	50.3	43.9	37.5	31.1	24.7	-
	62	51.6	2.6	51.6	51.6	48.1	41.7	35.2	28.8	48.1	3.0	48.1	48.1	46.0	39.6	33.2	26.8
	57	50.9	2.0	50.9	50.9	50.5	44.0	37.6	31.1	47.9	2.7	47.9	47.9	47.5	41.1	34.8	28.4
1800	72	62.4	2.7	48.3	41.3	34.2	27.1	-	-	58.0	3.1	46.0	38.9	31.9	24.9	-	-
	67	57.3	2.6	55.3	49.1	42.0	35.0	27.9	-	53.2	3.1	52.1	47.1	40.1	33.0	26.0	-
	62	52.5	2.6	52.5	52.5	50.8	43.7	36.6	29.6	48.8	3.0	48.8	48.8	47.8	40.8	33.7	26.7
	57	51.8	2.0	51.8	51.8	51.5	44.5	37.4	30.4	48.6	2.7	48.6	48.6	48.4	41.4	34.4	27.4
2000	72	63.4	2.7	51.7	44.0	36.3	28.7	-	-	58.8	3.1	49.3	41.6	34.0	26.3	-	-
	67	58.2	2.7	58.2	52.3	44.6	36.9	29.3	-	54.0	3.1	54.0	50.3	42.6	35.0	27.3	-
	62	53.4	2.6	53.4	53.4	53.4	45.7	38.0	30.4	49.5	3.0	49.5	49.5	49.5	41.9	34.3	26.6
	57	52.6	2.1	52.6	52.6	52.6	45.0	37.3	29.6	49.3	2.8	49.3	49.3	49.3	41.7	34.0	26.4
		95°F								105°F							
1000	77	52.9	3.5	24.9	20.5	16.1	-	-	-	49.1	4.1	22.1	18.8	14.5	-	-	-
	72	48.9	3.5	31.3	26.9	22.5	18.2	-	-	45.2	4.0	29.5	25.2	20.8	16.5	-	-
	67	44.8	3.5	37.7	33.3	29.0	24.6	20.2	-	41.3	4.0	36.9	31.5	27.2	22.9	18.5	-
	62	41.2	3.4	41.2	41.2	35.7	31.3	27.0	22.6	38.2	4.0	38.2	38.2	32.7	28.3	24.0	19.7
1200	77	54.4	3.5	27.4	22.4	17.4	-	-	-	50.2	4.1	25.6	20.6	15.6	-	-	-
	72	50.2	3.5	34.3	29.3	24.3	19.2	-	-	46.2	4.1	32.4	27.5	22.5	17.5	-	-
	67	46.0	3.5	41.2	36.2	31.2	26.2	21.1	-	42.3	4.1	39.3	34.3	29.3	24.4	19.4	-
	62	42.3	3.5	42.3	42.3	38.4	33.4	28.4	23.4	39.0	4.0	39.0	39.0	35.2	30.3	25.3	20.3
	57	42.6	3.4	42.6	42.6	39.1	34.1	29.0	24.0	39.6	4.0	39.6	39.6	35.9	30.9	26.0	21.0
1400	77	55.9	3.5	29.9	24.3	18.6	-	-	-	51.4	4.1	29.1	22.4	16.8	-	-	-
	72	51.6	3.5	37.3	31.7	26.0	20.3	-	-	47.3	4.1	35.4	29.7	24.1	18.5	-	-
	67	47.3	3.5	44.7	39.1	33.4	27.7	22.0	-	43.2	4.1	41.6	37.1	31.5	25.9	20.3	-
	62	43.5	3.5	43.5	43.5	41.1	35.5	29.8	24.1	39.9	4.0	39.9	39.9	37.8	32.2	26.6	21.0
	57	43.8	3.4	43.8	43.8	41.8	36.2	30.5	24.8	40.4	4.0	40.4	40.4	38.5	32.9	27.3	21.7
1600	77	57.4	3.5	32.5	26.1	19.8	-	-	-	52.5	4.1	32.6	24.2	17.9	-	-	-
	72	53.0	3.5	40.4	34.0	27.7	21.4	-	-	48.3	4.1	38.3	32.0	25.8	19.5	-	-
	67	48.6	3.5	48.3	41.9	35.6	29.3	22.9	-	44.2	4.1	44.0	39.9	33.6	27.4	21.1	-
	62	44.6	3.5	44.6	44.6	43.9	37.5	31.2	24.9	40.8	4.0	40.8	40.8	40.4	34.1	27.9	21.6
	57	44.9	3.5	44.9	44.9	44.6	38.3	32.0	25.6	41.3	4.0	41.3	41.3	41.2	34.9	28.7	22.4
1800	72	53.6	3.5	43.6	36.6	29.7	22.7	-	-	48.8	4.1	41.4	34.5	27.6	20.7	-	-
	67	49.2	3.5	49.0	45.1	38.1	31.1	24.1	-	44.6	4.1	44.5	42.1	36.1	29.2	22.3	-
	62	45.2	3.5	45.2	45.2	44.8	37.8	30.8	23.9	41.2	4.0	41.2	41.2	41.0	34.1	27.2	20.3
	57	45.5	3.5	45.5	45.5	45.3	38.3	31.4	24.4	41.8	4.0	41.8	41.8	41.7	34.8	27.9	21.0
2000	72	54.3	3.5	46.9	39.2	31.6	24.0	-	-	49.3	4.1	44.6	37.0	29.5	22.0	-	-
	67	49.8	3.5	49.8	48.2	40.6	33.0	25.3	-	45.1	4.1	45.1	44.3	38.5	31.0	23.4	-
	62	45.7	3.5	45.7	45.7	45.7	38.1	30.5	22.9	41.6	4.0	41.6	41.6	41.6	34.1	26.6	19.0
	57	46.0	3.4	46.0	46.0	46.0	38.4	30.8	23.2	42.2	4.0	42.2	42.2	42.2	34.7	27.1	19.6

XN048 (4.0 Ton) (Continued)

Air on Evaporator Coil		Temperature of Air on Condenser Coil															
		Total Capacity[1] (MBh)	Total Input (kW)[2]	Sensible Capacity (MBh) Return Dry Bulb (°F)						Total Capacity[1] (MBh)	Total Input (kW)[2]	Sensible Capacity (MBh) Return Dry Bulb (°F)					
CFM	WB (°F)			90	85	80	75	70	65			90	85	80	75	70	65
		115°F								125°F							
1000	77	45.3	4.6	19.3	17.1	12.8	-	-	-	41.5	5.2	17.6	15.2	11.2	-	-	-
	72	41.6	4.6	27.8	23.4	19.1	14.8	-	-	37.9	5.2	26.0	21.7	17.4	13.1	-	-
	67	37.8	4.6	36.2	29.7	25.4	21.1	16.8	-	34.4	5.2	34.4	27.9	23.7	19.4	15.1	-
	62	35.2	4.5	35.2	35.2	29.6	25.3	21.0	16.7	32.2	5.1	32.2	32.2	26.6	22.3	18.0	13.8
1200	77	46.0	4.6	23.8	18.8	13.9	-	-	-	41.9	5.2	22.7	17.0	12.2	-	-	-
	72	42.3	4.6	30.6	25.6	20.7	15.8	-	-	38.3	5.2	28.7	23.8	18.9	14.0	-	-
	67	38.5	4.6	37.4	32.4	27.5	22.6	17.6	-	34.7	5.2	34.7	30.6	25.7	20.8	15.9	-
	62	35.7	4.6	35.7	35.7	32.1	27.1	22.2	17.3	32.5	5.1	32.5	32.5	28.9	24.0	19.1	14.2
	57	36.5	4.6	36.5	36.5	32.8	27.8	22.9	18.0	33.5	5.1	33.5	33.5	29.6	24.7	19.8	14.9
1400	77	46.8	4.7	28.2	20.5	14.9	-	-	-	42.2	5.2	27.8	18.9	13.1	-	-	-
	72	43.0	4.7	33.4	27.8	22.3	16.7	-	-	38.6	5.2	31.4	25.9	20.4	14.9	-	-
	67	39.1	4.6	38.6	35.2	29.6	24.0	18.5	-	35.0	5.2	35.0	33.2	27.7	22.2	16.7	-
	62	36.3	4.6	36.3	36.3	34.5	28.9	23.4	17.8	32.8	5.2	32.8	32.8	31.2	25.7	20.2	14.7
	57	37.1	4.6	37.1	37.1	35.2	29.7	24.1	18.6	33.8	5.2	33.8	33.8	31.9	26.4	20.9	15.4
1600	77	47.6	4.7	32.6	22.2	16.0	-	-	-	42.6	5.3	32.9	20.7	14.1	-	-	-
	72	43.7	4.7	36.2	30.0	23.8	17.7	-	-	39.0	5.3	34.1	28.0	21.9	15.8	-	-
	67	39.7	4.7	39.7	37.9	31.7	25.5	19.3	-	35.3	5.3	35.3	35.3	29.7	23.6	17.5	-
	62	36.9	4.6	36.9	36.9	36.9	30.7	24.6	18.4	33.1	5.2	33.1	33.1	33.1	27.4	21.2	15.1
	57	37.7	4.6	37.7	37.7	37.7	31.5	25.4	19.2	34.1	5.2	34.1	34.1	34.1	28.2	22.1	16.0
1800	72	44.0	4.7	39.2	32.4	25.6	18.8	-	-	39.2	5.3	37.1	30.3	23.6	16.9	-	-
	67	40.1	4.7	40.1	39.1	34.0	27.2	20.4	-	35.5	5.3	35.5	35.5	32.0	25.3	18.6	-
	62	37.2	4.6	37.2	37.2	37.2	30.4	23.6	16.8	33.3	5.2	33.3	33.3	33.3	26.7	20.0	13.3
	57	38.0	4.6	38.0	38.0	38.0	31.2	24.4	17.6	34.3	5.2	34.3	34.3	34.3	27.6	20.9	14.2
2000	72	44.4	4.7	42.3	34.9	27.4	19.9	-	-	39.4	5.3	39.4	32.7	25.3	17.9	-	-
	67	40.4	4.7	40.4	40.4	36.4	29.0	21.5	-	35.8	5.3	35.8	35.8	34.3	27.0	19.6	-
	62	37.6	4.6	37.6	37.6	37.6	30.1	22.6	15.2	33.5	5.2	33.5	33.5	33.5	26.1	18.7	11.4
	57	38.4	4.6	38.4	38.4	38.4	30.9	23.4	16.0	34.5	5.2	34.5	34.5	34.5	27.1	19.8	12.4

1. These capacities are gross ratings. For net capacity, deduct air blower motor, MBh = 3.415 x kW. Refer to the appropriate Blower Performance Table for the kW of the supply air blower motor.
2. These ratings include the condenser fan motors (total 1 kW) and the compressor motors but not the supply air blower motor.

XN060 Low (5.0 Ton)

Air on Evaporator Coil		Temperature of Air on Condenser Coil															
		Total Capacity[1] (MBh)	Total Input (kW)[2]	Sensible Capacity (MBh) Return Dry Bulb (°F)						Total Capacity[1] (MBh)	Total Input (kW)[2]	Sensible Capacity (MBh) Return Dry Bulb (°F)					
CFM	WB (°F)			90	85	80	75	70	65			90	85	80	75	70	65
		75°F								**85°F**							
1250	77	55.5	2.3	18.8	20.3	14.1	-	-	-	51.0	2.7	20.9	19.1	13.6	-	-	-
	72	51.6	2.3	33.3	27.8	22.3	16.9	-	-	47.2	2.7	32.1	26.6	21.1	15.6	-	-
	67	47.8	2.3	47.8	35.3	30.6	25.2	19.7	-	43.4	2.7	43.4	34.1	28.6	23.0	17.5	-
	62	45.4	2.2	45.4	42.4	34.2	28.8	23.3	17.8	42.0	2.7	42.0	40.1	31.8	26.3	20.7	15.2
1500	77	57.2	2.3	26.4	22.1	15.8	-	-	-	52.7	2.7	28.1	21.7	15.3	-	-	-
	72	53.2	2.2	37.8	31.4	25.0	18.7	-	-	48.7	2.7	36.5	30.1	23.7	17.3	-	-
	67	49.2	2.2	49.2	40.7	34.3	28.0	21.6	-	44.8	2.6	44.8	38.5	32.1	25.7	19.3	-
	62	46.7	2.2	46.7	44.8	38.4	32.0	25.6	19.2	43.3	2.6	43.3	42.1	35.7	29.3	23.0	16.6
	57	46.5	2.2	46.5	44.6	38.2	31.9	25.5	19.1	43.3	2.7	43.3	41.9	35.5	29.1	22.8	16.4
1750	77	58.8	2.2	34.1	24.0	17.5	-	-	-	54.3	2.6	35.4	24.2	17.0	-	-	-
	72	54.7	2.2	42.3	35.0	27.7	20.5	-	-	50.2	2.6	40.8	33.5	26.3	19.1	-	-
	67	50.6	2.2	50.6	46.1	38.0	30.7	23.5	-	46.2	2.6	46.2	42.9	35.6	28.4	21.2	-
	62	48.1	2.2	48.1	47.1	42.5	35.2	28.0	20.7	44.7	2.6	44.7	44.1	39.6	32.4	25.2	17.9
	57	47.9	2.2	47.9	46.9	42.4	35.1	27.8	20.5	44.7	2.6	44.7	44.0	39.4	32.2	25.0	17.7
2000	77	60.5	2.2	41.7	25.8	19.1	-	-	-	55.9	2.6	42.7	26.8	18.7	-	-	-
	72	56.2	2.2	46.9	38.7	30.5	22.2	-	-	51.7	2.6	45.1	37.0	28.9	20.8	-	-
	67	52.0	2.2	52.0	51.5	41.8	33.5	25.3	-	47.5	2.6	47.5	47.3	39.2	31.1	23.0	-
	62	49.4	2.1	49.4	49.4	46.7	38.5	30.3	22.1	46.0	2.6	46.0	46.0	43.6	35.5	27.4	19.3
	57	49.2	2.2	49.2	49.2	46.5	38.3	30.1	21.9	46.0	2.6	46.0	46.0	43.4	35.3	27.2	19.1
2250	72	56.9	2.2	50.9	41.7	33.0	24.3	-	-	52.5	2.6	48.5	39.9	31.3	22.6	-	-
	67	52.6	2.2	52.6	52.3	45.2	36.5	27.9	-	48.2	2.6	48.2	48.1	42.4	33.7	25.1	-
	62	50.0	2.1	50.0	50.0	48.6	39.9	31.2	22.5	46.7	2.6	46.7	46.7	45.5	36.8	28.2	19.6
	57	49.7	2.2	49.7	49.7	48.4	39.7	31.0	22.3	46.7	2.6	46.7	46.7	45.4	36.7	28.1	19.5
2500	72	57.5	2.2	54.9	44.7	35.5	26.4	-	-	53.2	2.6	51.9	42.8	33.6	24.5	-	-
	67	53.2	2.2	53.2	53.2	48.7	39.5	30.4	-	48.9	2.6	48.9	48.9	45.6	36.4	27.2	-
	62	50.5	2.1	50.5	50.5	50.5	41.3	32.1	22.9	47.4	2.6	47.4	47.4	47.4	38.2	29.0	19.9
	57	50.3	2.2	50.3	50.3	50.3	41.1	31.9	22.7	47.4	2.6	47.4	47.4	47.4	38.2	29.0	19.9
		95°F								**105°F**							
1250	77	46.6	3.1	22.9	18.0	13.2	-	-	-	41.4	3.5	24.3	15.2	11.5	-	-	-
	72	42.8	3.1	31.0	25.4	19.8	14.3	-	-	38.3	3.5	29.8	23.7	18.2	12.7	-	-
	67	39.0	3.1	39.0	32.8	26.5	20.9	15.3	-	35.2	3.5	35.2	32.1	24.8	19.4	13.9	-
	62	38.6	3.1	38.6	37.8	29.3	23.7	18.2	12.6	35.2	3.5	35.2	34.7	26.3	20.8	15.3	9.8
1500	77	48.2	3.1	29.9	21.2	14.8	-	-	-	42.8	3.5	30.1	19.5	13.0	-	-	-
	72	44.3	3.1	35.1	28.7	22.3	16.0	-	-	39.6	3.5	33.3	26.9	20.5	14.2	-	-
	67	40.4	3.1	40.4	36.2	29.9	23.5	17.1	-	36.4	3.5	36.4	34.3	28.0	21.7	15.3	-
	62	39.9	3.1	39.9	39.4	33.0	26.7	20.3	13.9	36.4	3.5	36.4	36.0	29.7	23.3	16.9	10.6
	57	40.1	3.1	40.1	39.2	32.8	26.4	20.1	13.7	36.6	3.5	36.6	35.8	29.5	23.1	16.7	10.4
1750	77	49.8	3.0	36.8	24.5	16.5	-	-	-	44.2	3.5	35.9	23.7	14.5	-	-	-
	72	45.7	3.0	39.2	32.1	24.9	17.7	-	-	40.9	3.5	36.7	30.1	22.9	15.6	-	-
	67	41.7	3.0	41.7	39.7	33.2	26.1	18.9	-	37.6	3.5	37.6	36.5	31.3	24.0	16.8	-
	62	41.3	3.0	41.3	41.0	36.8	29.6	22.4	15.2	37.6	3.5	37.6	37.4	33.1	25.8	18.5	11.3
	57	41.5	3.0	41.5	41.0	36.5	29.3	22.2	15.0	37.8	3.5	37.8	37.4	32.8	25.6	18.3	11.1
2000	77	51.4	3.0	43.7	27.7	18.2	-	-	-	45.6	3.4	41.7	28.0	16.0	-	-	-
	72	47.2	3.0	43.4	35.4	27.4	19.4	-	-	42.2	3.4	40.2	33.4	25.2	17.1	-	-
	67	43.1	3.0	43.1	43.1	36.6	28.6	20.6	-	38.8	3.4	38.8	38.8	34.5	26.3	18.2	-
	62	42.6	3.0	42.6	42.6	40.5	32.5	24.5	16.5	38.7	3.4	38.7	38.7	36.4	28.3	20.2	12.0
	57	42.8	3.0	42.8	42.8	40.2	32.2	24.3	16.3	39.0	3.5	39.0	39.0	36.2	28.0	19.9	11.8
2250	72	48.1	3.0	46.2	38.1	29.6	21.0	-	-	43.0	3.4	42.0	35.0	26.5	17.9	-	-
	67	43.9	3.0	43.9	43.9	39.5	30.9	22.4	-	39.5	3.4	39.5	39.5	36.1	27.6	19.0	-
	62	43.4	3.0	43.4	43.4	42.4	33.8	25.2	16.7	39.5	3.4	39.5	39.5	37.6	29.0	20.5	11.9
	57	43.6	3.0	43.6	43.6	42.3	33.8	25.2	16.7	39.7	3.5	39.7	39.7	37.5	28.9	20.4	11.8
2500	72	49.0	3.0	49.0	40.9	31.7	22.6	-	-	43.9	3.4	43.9	36.6	27.7	18.7	-	-
	67	44.7	3.0	44.7	44.7	42.4	33.2	24.1	-	40.3	3.4	40.3	40.3	37.8	28.8	19.9	-
	62	44.2	3.0	44.2	44.2	44.2	35.1	26.0	16.8	40.3	3.5	40.3	40.3	38.7	29.8	20.8	11.9
	57	44.5	3.0	44.5	44.5	44.5	35.3	26.2	17.0	40.5	3.5	40.5	40.5	38.7	29.8	20.8	11.9

XN060 Low (5.0 Ton) (Continued)

Air on Evaporator Coil		Temperature of Air on Condenser Coil															
		Total Capacity[1] (MBh)	Total Input (kW)[2]	Sensible Capacity (MBh) Return Dry Bulb (°F)						Total Capacity[1] (MBh)	Total Input (kW)[2]	Sensible Capacity (MBh) Return Dry Bulb (°F)					
CFM	WB (°F)			90	85	80	75	70	65			90	85	80	75	70	65
		115°F								125°F							
1250	77	36.2	3.9	25.7	12.4	9.9	-	-	-	31.1	4.3	29.0	12.7	8.2	-	-	-
	72	33.8	3.9	28.6	21.9	16.5	11.2	-	-	29.3	4.3	28.0	20.2	14.9	9.6	-	-
	67	31.4	3.9	31.4	31.4	23.2	17.8	12.4	-	27.6	4.3	27.6	27.6	21.5	16.2	11.0	-
	62	31.8	3.9	31.8	31.5	23.2	17.9	12.5	7.1	28.4	4.3	28.4	28.4	20.2	14.9	9.6	4.4
1500	77	37.4	3.9	30.4	17.7	11.2	-	-	-	32.0	4.4	30.7	18.0	9.4	-	-	-
	72	34.9	3.9	31.4	25.1	18.7	12.4	-	-	30.2	4.4	29.6	23.2	16.9	10.6	-	-
	67	32.4	3.9	32.4	32.4	26.2	19.9	13.5	-	28.5	4.3	28.5	28.5	24.4	18.1	11.7	-
	62	32.8	3.9	32.8	32.6	26.3	19.9	13.6	7.2	29.2	4.3	29.2	29.2	22.9	16.6	10.2	3.9
	57	33.0	3.9	33.0	32.4	26.1	19.7	13.4	7.0	29.5	4.4	29.5	29.1	22.7	16.4	10.0	3.7
1750	77	38.6	3.9	35.1	23.0	12.5	-	-	-	33.0	4.4	32.3	23.3	10.5	-	-	-
	72	36.0	3.9	34.2	28.2	20.9	13.6	-	-	31.1	4.4	31.1	26.3	18.9	11.5	-	-
	67	33.4	3.9	33.4	33.4	29.3	22.0	14.6	-	29.3	4.4	29.3	29.3	27.3	19.9	12.5	-
	62	33.8	3.9	33.8	33.7	29.4	22.0	14.7	7.4	30.1	4.4	30.1	30.1	25.6	18.2	10.9	3.5
	57	34.0	3.9	34.0	33.8	29.1	21.8	14.5	7.1	30.3	4.4	30.3	30.1	25.4	18.0	10.6	3.2
2000	77	39.7	3.9	39.7	28.3	13.8	-	-	-	33.9	4.4	33.9	28.6	11.7	-	-	-
	72	37.1	3.9	37.1	31.4	23.1	14.8	-	-	32.0	4.4	32.0	29.4	20.9	12.4	-	-
	67	34.4	3.9	34.4	34.4	32.3	24.0	15.7	-	30.1	4.4	30.1	30.1	30.1	21.7	13.3	-
	62	34.9	3.9	34.9	34.9	32.4	24.1	15.8	7.5	31.0	4.4	31.0	31.0	28.4	19.9	11.5	3.0
	57	35.1	3.9	35.1	35.1	32.2	23.9	15.6	7.3	31.2	4.4	31.2	31.2	28.1	19.7	11.2	2.8
2250	72	37.9	3.9	37.9	31.9	23.4	14.8	-	-	32.8	4.4	32.8	28.8	20.3	11.7	-	-
	67	35.2	3.9	35.2	35.2	32.7	24.2	15.7	-	30.8	4.4	30.8	30.8	29.4	20.9	12.3	-
	62	35.6	3.9	35.6	35.6	32.8	24.3	15.8	7.2	31.7	4.4	31.7	31.7	28.1	19.5	11.0	2.5
	57	35.8	3.9	35.8	35.8	32.6	24.0	15.5	7.0	31.9	4.4	31.9	31.9	27.7	19.2	10.7	2.1
2500	72	38.7	3.9	38.7	32.4	23.7	14.9	-	-	33.5	4.4	33.5	28.2	19.6	11.0	-	-
	67	35.9	3.9	35.9	35.9	33.2	24.4	15.6	-	31.5	4.4	31.5	31.5	28.6	20.0	11.4	-
	62	36.4	3.9	36.4	36.4	33.2	24.5	15.7	6.9	32.4	4.4	32.4	32.4	27.7	19.2	10.6	2.0
	57	36.6	3.9	36.6	36.6	33.0	24.2	15.5	6.7	32.7	4.4	32.7	32.7	27.2	18.7	10.1	1.5

1. These capacities are gross ratings. For net capacity, deduct air blower motor, MBh = 3.415 x kW. Refer to the appropriate Blower Performance Table for the kW of the supply air blower motor.
2. These ratings include the condenser fan motors (total 1 kW) and the compressor motors but not the supply air blower motor.

XN060 High (5.0 Ton)

Air on Evaporator Coil		Temperature of Air on Condenser Coil															
		Total Capacity[1] (MBh)	Total Input (kW)[2]	Sensible Capacity (MBh) Return Dry Bulb (°F)						Total Capacity[1] (MBh)	Total Input (kW)[2]	Sensible Capacity (MBh) Return Dry Bulb (°F)					
CFM	WB (°F)			90	85	80	75	70	65			90	85	80	75	70	65
		75°F								85°F							
1250	77	73.3	3.5	32.7	27.1	22.0	-	-	-	67.5	4.0	30.0	24.9	19.8	-	-	-
	72	66.6	3.4	40.2	35.1	30.0	24.8	-	-	62.0	3.9	38.2	33.1	28.0	22.9	-	-
	67	60.0	3.4	47.8	43.1	37.9	32.8	27.6	-	56.5	3.8	46.4	41.3	36.2	31.1	26.0	-
	62	55.7	3.3	55.7	55.5	46.8	41.7	36.5	31.4	52.6	3.8	52.6	52.5	44.5	39.3	34.2	29.1
1500	77	75.7	3.6	35.7	29.8	23.8	-	-	-	69.6	4.0	33.3	27.4	21.5	-	-	-
	72	68.9	3.5	44.4	38.4	32.5	26.5	-	-	63.9	3.9	42.2	36.3	30.4	24.5	-	-
	67	62.0	3.4	53.0	47.1	41.1	35.2	29.2	-	58.3	3.9	51.1	45.2	39.3	33.4	27.5	-
	62	57.5	3.3	57.5	57.4	50.7	44.8	38.8	32.9	54.3	3.8	54.3	54.2	48.3	42.4	36.5	30.6
	57	57.4	3.3	57.4	57.4	52.2	46.2	40.3	34.3	54.4	3.8	54.4	54.4	49.1	43.2	37.3	31.4
1750	77	78.2	3.6	38.8	32.5	25.7	-	-	-	71.7	4.0	36.6	29.9	23.2	-	-	-
	72	71.1	3.5	48.5	41.8	35.0	28.2	-	-	65.9	4.0	46.2	39.5	32.8	26.1	-	-
	67	64.0	3.4	58.3	51.1	44.3	37.6	30.8	-	60.0	3.9	55.8	49.2	42.5	35.8	29.1	-
	62	59.4	3.3	59.4	59.3	54.7	47.9	41.2	34.4	55.9	3.8	55.9	55.9	52.1	45.4	38.7	32.0
	57	59.3	3.3	59.3	59.3	56.2	49.5	42.7	36.0	56.0	3.8	56.0	56.0	53.0	46.3	39.6	32.9
2000	77	80.6	3.6	41.8	35.1	27.6	-	-	-	73.8	4.1	39.9	32.4	24.9	-	-	-
	72	73.3	3.5	52.7	45.1	37.5	30.0	-	-	67.8	4.0	50.2	42.7	35.2	27.8	-	-
	67	66.0	3.4	63.5	55.1	47.5	39.9	32.4	-	61.8	3.9	60.6	53.1	45.6	38.1	30.6	-
	62	61.2	3.4	61.2	61.2	58.6	51.1	43.5	35.9	57.5	3.8	57.5	57.5	56.0	48.5	41.0	33.5
	57	61.1	3.3	61.1	61.1	60.3	52.7	45.2	37.6	57.6	3.8	57.6	57.6	56.9	49.4	41.9	34.4
2250	72	74.4	3.5	56.6	48.3	40.0	31.8	-	-	68.5	4.0	54.0	45.8	37.6	29.5	-	-
	67	67.0	3.4	65.8	59.1	50.7	42.4	34.2	-	62.5	3.9	61.9	56.9	48.7	40.5	32.3	-
	62	62.2	3.4	62.2	62.2	60.9	52.6	44.3	36.1	58.2	3.8	58.2	58.2	57.4	49.2	41.0	32.8
	57	62.0	3.4	62.0	62.0	61.6	53.4	45.1	36.8	58.3	3.8	58.3	58.3	57.9	49.7	41.5	33.3
2500	72	75.5	3.5	60.5	51.5	42.6	33.6	-	-	69.3	4.0	57.8	48.9	40.0	31.1	-	-
	67	68.0	3.4	68.0	63.0	53.9	44.9	35.9	-	63.2	3.9	63.2	60.7	51.8	42.9	34.0	-
	62	63.1	3.4	63.1	63.1	63.1	54.1	45.2	36.2	58.8	3.8	58.8	58.8	58.8	49.9	41.0	32.1
	57	63.0	3.4	63.0	63.0	63.0	54.0	45.1	36.1	58.9	3.9	58.9	58.9	58.9	50.0	41.1	32.2
		95°F								105°F							
1250	77	61.7	4.5	27.3	22.7	17.6	-	-	-	57.4	5.0	24.2	21.0	15.9	-	-	-
	72	57.4	4.4	36.2	31.1	26.0	20.9	-	-	53.1	5.0	34.3	29.3	24.2	19.2	-	-
	67	53.1	4.3	45.1	39.6	34.5	29.4	24.3	-	48.9	4.9	44.4	37.5	32.5	27.4	22.4	-
	62	49.6	4.2	49.6	49.6	42.1	37.0	31.9	26.9	46.6	4.8	46.6	46.6	38.8	33.7	28.7	23.6
1500	77	63.5	4.5	30.8	25.0	19.1	-	-	-	58.9	5.0	29.1	23.2	17.4	-	-	-
	72	59.0	4.4	40.0	34.2	28.3	22.5	-	-	54.5	5.0	38.1	32.3	26.5	20.6	-	-
	67	54.6	4.3	49.2	43.4	37.5	31.7	25.8	-	50.1	4.9	47.2	41.3	35.5	29.7	23.8	-
	62	51.0	4.3	51.0	51.0	45.8	40.0	34.1	28.3	47.8	4.9	47.8	47.8	42.4	36.5	30.7	24.9
	57	51.3	4.3	51.3	51.3	46.0	40.1	34.3	28.4	47.8	4.9	47.8	47.8	42.5	36.6	30.8	25.0
1750	77	65.2	4.5	34.4	27.3	20.7	-	-	-	60.4	5.1	33.9	25.5	18.9	-	-	-
	72	60.6	4.4	43.9	37.3	30.6	24.0	-	-	55.9	5.0	41.9	35.3	28.7	22.1	-	-
	67	56.1	4.3	53.4	47.2	40.6	34.0	27.3	-	51.4	4.9	49.9	45.1	38.5	31.9	25.3	-
	62	52.4	4.3	52.4	52.4	49.6	42.9	36.3	29.7	49.0	4.9	49.0	49.0	46.0	39.4	32.7	26.1
	57	52.7	4.3	52.7	52.7	49.7	43.1	36.4	29.8	49.0	4.9	49.0	49.0	46.1	39.4	32.8	26.2
2000	77	67.0	4.5	37.9	29.6	22.2	-	-	-	61.9	5.1	38.7	27.7	20.3	-	-	-
	72	62.3	4.4	47.7	40.3	32.9	25.5	-	-	57.3	5.0	45.7	38.3	30.9	23.5	-	-
	67	57.6	4.4	57.6	51.0	43.6	36.2	28.8	-	52.7	4.9	52.7	48.9	41.5	34.1	26.7	-
	62	53.8	4.3	53.8	53.8	53.3	45.9	38.5	31.1	50.2	4.9	50.2	50.2	49.6	42.2	34.8	27.4
	57	54.1	4.3	54.1	54.1	53.4	46.0	38.6	31.2	50.3	4.9	50.3	50.3	49.6	42.3	34.9	27.5
2250	72	62.7	4.4	51.5	43.4	35.2	27.1	-	-	57.6	5.0	49.4	41.3	33.2	25.1	-	-
	67	58.0	4.4	58.0	54.7	46.7	38.6	30.4	-	53.0	4.9	53.0	51.1	44.5	36.4	28.3	-
	62	54.2	4.3	54.2	54.2	53.9	45.8	37.7	29.6	50.5	4.9	50.5	50.5	50.1	42.0	33.9	25.8
	57	54.5	4.3	54.5	54.5	54.2	46.0	37.9	29.8	50.5	4.9	50.5	50.5	50.2	42.1	34.0	25.9
2500	72	63.1	4.5	55.2	46.4	37.5	28.7	-	-	57.8	5.0	53.0	44.2	35.4	26.6	-	-
	67	58.4	4.4	58.4	58.4	49.7	40.9	32.1	-	53.2	4.9	53.2	53.2	47.5	38.7	29.9	-
	62	54.6	4.3	54.6	54.6	54.6	45.7	36.9	28.1	50.7	4.9	50.7	50.7	50.7	41.9	33.1	24.3
	57	54.9	4.3	54.9	54.9	54.9	46.0	37.2	28.4	50.7	4.9	50.7	50.7	50.7	41.9	33.1	24.3

XN060 High (5.0 Ton) (Continued)

Air on Evaporator Coil		Temperature of Air on Condenser Coil															
		Total Capacity[1] (MBh)	Total Input (kW)[2]	Sensible Capacity (MBh) Return Dry Bulb (°F)						Total Capacity[1] (MBh)	Total Input (kW)[2]	Sensible Capacity (MBh) Return Dry Bulb (°F)					
CFM	WB (°F)			90	85	80	75	70	65			90	85	80	75	70	65
		115°F								125°F							
1250	77	53.1	5.6	21.2	19.3	14.3	-	-	-	48.7	6.2	20.6	16.8	12.6	-	-	-
	72	48.9	5.5	32.4	27.4	22.4	17.4	-	-	44.6	6.1	30.6	25.6	20.6	15.6	-	-
	67	44.7	5.5	43.7	35.5	30.5	25.5	20.5	-	40.5	6.1	40.5	33.5	28.5	23.5	18.5	-
	62	43.5	5.4	43.5	43.5	35.5	30.4	25.4	20.4	40.5	6.0	40.5	40.5	32.2	27.2	22.2	17.2
1500	77	54.3	5.6	27.3	21.5	15.7	-	-	-	49.7	6.2	27.2	19.7	13.9	-	-	-
	72	50.0	5.6	36.2	30.4	24.6	18.8	-	-	45.5	6.1	34.3	28.5	22.7	16.9	-	-
	67	45.7	5.5	45.1	39.3	33.5	27.7	21.8	-	41.3	6.1	41.3	37.2	31.4	25.6	19.9	-
	62	44.6	5.4	44.6	44.6	38.9	33.1	27.3	21.5	41.4	6.0	41.4	41.4	35.5	29.7	23.9	18.1
	57	44.3	5.4	44.3	44.3	38.9	33.1	27.3	21.5	40.8	6.0	40.8	40.8	35.4	29.6	23.9	18.1
1750	77	55.6	5.6	33.4	23.7	17.1	-	-	-	50.7	6.2	33.8	22.7	15.3	-	-	-
	72	51.2	5.6	39.9	33.3	26.7	20.2	-	-	46.4	6.1	38.0	31.4	24.8	18.2	-	-
	67	46.8	5.5	46.5	43.0	36.4	29.8	23.2	-	42.1	6.1	42.1	40.9	34.4	27.8	21.2	-
	62	45.6	5.5	45.6	45.6	42.4	35.8	29.2	22.6	42.2	6.0	42.2	42.2	38.8	32.2	25.6	19.0
	57	45.3	5.5	45.3	45.3	42.4	35.8	29.2	22.6	41.7	6.0	41.7	41.7	38.8	32.2	25.6	19.0
2000	77	56.8	5.6	39.6	25.8	18.5	-	-	-	51.7	6.2	40.4	25.6	16.6	-	-	-
	72	52.3	5.6	43.7	36.3	28.9	21.5	-	-	47.3	6.2	41.7	34.3	26.9	19.5	-	-
	67	47.8	5.5	47.8	46.8	39.4	32.0	24.6	-	42.9	6.1	42.9	42.9	37.3	29.9	22.5	-
	62	46.6	5.5	46.6	46.6	45.8	38.4	31.1	23.7	43.0	6.1	43.0	43.0	42.1	34.7	27.4	20.0
	57	46.4	5.5	46.4	46.4	45.9	38.5	31.1	23.7	42.5	6.1	42.5	42.5	42.1	34.7	27.3	19.9
2250	72	52.4	5.6	47.3	39.2	31.1	23.0	-	-	47.3	6.1	45.2	37.1	29.0	21.0	-	-
	67	47.9	5.5	47.9	47.4	42.4	34.3	26.2	-	42.9	6.1	42.9	42.9	40.2	32.1	24.1	-
	62	46.7	5.5	46.7	46.7	46.3	38.3	30.2	22.1	43.0	6.1	43.0	43.0	42.6	34.5	26.4	18.3
	57	46.5	5.5	46.5	46.5	46.2	38.1	30.1	22.0	42.5	6.0	42.5	42.5	42.3	34.2	26.1	18.0
2500	72	52.6	5.6	50.8	42.1	33.3	24.5	-	-	47.3	6.1	47.3	39.9	31.1	22.4	-	-
	67	48.1	5.5	48.1	48.1	45.3	36.5	27.7	-	42.9	6.1	42.9	42.9	42.9	34.3	25.6	-
	62	46.8	5.5	46.8	46.8	46.8	38.1	29.3	20.5	43.0	6.0	43.0	43.0	43.0	34.2	25.5	16.7
	57	46.6	5.5	46.6	46.6	46.6	37.8	29.0	20.2	42.4	6.0	42.4	42.4	42.4	33.7	24.9	16.2

1. These capacities are gross ratings. For net capacity, deduct air blower motor, MBh = 3.415 x kW. Refer to the appropriate Blower Performance Table for the kW of the supply air blower motor.
2. These ratings include the condenser fan motors (total 1 kW) and the compressor motors but not the supply air blower motor.

XN036-060 Heating Capacities

Size (Tons)	Model	Air Over Evaporator Coil		Capacity[1] & kW	Outdoor Temperature (°F @ 72% RH)							
		CFM	DB (°F)		-10	0	10	20	30	40	50	60
036 (3.0)	XN	900	55	MBH	6.6	11.5	16.4	21.3	26.2	31.1	36.1	41.0
				KW	2.02	2.14	2.26	2.38	2.49	2.61	2.73	2.85
			70	MBH	4.6	9.5	14.4	19.3	24.2	29.1	34.0	39.0
				KW	2.55	2.67	2.78	2.90	3.02	3.14	3.26	3.37
			80	MBH	3.3	8.2	13.1	18.1	23.0	27.9	32.8	37.7
				KW	3.02	3.13	3.25	3.37	3.49	3.60	3.72	3.84
		1200	55	MBH	8.0	12.9	17.8	22.8	27.7	32.6	37.5	42.4
				KW	1.69	1.81	1.92	2.04	2.16	2.28	2.39	2.51
			70	MBH	6.0	10.9	15.8	20.7	25.7	30.6	35.5	40.4
				KW	2.21	2.33	2.45	2.56	2.68	2.80	2.92	3.04
			80	MBH	4.7	9.7	14.6	19.5	24.4	29.3	34.2	39.2
				KW	2.68	2.79	2.91	3.03	3.15	3.27	3.38	3.50
		1500	55	MBH	8.3	13.2	18.2	23.1	28.0	32.9	37.8	42.7
				KW	1.51	1.63	1.74	1.86	1.98	2.10	2.21	2.33
			70	MBH	6.3	11.2	16.1	21.1	26.0	30.9	35.8	40.7
				KW	2.03	2.15	2.27	2.39	2.50	2.62	2.74	2.86
			80	MBH	5.1	10.0	14.9	19.8	24.7	29.6	34.6	39.5
				KW	2.50	2.62	2.74	2.85	2.97	3.09	3.21	3.33
048 (4.0)	XN	1200	55	MBH	7.6	14.0	20.3	26.7	33.1	39.4	45.8	52.2
				KW	2.43	2.52	2.62	2.72	2.82	2.91	3.01	3.11
			70	MBH	4.8	11.2	17.6	24.0	30.3	36.7	43.1	49.4
				KW	2.98	3.08	3.18	3.27	3.37	3.47	3.57	3.66
			80	MBH	2.8	9.2	15.5	21.9	28.3	34.6	41.0	47.4
				KW	3.44	3.54	3.64	3.73	3.83	3.93	4.03	4.12
		1600	55	MBH	9.2	15.5	21.9	28.3	34.6	41.0	47.4	53.8
				KW	2.08	2.18	2.28	2.37	2.47	2.57	2.67	2.77
			70	MBH	6.4	12.8	19.2	25.5	31.9	38.3	44.6	51.0
				KW	2.63	2.73	2.83	2.93	3.02	3.12	3.22	3.32
			80	MBH	4.8	11.2	17.5	23.9	30.3	36.7	43.0	49.4
				KW	3.22	3.32	3.42	3.52	3.61	3.71	3.81	3.91
		2000	55	MBH	10.1	16.4	22.8	29.2	35.5	41.9	48.3	54.7
				KW	1.58	1.68	1.78	1.87	1.97	2.07	2.17	2.27
			70	MBH	7.3	13.7	20.1	26.4	32.8	39.2	45.5	51.9
				KW	2.14	2.23	2.33	2.43	2.53	2.62	2.72	2.82
			80	MBH	5.3	11.6	18.0	24.4	30.8	37.1	43.5	49.9
				KW	2.60	2.69	2.79	2.89	2.99	3.08	3.18	3.28
060 (5.0)	XN	1500	55	MBH	5.9	13.9	21.9	29.9	38.0	46.0	54.0	62.0
				KW	2.90	3.02	3.13	3.25	3.37	3.49	3.60	3.72
			70	MBH	2.9	10.9	18.9	26.9	35.0	43.0	51.0	59.0
				KW	3.43	3.55	3.67	3.79	3.90	4.02	4.14	4.26
			80	MBH	0.6	8.6	16.6	24.6	32.7	40.7	48.7	56.7
				KW	3.91	4.03	4.14	4.26	4.38	4.50	4.62	4.73
		2000	55	MBH	8.1	16.1	24.1	32.1	40.1	48.2	56.2	64.2
				KW	2.60	2.72	2.83	2.95	3.07	3.19	3.30	3.42
			70	MBH	5.0	13.0	21.1	29.1	37.1	45.1	53.1	61.2
				KW	3.12	3.24	3.36	3.47	3.59	3.71	3.83	3.94
			80	MBH	2.7	10.7	18.8	26.8	34.8	42.8	50.9	58.9
				KW	3.59	3.71	3.83	3.95	4.07	4.18	4.30	4.42
		2500	55	MBH	12.2	20.2	28.2	36.3	44.3	52.3	60.3	68.4
				KW	2.63	2.74	2.86	2.98	3.10	3.21	3.33	3.45
			70	MBH	9.2	17.2	25.2	33.3	41.3	49.3	57.3	65.4
				KW	3.16	3.28	3.40	3.51	3.63	3.75	3.87	3.98
			80	MBH	6.9	14.9	23.0	31.0	39.0	47.0	55.1	63.1
				KW	3.64	3.76	3.87	3.99	4.11	4.23	4.34	4.46

1. These capacities do not include the supply air blower motor heat. For net capacity, add motor heat, MBh = 3.415 x kW.

Airflow Performance

ZE036-072 Side Duct Application

ZE036 (3 Ton Belt Drive) Side Duct

Air Flow (CFM)	Available External Static Pressure - IWG[1]																			
	0.2		0.4		0.6		0.8		1		1.2		1.4		1.6		1.8		2	
	RPM	BHP	RPM	BHP	RPM	BHP	RPM	BHP	RPM	BHP	RPM	BHP	RPM	BHP	RPM	BHP	RPM	BHP	RPM	BHP
	Field Supplied Drive				Standard Drive Option								High Static Drive Option							
800	634	0.28	735	0.34	828	0.40	914	0.47	995	0.55	1070	0.63	1140	0.72	1207	0.81	1270	0.90	1332	0.98
1000	659	0.34	760	0.40	853	0.46	939	0.53	1019	0.61	1094	0.69	1165	0.77	1232	0.87	1295	0.95	1356	1.05
1200	685	0.42	786	0.47	879	0.54	965	0.61	1045	0.69	1120	0.77	1191	0.86	1258	0.94	1321	1.04	1382	1.12
1400	716	0.53	816	0.58	909	0.65	995	0.72	1076	0.79	1151	0.88	1221	0.96	1288	1.05	1352	1.15	1413	1.23
1600	752	0.66	852	0.72	945	0.78	1032	0.86	1112	0.93	1187	1.02	1258	1.10	1324	1.19	1388	1.27	1449	1.37
																			FS4	

1. Blower performance includes gas heat exchangers and 1” filters. See STATIC RESISTANCE table for additional applications.
2. See RPM SELECTION table to determine desired motor sheave setting and to determine the maximum continuous BHP.
3. kW = BHP x 0.932.
4. Field Supplied Drive.

ZE048 (4 Ton Belt Drive) Side Duct

Air Flow (CFM)	Available External Static Pressure - IWG[1]																			
	0.2		0.4		0.6		0.8		1		1.2		1.4		1.6		1.8		2	
	RPM	BHP	RPM	BHP	RPM	BHP	RPM	BHP	RPM	BHP	RPM	BHP	RPM	BHP	RPM	BHP	RPM	BHP	RPM	BHP
	Field Supplied Drive						Standard Drive Option								High Static Drive Option					
1000	703	0.27	786	0.42	866	0.49	942	0.58	1016	0.67	1087	0.76	1155	0.85	1221	0.96	1284	1.05	1345	1.16
1200	733	0.33	817	0.47	896	0.56	973	0.64	1047	0.73	1118	0.82	1186	0.92	1252	1.01	1315	1.11	1376	1.21
1400	770	0.42	853	0.56	933	0.63	1010	0.73	1083	0.81	1154	0.90	1222	1.00	1288	1.10	1352	1.19	1413	1.30
1600	811	0.55	895	0.67	974	0.76	1051	0.84	1125	0.94	1196	1.02	1264	1.12	1330	1.22	1393	1.32	1454	1.42
1800	857	0.73	940	0.84	1020	0.93	1097	1.01	1171	1.10	1242	1.19	1310	1.29	1375	1.38	1439	1.49	1500	1.59
2000	907	0.95	990	1.05	1070	1.14	1146	1.22	1220	1.31	1291	1.40	1359	1.50	1425	1.59	1488	1.70	1550	1.79
																			FS4	

1. Blower performance includes gas heat exchangers and 1” filters. See STATIC RESISTANCE table for additional applications.
2. See RPM SELECTION table to determine desired motor sheave setting and to determine the maximum continuous BHP.
3. kW = BHP x 0.932.
4. Field Supplied Drive.

ZE060 (5 Ton Belt Drive) Side Duct

Air Flow (CFM)	Available External Static Pressure - IWG[1]																			
	0.2		0.4		0.6		0.8		1		1.2		1.4		1.6		1.8		2	
	RPM	BHP	RPM	BHP	RPM	BHP	RPM	BHP	RPM	BHP	RPM	BHP	RPM	BHP	RPM	BHP	RPM	BHP	RPM	BHP
	Field Supplied Drive						Standard Drive Option										High Static Drive Option			
1200	733	0.39	817	0.47	896	0.56	973	0.64	1047	0.73	1118	0.82	1186	0.92	1252	1.01	1315	1.11	1376	1.21
1400	770	0.47	853	0.56	933	0.63	1010	0.73	1083	0.81	1154	0.91	1222	1.00	1288	1.10	1352	1.19	1413	1.30
1600	811	0.60	895	0.67	974	0.76	1051	0.84	1125	0.94	1196	1.02	1264	1.12	1330	1.22	1393	1.32	1454	1.43
1800	857	0.77	940	0.84	1020	0.93	1097	1.01	1171	1.10	1242	1.19	1310	1.29	1375	1.38	1439	1.49	1500	1.60
2000	907	0.98	990	1.05	1070	1.14	1146	1.22	1220	1.31	1291	1.40	1359	1.50	1425	1.60	1488	1.70	1550	1.80
2200	960	1.23	1043	1.31	1123	1.39	1199	1.48	1273	1.56	1344	1.66	1412	1.75	1478	1.85	1541	1.96	1602	2.05
2400	1015	1.52	1099	1.61	1178	1.68	1255	1.76	1329	1.86	1400	1.96	1468	2.05	1534	2.15	1597	2.24	1658	2.35
2600	1074	1.86	1157	1.93	1237	2.02	1314	2.10	1387	2.19	1458	2.28	-	-	-	-	-	-	-	-

1. Blower performance includes gas heat exchangers and 1” filters. See STATIC RESISTANCE table for additional applications.
2. See RPM SELECTION table to determine desired motor sheave setting and to determine the maximum continuous BHP.
3. kW = BHP x 0.932.
4. Field Supplied Drive.

ZE072 (6 Ton Belt Drive) Side Duct

Air Flow (CFM)	Available External Static Pressure - IWG[1]																			
	0.2		0.4		0.6		0.8		1		1.2		1.4		1.6		1.8		2	
	RPM	BHP	RPM	BHP	RPM	BHP	RPM	BHP	RPM	BHP	RPM	BHP	RPM	BHP	RPM	BHP	RPM	BHP	RPM	BHP
	FSD[4]		Standard Static Drive Option														High Static Drive Option			
1600	917	0.28	975	0.48	1027	0.63	1075	0.75	1120	0.84	1166	0.93	1213	1.02	1265	1.13	1323	1.26	1390	1.44
1800	945	0.44	1004	0.64	1056	0.79	1104	0.91	1149	1.00	1194	1.09	1242	1.18	1294	1.29	1352	1.43	1418	1.60
2000	981	0.65	1039	0.84	1091	0.99	1139	1.11	1184	1.21	1230	1.30	1277	1.39	1329	1.50	1387	1.63	1454	1.80
2200	1023	0.90	1081	1.09	1133	1.24	1181	1.36	1226	1.46	1272	1.55	1319	1.64	1371	1.75	1429	1.88	1496	2.06
2400	1072	1.19	1130	1.39	1182	1.54	1230	1.66	1276	1.75	1321	1.84	1369	1.93	1420	2.04	1478	2.17	1545	2.35
2600	1128	1.53	1186	1.73	1238	1.88	1286	1.99	1332	2.09	1377	2.18	1425	2.27	1476	2.38	1534	2.51	1601	2.69
2800	1191	1.91	1249	2.10	1301	2.25	1349	2.37	1394	2.47	1440	2.55	1487	2.65	1539	2.75	1597	2.89	1664	3.06
3000	1260	2.32	1318	2.52	1370	2.67	1418	2.79	1463	2.88	1509	2.97	1556	3.06	1608	3.17	1666	3.30	----	----

1. Blower performance includes gas heat exchangers and 1” filters. See STATIC RESISTANCE table for additional applications.
2. See RPM SELECTION table to determine desired motor sheave setting and to determine the maximum continuous BHP.
3. 1kW = BHP x 0.862.
4. Field Supplied Drive.

ZE036 - 060 (3-5 Ton Direct Drive) Side Duct

UNIT TONNAGE	MOTOR[1] SPEED	AVAILABLE EXTERNAL STATIC PRESSURE - IWG[2]																	
		0.2		0.3		0.4		0.5		0.6		0.7		0.8		0.9		1.0	
		CFM	WATTS	CFM	WATTS	CFM	WATTS	CFM	WATTS	CFM	WATTS	CFM	WATTS	CFM	WATTS	CFM	WATTS	CFM	WATTS
3[3]	5 (HI)	1574	320	1530	335	1488	349	1451	363	1411	376	1374	390	1331	403	1292	417	1249	430
	4 (MED/HI)	1480	263	1433	276	1389	290	1347	303	1303	316	1257	329	1208	343	1153	358	1080	374
	3 (MED)	1332	208	1286	221	1241	234	1195	246	1146	258	1097	272	1031	288	962	303	919	313
	2 (MED/LOW)	1227	171	1178	183	1129	195	1076	207	1021	220	953	235	891	248	-	-	-	-
	1 (LOW)	1075	130	992	134	930	145	858	158	-	-	-	-	-	-	-	-	-	-
4[3]	5 (HI)	-	-	2067	696	2027	714	1991	734	1953	749	1910	764	1860	769	1770	743	1621	685
	4 (MED/HI)	1913	539	1877	557	1839	571	1798	585	1764	602	1721	619	1677	638	1621	653	1545	639
	3 (MED)	1722	408	1682	426	1634	438	1597	455	1554	472	1506	490	1450	505	1404	521	1370	536
	2 (MED/LOW)	1475	321	1435	335	1388	352	1359	362	1319	376	1271	393	1220	411	1186	422	1142	437
	1 (LOW)	1332	223	1290	237	1232	247	-	-	-	-	-	-	-	-	-	-	-	-
5[3]	5 (HI)	2245	883	2247	931	2236	950	2211	964	2171	979	2114	971	2034	940	1948	898	1855	854
	4 (MED/HI)	2135	771	2116	784	2108	808	2078	826	2041	844	2004	859	1955	861	1886	843	1792	806
	3 (MED)	2010	637	1989	656	1975	675	1938	696	1900	715	1867	730	1822	740	1784	756	1716	748
	2 (MED/LOW)	1672	408	1633	426	1586	438	1550	455	1509	472	1462	490	1408	505	1363	521	1330	536
	1 (LOW)	1562	327	1529	339	1491	356	-	-	-	-	-	-	-	-	-	-	-	-

1. Factory set on medium speed tap.
2. Includes allowances for a wet evaporator coil, 1” filters, and the heat exchangers. Refer to STATIC RESISTANCES Table for resistance values.
3. Side Duct application (230 Volts)

ZE036-072 Bottom Duct Application

ZE036 (3 Ton Belt Drive) Bottom Duct

Air Flow (CFM)	Available External Static Pressure - IWG[1]																			
	0.2		0.4		0.6		0.8		1		1.2		1.4		1.6		1.8		2	
	RPM	BHP	RPM	BHP	RPM	BHP	RPM	BHP	RPM	BHP	RPM	BHP	RPM	BHP	RPM	BHP	RPM	BHP	RPM	BHP
	Field Supplied Drive				Standard Drive Option								High Static Drive Option							
800	613	0.29	724	0.34	826	0.41	920	0.48	1007	0.56	1089	0.63	1165	0.71	1237	0.80	1306	0.88	1372	0.98
1000	640	0.34	751	0.41	853	0.47	947	0.53	1034	0.61	1116	0.69	1192	0.77	1264	0.86	1333	0.95	1399	1.03
1200	669	0.43	779	0.48	881	0.55	975	0.61	1063	0.69	1144	0.77	1220	0.85	1293	0.94	1361	1.02	1427	1.12
1400	702	0.52	812	0.59	914	0.65	1009	0.71	1096	0.79	1177	0.87	1254	0.96	1326	1.04	1394	1.13	1460	1.21
1600	741	0.66	852	0.71	954	0.78	1048	0.85	1135	0.93	1217	1.00	1293	1.08	1365	1.17	1434	1.25	1500	1.35
																			FS4	

1. Blower performance includes gas heat exchangers and 1” filters. See STATIC RESISTANCE table for additional applications.
2. See RPM SELECTION table to determine desired motor sheave setting and to determine the maximum continuous BHP.
3. kW = BHP x 0.932.

ZE048 (4 Ton Belt Drive) Bottom Duct

`Air Flow (CFM)	Available External Static Pressure - IWG[1]																			
	0.2		0.4		0.6		0.8		1		1.2		1.4		1.6		1.8		2	
	RPM	BHP	RPM	BHP	RPM	BHP	RPM	BHP	RPM	BHP	RPM	BHP	RPM	BHP	RPM	BHP	RPM	BHP	RPM	BHP
	Field Supplied Drive										Standard Drive Option						High Static Drive Option			
1000	688	0.34	779	0.42	866	0.50	949	0.59	1029	0.67	1107	0.77	1181	0.85	1253	0.95	1322	1.05	1388	1.15
1200	722	0.40	812	0.48	899	0.56	983	0.64	1063	0.73	1140	0.82	1215	0.90	1286	1.01	1355	1.11	1422	1.20
1400	761	0.48	852	0.56	939	0.64	1022	0.73	1103	0.81	1180	0.89	1254	0.99	1326	1.08	1395	1.19	1462	1.29
1600	807	0.61	897	0.68	984	0.76	1068	0.84	1148	0.93	1225	1.02	1300	1.12	1371	1.21	1440	1.31	1507	1.40
1800	856	0.77	947	0.84	1034	0.93	1118	1.00	1198	1.10	1275	1.18	1349	1.28	1421	1.37	1490	1.47	1557	1.57
2000	910	0.97	1001	1.04	1088	1.13	1172	1.21	1252	1.30	1329	1.39	1403	1.48	1475	1.57	1544	1.68	1611	1.77
																			FS4	

1. Blower performance includes gas heat exchangers and 1” filters. See STATIC RESISTANCE table for additional applications.
2. See RPM SELECTION table to determine desired motor sheave setting and to determine the maximum continuous BHP.
3. kW = BHP x 0.932.

ZE060 (5 Ton Belt Drive) Bottom Duct

Air Flow (CFM)	Available External Static Pressure - IWG[1]																			
	0.2		0.4		0.6		0.8		1		1.2		1.4		1.6		1.8		2	
	RPM	BHP	RPM	BHP	RPM	BHP	RPM	BHP	RPM	BHP	RPM	BHP	RPM	BHP	RPM	BHP	RPM	BHP	RPM	BHP
	Field Supplied Drive						Standard Drive Option								High Static Drive Option					
1200	722	0.40	812	0.48	899	0.56	983	0.64	1063	0.73	1140	0.82	1215	0.90	1286	1.01	1355	1.11	1422	1.20
1400	761	0.48	852	0.56	939	0.64	1022	0.73	1103	0.81	1180	0.89	1254	0.99	1326	1.08	1395	1.19	1462	1.29
1600	807	0.61	897	0.68	984	0.76	1068	0.84	1148	0.93	1225	1.02	1300	1.12	1371	1.21	1440	1.31	1507	1.40
1800	856	0.77	947	0.84	1034	0.93	1118	1.00	1198	1.10	1275	1.18	1349	1.28	1421	1.37	1490	1.47	1557	1.57
2000	910	0.97	1001	1.04	1088	1.13	1172	1.21	1252	1.30	1329	1.39	1403	1.48	1475	1.57	1544	1.68	1611	1.77
2200	968	1.22	1059	1.30	1146	1.37	1229	1.46	1309	1.54	1387	1.64	1461	1.73	1533	1.83	1602	1.92	1668	2.03
2400	1029	1.51	1119	1.58	1206	1.67	1290	1.74	1370	1.84	1448	1.92	1522	2.02	1593	2.11	1663	2.21	1729	2.31
2600	1093	1.84	1183	1.91	1270	1.98	1354	2.07	1434	2.15	1511	2.25	1586	2.34	-	-	-	-	-	-
																			FS4	

1. Blower performance includes gas heat exchangers and 1” filters. See STATIC RESISTANCE table for additional applications.
2. See RPM SELECTION table to determine desired motor sheave setting and to determine the maximum continuous BHP.
3. kW = BHP x 0.932.

ZE072 (6 Ton Belt Drive) Bottom Duct

Air Flow (CFM)	Available External Static Pressure - IWG[1]																			
	0.2		0.4		0.6		0.8		1		1.2		1.4		1.6		1.8		2	
	RPM	BHP	RPM	BHP	RPM	BHP	RPM	BHP	RPM	BHP	RPM	BHP	RPM	BHP	RPM	BHP	RPM	BHP	RPM	BHP
	Field Supplied Drive				Standard Static Drive Option										High Static Drive Option					
1600	829	0.46	914	0.52	988	0.61	1055	0.71	1115	0.83	1170	0.95	1222	1.09	1273	1.23	1324	1.36	1377	1.50
1800	858	0.63	943	0.70	1017	0.78	1084	0.89	1144	1.00	1199	1.13	1251	1.26	1302	1.40	1353	1.54	1406	1.67
2000	898	0.84	983	0.90	1057	0.99	1124	1.09	1184	1.21	1239	1.34	1291	1.47	1342	1.61	1393	1.75	1446	1.88
2200	945	1.08	1030	1.15	1104	1.23	1171	1.34	1231	1.45	1286	1.58	1338	1.72	1389	1.85	1440	1.99	1493	2.13
2400	997	1.37	1081	1.44	1156	1.52	1222	1.62	1282	1.74	1338	1.87	1390	2.00	1441	2.14	1491	2.28	1544	2.41
2600	1052	1.70	1136	1.77	1211	1.85	1277	1.96	1337	2.07	1392	2.20	1445	2.33	1495	2.47	1546	2.61	1599	2.74
2800	1108	2.08	1192	2.14	1267	2.23	1334	2.33	1394	2.45	1449	2.58	1501	2.71	1552	2.85	1603	2.99	1656	3.12
3000	1166	2.50	1250	2.57	1325	2.65	1391	2.75	1451	2.87	1506	3.00	1558	3.13	1609	3.27	----	----	----	----

1. Blower performance includes gas heat exchangers and 1” filters. See STATIC RESISTANCE table for additional applications.
2. See RPM SELECTION table to determine desired motor sheave setting and to determine the maximum continuous BHP.
3. 1kW = BHP x 0.862.

ZE036 - 060 (3-5 Ton Direct Drive) Bottom Duct

UNIT TONNAGE	MOTOR[1] SPEED	AVAILABLE EXTERNAL STATIC PRESSURE - IWG[2]																	
		0.2		0.3		0.4		0.5		0.6		0.7		0.8		0.9		1.0	
		CFM	WATTS	CFM	WATTS	CFM	WATTS	CFM	WATTS	CFM	WATTS	CFM	WATTS	CFM	WATTS	CFM	WATTS	CFM	WATTS
3[3]	5 (HI)	1520	320	1478	335	1438	349	1401	363	1363	376	1327	390	1286	403	1248	417	1207	430
	4 (MED/HI)	1430	263	1384	276	1342	290	1302	303	1259	316	1215	329	1168	343	1114	358	1044	374
	3 (MED)	1287	208	1242	221	1199	234	1155	246	1108	258	1060	272	997	288	930	303	889	313
	2 (MED/LOW)	1185	171	1138	183	1091	195	1041	207	987	220	921	235	862	248	-	-	-	-
	1 (LOW)	1040	130	959	134	900	145	-	-	-	-	-	-	-	-	-	-	-	-
4[3]	5 (HI)	-	-	1995	696	1957	714	1922	734	1885	749	1844	764	1795	769	1709	743	1566	685
	4 (MED/HI)	1846	539	1812	557	1776	571	1736	585	1704	602	1662	619	1619	638	1566	653	1492	639
	3 (MED)	1662	408	1624	426	1577	438	1542	455	1501	472	1454	490	1400	505	1356	521	1323	536
	2 (MED/LOW)	1566	362	1526	380	1480	391	1450	406	1411	423	1363	440	1312	455	1279	469	1235	485
	1 (LOW)	1287	223	1246	237	1190	247	-	-	-	-	-	-	-	-	-	-	-	-
5[3]	5 (HI)	2166	883	2169	931	2158	950	2134	964	2095	979	2040	971	1963	940	1881	898	1791	854
	4 (MED/HI)	2060	771	2042	784	2035	808	2006	826	1970	844	1934	859	1888	861	1821	843	1730	806
	3 (MED)	1940	637	1920	656	1907	675	1870	696	1834	715	1802	730	1759	740	1722	756	1657	748
	2 (MED/LOW)	1688	413	1645	432	1611	451	1575	468	1534	479	1498	497	1461	513	-	-	-	-
	1 (LOW)	1509	327	1477	339	-	-	-	-	-	-	-	-	-	-	-	-	-	-

1. Factory set on medium speed tap.
2. Includes allowances for a wet evaporator coil, 1” filters, and the heat exchangers. Refer to STATIC RESISTANCES Table for resistance values.
3. Bottom Duct application (230 Volts)

XN036-060 Side Duct Application

XN036 (3 Ton Belt Drive) Side Duct

Air Flow (CFM)	Available External Static Pressure - IWG[1]																			
	0.2		0.4		0.6		0.8		1		1.2		1.4		1.6		1.8		2	
	RPM	BHP	RPM	BHP	RPM	BHP	RPM	BHP	RPM	BHP	RPM	BHP	RPM	BHP	RPM	BHP	RPM	BHP	RPM	BHP
	Field Supplied Drive				Standard Drive Option								High Static Drive Option							
800	678	0.31	761	0.39	840	0.47	917	0.56	991	0.65	1062	0.74	1130	0.84	1195	0.94	1259	1.04	1320	1.16
1000	699	0.37	782	0.44	862	0.51	939	0.60	1012	0.69	1083	0.79	1151	0.88	1217	0.99	1280	1.10	1341	1.20
1200	727	0.40	810	0.47	889	0.56	966	0.64	1040	0.73	1110	0.82	1179	0.93	1244	1.02	1308	1.13	1369	1.23
1400	759	0.46	842	0.53	922	0.61	998	0.69	1072	0.79	1143	0.88	1211	0.98	1276	1.08	1340	1.19	1401	1.30
1600	795	0.56	878	0.63	958	0.70	1035	0.79	1108	0.88	1179	0.98	1247	1.07	1313	1.18	1376	1.28	1438	1.39
																			FS4	

1. Blower performance includes 1” filters. See STATIC RESISTANCE table for additional applications.
2. See RPM SELECTION table to determine desired motor sheave setting and to determine the maximum continuous BHP.
3. kW = BHP x 0.932.
4. Field Supplied Drive.

XN048 (4 Ton Belt Drive) Side Duct

Air Flow (CFM)	Available External Static Pressure - IWG[1]																			
	0.2		0.4		0.6		0.8		1		1.2		1.4		1.6		1.8		2	
	RPM	BHP	RPM	BHP	RPM	BHP	RPM	BHP	RPM	BHP	RPM	BHP	RPM	BHP	RPM	BHP	RPM	BHP	RPM	BHP
	Field Supplied Drive								Standard Drive Option										High Drive	
1000	699	0.37	782	0.44	862	0.51	939	0.60	1012	0.69	1083	0.79	1151	0.88	1217	0.99	1280	1.10	1341	1.20
1200	727	0.40	810	0.47	889	0.56	966	0.64	1040	0.73	1110	0.82	1179	0.93	1244	1.02	1308	1.13	1369	1.23
1400	759	0.46	842	0.53	922	0.61	998	0.69	1072	0.79	1143	0.88	1211	0.98	1276	1.08	1340	1.19	1401	1.30
1600	795	0.56	878	0.63	958	0.70	1035	0.79	1108	0.88	1179	0.98	1247	1.07	1313	1.18	1376	1.28	1438	1.39
1800	836	0.68	919	0.76	999	0.84	1075	0.93	1149	1.01	1220	1.11	1288	1.21	1353	1.31	1417	1.41	1478	1.52
2000	880	0.86	963	0.94	1042	1.02	1119	1.11	1193	1.19	1263	1.29	1331	1.39	1397	1.49	1460	1.59	1522	1.70

1. Blower performance includes 1” filters. See STATIC RESISTANCE table for additional applications.
2. See RPM SELECTION table to determine desired motor sheave setting and to determine the maximum continuous BHP.
3. kW = BHP x 0.932.
4. Field Supplied Drive.

XN060 (5 Ton Belt Drive) Side Duct

Air Flow (CFM)	Available External Static Pressure - IWG[1]																			
	0.2		0.4		0.6		0.8		1		1.2		1.4		1.6		1.8		2	
	RPM	BHP	RPM	BHP	RPM	BHP	RPM	BHP	RPM	BHP	RPM	BHP	RPM	BHP	RPM	BHP	RPM	BHP	RPM	BHP
	Field Supplied Drive						Standard Drive Option										High Static Drive			
1200	727	0.40	810	0.47	889	0.56	966	0.64	1040	0.73	1110	0.82	1179	0.93	1244	1.02	1308	1.13	1369	1.23
1400	759	0.46	842	0.53	922	0.61	998	0.69	1072	0.79	1143	0.88	1211	0.98	1276	1.08	1340	1.19	1401	1.30
1600	795	0.56	878	0.63	958	0.70	1035	0.79	1108	0.88	1179	0.98	1247	1.07	1313	1.18	1376	1.28	1438	1.39
1800	836	0.68	919	0.76	999	0.84	1075	0.93	1149	1.01	1220	1.11	1288	1.21	1353	1.31	1417	1.41	1478	1.52
2000	880	0.86	963	0.94	1042	1.02	1119	1.11	1193	1.19	1263	1.29	1331	1.39	1397	1.49	1460	1.59	1522	1.70
2200	926	1.08	1009	1.16	1089	1.24	1166	1.33	1239	1.41	1310	1.51	1378	1.61	1444	1.71	1507	1.82	1568	1.92
2400	976	1.35	1059	1.42	1138	1.51	1215	1.59	1289	1.68	1359	1.77	1428	1.88	1493	1.97	1557	2.08	1618	2.19
2600	1028	1.66	1111	1.73	1190	1.80	1267	1.90	1340	1.98	1411	2.08	1479	2.18	1545	2.28	1608	2.39	-	

1. Blower performance includes 1” filters. See STATIC RESISTANCE table for additional applications.
2. See RPM SELECTION table to determine desired motor sheave setting and to determine the maximum continuous BHP.
3. kW = BHP x 0.932.
4. Field Supplied Drive.

XN036 - 060 (3-5 Ton Direct Drive) Side Duct

UNIT TONNAGE	MOTOR[1] SPEED	AVAILABLE EXTERNAL STATIC PRESSURE - IWG[2]																	
		0.2		0.3		0.4		0.5		0.6		0.7		0.8		0.9		1.0	
		CFM	WATTS	CFM	WATTS	CFM	WATTS	CFM	WATTS	CFM	WATTS	CFM	WATTS	CFM	WATTS	CFM	WATTS	CFM	WATTS
3[3]	5 (HI)	1528	320	1485	335	1445	349	1409	363	1370	376	1334	390	1292	403	1254	417	1213	430
	4 (MED/HI)	1437	263	1391	276	1349	290	1308	303	1265	316	1220	329	1173	343	1119	358	1048	374
	3 (MED)	1293	208	1248	221	1205	234	1160	246	1113	258	1065	272	1001	288	934	303	892	313
	2 (MED/LOW)	1191	171	1144	183	1096	195	1045	207	991	220	925	235	865	248	-	-	-	-
	1 (LOW)	1044	130	963	134	903	145	833	158	-	-	-	-	-	-	-	-	-	-
4[3]	5 (HI)	-	-	2007	696	1968	714	1933	734	1896	749	1855	764	1806	769	1719	743	1574	685
	4 (MED/HI)	1857	539	1822	557	1786	571	1746	585	1713	602	1671	619	1628	638	1574	657	1500	676
	3 (MED)	1672	408	1633	426	1586	438	1550	455	1509	472	1462	490	1408	505	1363	521	1330	536
	2 (MED/LOW)	1475	321	1435	335	1388	352	1359	362	1319	376	1271	393	1220	411	1186	422	1142	437
	1 (LOW)	1293	223	1252	237	1196	247	-	-	-	-	-	-	-	-	-	-	-	-
5[3]	5 (HI)	2245	883	2247	931	2236	950	2211	964	2171	979	2114	971	2034	940	1948	898	1855	854
	4 (MED/HI)	2135	771	2116	784	2108	808	2078	826	2041	844	2004	859	1955	861	1886	843	1792	806
	3 (MED)	2010	637	1989	656	1975	675	1938	696	1900	715	1867	730	1822	740	1784	756	1716	748
	2 (MED/LOW)	1857	539	1822	557	1786	571	1746	585	1713	602	1671	619	1628	638	1574	657	1500	676
	1 (LOW)	1293	223	1252	237	1196	247	-	-	-	-	-	-	-	-	-	-	-	-

1. Factory set on medium speed tap.
2. Includes allowances for a wet evaporator coil and 1” filters. Refer to STATIC RESISTANCES Table for resistance values.
3. Side Duct application (230 Volts)

XN036-060 Bottom Duct Application

XN036 (3 Ton Belt Drive) Bottom Duct

Air Flow (CFM)	Available External Static Pressure - IWG[1]																			
	0.2		0.4		0.6		0.8		1		1.2		1.4		1.6		1.8		2	
	RPM	BHP	RPM	BHP	RPM	BHP	RPM	BHP	RPM	BHP	RPM	BHP	RPM	BHP	RPM	BHP	RPM	BHP	RPM	BHP
	Field Supplied Drive				Standard Drive Option								High Static Drive							
800	661	0.33	751	0.40	838	0.48	922	0.57	1002	0.65	1079	0.75	1153	0.84	1225	0.94	1294	1.04	1361	1.15
1000	685	0.38	775	0.45	862	0.52	945	0.61	1025	0.69	1103	0.79	1177	0.88	1248	0.98	1317	1.08	1384	1.19
1200	714	0.41	805	0.48	892	0.56	975	0.64	1055	0.73	1132	0.82	1207	0.92	1278	1.02	1347	1.12	1414	1.22
1400	749	0.47	840	0.53	927	0.62	1010	0.70	1090	0.79	1167	0.88	1242	0.98	1313	1.07	1382	1.18	1449	1.29
1600	789	0.56	880	0.63	967	0.70	1050	0.79	1130	0.88	1207	0.97	1282	1.06	1353	1.17	1422	1.26	1489	1.37
																			FS4	

1. Blower performance includes 1” filters. See STATIC RESISTANCE table for additional applications.
2. See RPM SELECTION table to determine desired motor sheave setting and to determine the maximum continuous BHP.
3. kW = BHP x 0.932.

XN048 (4 Ton Belt Drive) Bottom Duct

Air Flow (CFM)	Available External Static Pressure - IWG[1]																			
	0.2		0.4		0.6		0.8		1		1.2		1.4		1.6		1.8		2	
	RPM	BHP	RPM	BHP	RPM	BHP	RPM	BHP	RPM	BHP	RPM	BHP	RPM	BHP	RPM	BHP	RPM	BHP	RPM	BHP
	Field Supplied Drive						Standard Drive Option										High Static Drive			
1200	714	0.41	805	0.48	892	0.56	975	0.64	1055	0.73	1132	0.82	1207	0.92	1278	1.02	1347	1.12	1414	1.22
1400	749	0.47	840	0.53	927	0.62	1010	0.70	1090	0.79	1167	0.88	1242	0.98	1313	1.07	1382	1.18	1449	1.29
1600	789	0.56	880	0.63	967	0.70	1050	0.79	1130	0.88	1207	0.97	1282	1.06	1353	1.17	1422	1.26	1489	1.37
1800	833	0.69	924	0.77	1011	0.84	1094	0.93	1174	1.01	1251	1.11	1326	1.20	1397	1.30	1466	1.40	1533	1.51
2000	881	0.86	971	0.94	1058	1.01	1142	1.10	1222	1.19	1299	1.28	1373	1.37	1445	1.48	1514	1.58	1580	1.68
																			FS4	

1. Blower performance includes 1” filters. See STATIC RESISTANCE table for additional applications.
2. See RPM SELECTION table to determine desired motor sheave setting and to determine the maximum continuous BHP.
3. kW = BHP x 0.932.

XN060 (5 Ton Belt Drive) Bottom Duct

Air Flow (CFM)	Available External Static Pressure - IWG[1]																			
	0.2		0.4		0.6		0.8		1		1.2		1.4		1.6		1.8		2	
	RPM	BHP	RPM	BHP	RPM	BHP	RPM	BHP	RPM	BHP	RPM	BHP	RPM	BHP	RPM	BHP	RPM	BHP	RPM	BHP
	Field Supplied Drive						Standard Drive Option										High Static Drive			
1200	714	0.41	805	0.48	892	0.56	975	0.64	1055	0.73	1132	0.82	1207	0.92	1278	1.02	1347	1.12	1414	1.22
1400	749	0.47	840	0.53	927	0.62	1010	0.70	1090	0.79	1167	0.88	1242	0.98	1313	1.07	1382	1.18	1449	1.29
1600	789	0.56	880	0.63	967	0.70	1050	0.79	1130	0.88	1207	0.97	1282	1.06	1353	1.17	1422	1.26	1489	1.37
1800	833	0.69	924	0.77	1011	0.84	1094	0.93	1174	1.01	1251	1.11	1326	1.20	1397	1.30	1466	1.40	1533	1.51
2000	881	0.86	971	0.94	1058	1.01	1142	1.10	1222	1.19	1299	1.28	1373	1.37	1445	1.48	1514	1.58	1580	1.68
2200	932	1.08	1022	1.16	1109	1.23	1193	1.32	1273	1.40	1350	1.50	1424	1.59	1496	1.69	1565	1.79	1631	1.90
2400	986	1.34	1076	1.41	1163	1.49	1246	1.57	1327	1.66	1404	1.75	1478	1.85	1550	1.95	1619	2.05	1685	2.15
2600	1042	1.64	1132	1.71	1219	1.78	1303	1.87	1383	1.95	1460	2.05	1534	2.14	1606	2.25	1675	2.34	FS4-	

1. Blower performance includes 1” filters. See STATIC RESISTANCE table for additional applications.
2. See RPM SELECTION table to determine desired motor sheave setting and to determine the maximum continuous BHP.
3. kW = BHP x 0.932.

XN036 - 060 (3-5 Ton Direct Drive) Bottom Duct

UNIT TONNAGE	MOTOR[1] SPEED	AVAILABLE EXTERNAL STATIC PRESSURE - IWG[2]																	
		0.2		0.3		0.4		0.5		0.6		0.7		0.8		0.9		1.0	
		CFM	WATTS	CFM	WATTS	CFM	WATTS	CFM	WATTS	CFM	WATTS	CFM	WATTS	CFM	WATTS	CFM	WATTS	CFM	WATTS
3[3]	5 (HI)	1476	320	1435	335	1396	349	1361	363	1324	376	1289	390	1249	403	1212	417	1172	430
	4 (MED/HI)	1388	263	1344	276	1303	290	1264	303	1222	316	1179	329	1134	343	1082	358	1013	374
	3 (MED)	1250	208	1206	221	1164	234	1121	246	1076	258	1029	272	968	288	903	303	863	313
	2 (MED/LOW)	1151	171	1105	183	1060	195	1010	207	958	220	895	235	-	-	-	-	-	-
	1 (LOW)	1009	130	932	134	874	145	-	-	-	-	-	-	-	-	-	-	-	-
4[3]	5 (HI)	1975	636	1937	696	1900	714	1866	734	1831	749	1791	764	1743	769	1660	743	1520	685
	4 (MED/HI)	1793	539	1759	557	1724	571	1685	585	1654	602	1613	619	1572	638	1520	657	1449	676
	3 (MED)	1614	408	1577	426	1532	438	1497	455	1458	472	1412	490	1360	505	1317	521	1285	536
	2 (MED/LOW)	1450	321	1384	335	1338	352	1311	362	1274	376	1226	393	1177	411	1144	422	1098	437
	1 (LOW)	1250	223	1210	237	1156	247	-	-	-	-	-	-	-	-	-	-	-	-
5[3]	5 (HI)	2166	883	2169	931	2158	950	2134	964	2095	979	2040	971	1963	940	1881	898	1791	854
	4 (MED/HI)	2060	771	2042	784	2035	808	2006	826	1970	844	1934	859	1888	861	1821	843	1730	806
	3 (MED)	1940	637	1920	656	1907	675	1870	696	1834	715	1802	730	1759	740	1722	756	1657	748
	2 (MED/LOW)	1830	413	1759	432	1724	451	1685	468	1654	479	1613	497	1572	513	-	-	-	-
	1 (LOW)	1250	327	1210	339	-	-												

1. Factory set on medium speed tap.
2. Includes allowances for a wet evaporator coil and 1” filters. Refer to STATIC RESISTANCES Table for resistance values.
3. Bottom Duct application (230 Volts)

Belt Drive RPM Selection

Size (Tons)	Model	HP	Max BHP	Motor Sheave	Blower Sheave	5 Turns Open	4 Turns Open	3 Turns Open	2 Turns Open	1 Turn Open	Fully Closed
036 (3)	ZE	1.5	1.73	1VL44	AK64	816	877	933	994	1049	1110
		1.5	1.73	1VP56	AK66	1131	1186	1242	1298	1354	1409
048 (4)	ZE	1.5	1.73	1VL44	AK56	943	1009	1075	1146	1212	1278
		1.5	1.73	1VP56	AK61	1227	1288	1349	1409	1475	1536
060 (5)	ZE	1.5	1.73	1VL44	AK56	943	1009	1075	1146	1212	1278
		2	2.3	1VP56	AK56	1343	1414	1480	1546	1612	1683
072 (6)	ZE	1.5	1.73	1VL44	AK56	930	995	1060	1130	1195	1260
		3	3.45	1VP56	AK56	1325	1395	1460	1525	1590	1660
036 (3)	XN	1.5	1.73	1VL44	AK64	816	877	933	994	1049	1110
		1.5	1.73	1VP56	AK66	1131	1186	1242	1298	1354	1409
048 (4)	XN	1.5	1.73	1VL44	AK56	943	1009	1075	1146	1212	1278
		1.5	1.73	1VP56	AK61	1227	1288	1349	1409	1475	1536
060 (5)	XN	1.5	1.73	1VL44	AK56	943	1009	1075	1146	1212	1278
		2	2.3	1VP56	AK56	1343	1414	1480	1546	1612	1683

Additional Static Resistance

Size (Tons)	CFM	Cooling Only	Economizer[1 2]	Electric Heat kW[1]	
				7 - 15	20 - 30
036 (3.0) 048 (4.0) 060 (5.0) 072 (6.0)	1000	0.08	0.07	0.04	0.06
	1200	0.10	0.08	0.05	0.07
	1400	0.12	0.09	0.06	0.08
	1600	0.14	0.11	0.07	0.09
	1800	0.16	0.13	0.08	0.11
	2000	0.18	0.15	0.10	0.13
	2200	0.20	0.17	0.12	0.15
	2400	0.23	0.20	0.14	0.17
	2600	0.26	0.23	0.16	0.20
	2800	0.29	0.26	0.19	0.23
	3000	0.32	0.30	0.22	0.26

1. Deduct these values from the available external static pressure shown in the respective Blower Performance Tables.
2. The pressure drop through the economizer is greater for 100% outdoor air than for 100% return air. If the resistance of the return air duct is less than 0.25 IWG, the unit will deliver less CFM during full economizer operation.

Drive Selection

1. Determine side or bottom supply air duct application.
2. Determine desired airflow.
3. Calculate or measure the amount of external static pressure.
4. Using the operating point determined from steps 1, 2 & 3, locate this point on the appropriate supply air blower performance table. (Linear interpolation may be necessary.)
5. Noting the RPM and BHP from step 4, locate the appropriate motor and/or drive on the RPM selection table.
6. Review the BHP compared to the motor options available. Select the appropriate motor and/or drive.
7. Review the RPM range for the motor options available. Select the appropriate drive if multiple drives are available for the chosen motor.
8. Determine turns open to obtain the desired operation point.

Example

1. 2200 CFM
2. 1.6 iwg
3. Using the supply air blower performance table below, the following data point was located: 1478 RPM & 1.82 BHP.
4. Using the RPM selection table below, Size X and Model Y is found.
5. 1.82 BHP exceeds the maximum continuous BHP rating of the 1.5 HP motor. The 2 HP motor is required.
6. 1478 RPM is within the range of the 2 HP drive.
7. Using the 2 HP motor and drive, 2.5 turns open will achieve 1478 RPM.

Example Supply Air Blower Performance

Air Flow (CFM)	Available External Static Pressure - IWG																			
	0.2		0.4		0.6		0.8		1.0		1.2		1.4		1.6		1.8		2.0	
	RPM	BHP	RPM	BHP	RPM	BHP	RPM	BHP	RPM	BHP	RPM	BHP	RPM	BHP	RPM	BHP	RPM	BHP	RPM	BHP
	Field Supplied Drive		Standard Drive Option										HIgh Static Drive Option							
2000	907	1.00	990	1.07	1070	1.15	1146	1.23	1220	1.31	1291	1.40	1359	1.49	1425	1.58	1488	1.68	1550	1.77
2200	960	1.24	1043	1.31	1123	1.39	1199	1.47	1273	1.55	1344	1.64	1412	1.73	1478	1.82	1541	1.92	1602	2.01
2400	1015	1.51	1099	1.59	1178	1.66	1255	1.74	1329	1.83	1400	1.92	1468	2.01	1534	2.10	1597	2.19	1658	2.29
2600	1074	1.83	1157	1.90	1237	1.98	1314	2.06	1387	2.14	1458	2.23	-	-	-	-	-	-	-	-

Table X: RPM Selection

Size (Tons)	Model	HP	Max BHP	Motor Sheave	Blower Sheave	5 Turns Open	4 Turns Open	3 Turns Open	2 Turns Open	1 Turn Open	Fully Closed
X	Y	1.5	1.73	1VL44	AK56	930	995	1060	1130	1195	1260
		2	2.3	1VP56	AK56	1325	1395	1460	1525	1590	1660

Altitude/Temperature Correction Factors

Air Temp.	Altitude (Ft.)										
	0	1000	2000	3000	4000	5000	6000	7000	8000	9000	10000
40	1.060	1.022	0.986	0.950	0.916	0.882	0.849	0.818	0.788	0.758	0.729
50	1.039	1.002	0.966	0.931	0.898	0.864	0.832	0.802	0.772	0.743	0.715
60	1.019	0.982	0.948	0.913	0.880	0.848	0.816	0.787	0.757	0.729	0.701
70	1.000	0.964	0.930	0.896	0.864	0.832	0.801	0.772	0.743	0.715	0.688
80	0.982	0.947	0.913	0.880	0.848	0.817	0.787	0.758	0.730	0.702	0.676
90	0.964	0.929	0.897	0.864	0.833	0.802	0.772	0.744	0.716	0.689	0.663
100	0.946	0.912	0.880	0.848	0.817	0.787	0.758	0.730	0.703	0.676	0.651

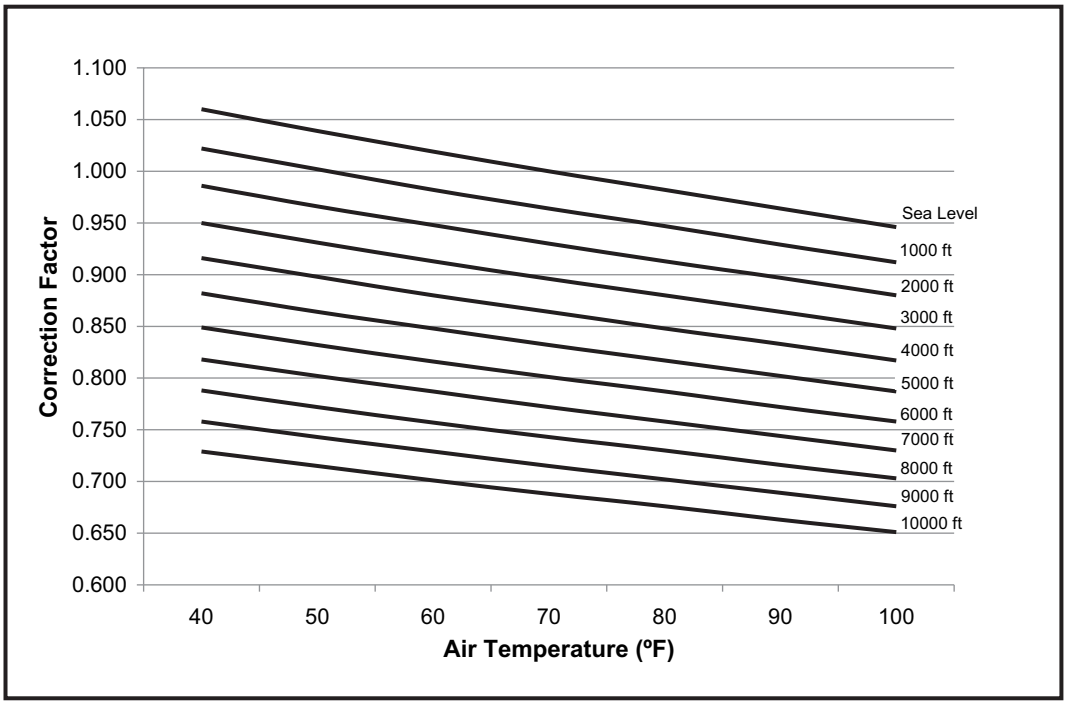

Electric Heat Minimum Supply Air

Size (Tons)	Voltage	Minimum Supply Air (CFM) Heater kW					
		5	7	10	15	20	30
036 (3.0)	208/230-1-60	900	900	900	900	900	-
	208/230-3-60	900	900	900	900	900	-
	460-3-60	-	900	900	900	900	-
	600-3-60	-	-	900	900	900	-
048 (4.0)	208/230-1-60	1200	1200	1200	1200	1200	-
	208/230-3-60	1200	1200	1200	1200	1200	-
	460-3-60	-	1200	1200	1200	1200	-
	600-3-60	-	-	1200	1200	1200	-
060 (5.0)	208/230-1-60	1500	1500	1500	1500	1500	1500
	208/230-3-60	1500	1500	1500	1500	1500	1500
	460-3-60	-	1500	1500	1500	1500	1500
	600-3-60	-	-	1500	1500	1500	1500
072 (6.0)	208/230-3-60	1500	1500	1500	1500	1500	1500
	460-3-60	-	1500	1500	1500	1500	1500
	600-3-60	-	-	1500	1500	1500	1500

Indoor Blower Specifications (Belt Drive)

Size (Tons)	Motor					Motor Sheave			Blower Sheave			Belt
	HP	RPM	Eff.	SF	Frame	Datum Dia. (in.)	Bore (in.)	Model	Datum Dia. (in.)	Bore (in.)	Model	
036	1-1/2	1725	0.8	1.15	56	2.8 - 3.8	7/8	1VL44	6.0	1	AK64	A37
(3.0)	1-1/2	1725	0.8	1.15	56	4.0 - 5.0	7/8	1VP56	6.2	1	AK66	A39
048	1-1/2	1725	0.8	1.15	56	2.8 - 3.8	7/8	1VL44	5.2	1	AK56	A36
(4.0)	1-1/2	1725	0.8	1.15	56	4.0 - 5.0	7/8	1VP56	5.7	1	AK61	A38
060	1-1/2	1725	0.8	1.15	56	2.8 - 3.8	7/8	1VL44	5.2	1	AK56	A36
(5.0)	2	1725	0.8	1.15	56	4.0 - 5.0	7/8	1VP56	5.2	1	AK56	A38
072	1-1/2	1725	0.8	1.15	56	2.8 - 3.8	7/8	1VL44	5.2	1	AK56	A36
(6.0)	3	1725	0.8	1.15	56	4.0 - 5.0	7/8	1VP56	5.2	1	AK56	A38

Power Exhaust Specifications

Model	Voltage	Motor			Motor			Fuse Size	CFM @ 0.1 ESP
		HP	RPM	QTY	LRA	FLA	MCA		
2PE04703725	208/230-1-60	1/2	1725[1]	1	23.7	4.4	5.5	8	1350
2PE04703746	460-1-60	1/2	1725[1]	1	4.1	1.7	2.1	5	1350
2PE04703758	575-3-60	1/2	1725	1	4.5	0.9	1.1	2	1350

1. Motors are multi-tapped and factory wired for high speed.

Electric Heat Multipliers

Voltage		kW Capacity Multipliers[1]
Nominal	Applied	
240	208	0.75
	230	0.92
480	460	0.92
600	575	0.92

1. Electric heaters are rated at nominal voltage. Use this table to determine the electric heat capacity for heaters applied at lower voltages.

Sound Performance

ZE Outdoor Sound Power Levels

Size (Tons)	Sound Rating[1] dB (A)	Octave Band Centerline Frequency (Hz)							
		63	125	250	500	1000	2000	4000	8000
036 (3.0)	81	87.5	86.0	81.0	77.0	75.0	69.5	65.5	70.5
048 (4.0)	80	84.5	81.0	80.0	78.0	75.0	70.0	67.0	70.5
060 (5.0)	82	86.5	87.5	81.5	77.5	75.0	71.5	68.0	70.5
072 (6.0)	83	83	85	83	81	78	75	71	64

1. Rated in accordance with AHRI 270 standard.

XN Outdoor Sound Power Levels

Size (Tons)	Sound Rating[1] dB (A)	Octave Band Centerline Frequency (Hz)							
		63	125	250	500	1000	2000	4000	8000
036 (3.0)	76	83.5	84.5	76.5	72.0	68.0	66.0	60.0	56.0
048 (4.0)	80	85.0	83.0	81.0	77.5	75.5	71.5	67.5	61.5
060 (5.0)	80	86.0	84.0	81.0	77.0	75.5	71.0	66.5	60.5

1. Rated in accordance with AHRI 270 standard.

Electrical Data

Without Powered Convenience Outlet

ZE036-072 (Belt Drive)

Size (Tons)	Volt	Compressors (each)			OD Fan Motors (each)	Supply Blower Motor	Pwr Conv Outlet	Electric Heat Option				MCA[1] (Amps)	Max Fuse[2]/ Breaker[3] Size (Amps)
		RLA	LRA	MCC	FLA	FLA	FLA	Model	kW	Stages	Amps		
036 (3.0)	208-1-60 [4]	15.4	83.9	24	2.3	6.7	0	NONE	-	-	-	28.3	35
								E05	4	1	19.2	32.4	40
								E07	5.6	1	26.9	42	45
								E10	8	1	38.5	56.5	60
								E15	11.9	2	57.2	79.9	80
								E20	15.9	2	76.4	103.9	110
	230-1-60 [4]	15.4	83.9	24	2.3	6.7	0	NONE	-	-	-	28.3	35
								E05	5.3	1	22.1	36	40
								E07	7.5	1	31.2	47.4	50
								E10	10.6	1	44.2	63.6	70
								E15	15.9	2	66.2	91.2	100
								E20	21.2	2	88.3	118.8	125
	208-3-60	10.4	73	16.3	2.3	4.3	0	NONE	-	-	-	19.6	25
								E05	4	1	11.1	19.6	25
								E07	5.6	1	15.5	24.8	30
								E10	8	1	22.2	33.1	35
								E15	11.9	2	33	46.7	50
								E20	15.9	2	44.1	60.5	70
	230-3-60	10.4	73	16.3	2.3	4.3	0	NONE	-	-	-	19.6	25
								E05	5.3	1	12.7	21.3	30
								E07	7.5	1	18	27.9	30
								E10	10.6	1	25.5	37.2	40
								E15	15.9	2	38.2	53.2	60
								E20	21.2	2	51	69.1	70
	460-3-60	5.8	38	9	1.3	2.1	0	NONE	-	-	-	10.6	15
								E07	6.8	1	8.2	12.8	15
								E10	10.1	1	12.1	17.8	20
								E15	13.6	2	16.4	23.1	25
								E20	19.5	2	23.5	31.9	35
	575-3-60	4.2	36.5	5.9	1.3	1.9	0	NONE	-	-	-	8.2	15
								E10	10.6	1	10.2	15.1	20
								E15	15.9	2	15.3	21.5	25
								E20	21.2	2	20.4	27.9	30
048 (4.0)	208-1-60[4]	19.6	130	30.5	2.3	6.7	0	NONE	-	-	-	33.5	45
								E05	4	1	19.2	33.5	45
								E07	5.6	1	26.9	42	50
								E10	8	1	38.5	56.5	60
								E15	11.9	2	57.2	79.9	80
								E20	15.9	2	76.4	103.9	110
	230-1-60[4]	19.6	130	30.5	2.3	6.7	0	NONE	-	-	-	33.5	45
								E05	5.3	1	22.1	36	45
								E07	7.5	1	31.2	47.4	50
								E10	10.6	1	44.2	63.6	70
								E15	15.9	2	66.2	91.2	100
								E20	21.2	2	88.3	118.8	125
	208-3-60	13.7	83.1	21.4	2.3	4.3	0	NONE	-	-	-	23.7	30
								E05	4	1	11.1	23.7	30
								E07	5.6	1	15.5	24.8	30
								E10	8	1	22.2	33.1	35
								E15	11.9	2	33	46.7	50
								E20	15.9	2	44.1	60.5	70
	230-3-60	13.7	83.1	21.4	2.3	4.3	0	NONE	-	-	-	23.7	30
								E05	5.3	1	12.7	23.7	30
								E07	7.5	1	18	27.9	35
								E10	10.6	1	25.5	37.2	40
								E15	15.9	2	38.2	53.2	60
								E20	21.2	2	51	69.1	70
	460-3-60	6.2	41	9.7	1.3	2.1	0	NONE	-	-	-	11.1	15
								E07	6.8	1	8.2	12.8	15
								E10	10.1	1	12.1	17.8	20
								E15	13.6	2	16.4	23.1	25
								E20	19.5	2	23.5	31.9	35
	575-3-60	4.8	33	7.5	1.3	1.9	0	NONE	-	-	-	8.9	15
								E10	10.6	1	10.2	15.1	20
								E15	15.9	2	15.3	21.5	25
								E20	21.2	2	20.4	27.9	30

ZE036-072 (Belt Drive) (Continued)

Size (Tons)	Volt	Compressors (each)			OD Fan Motors (each)	Supply Blower Motor	Pwr Conv Outlet	Electric Heat Option				MCA[1] (Amps)	Max Fuse[2]/ Breaker[3] Size (Amps)
		RLA	LRA	MCC	FLA	FLA	FLA	Model	kW	Stages	Amps		
060 (5.0)	208-1-60[4]	24.4	144.2	38	4.4	6.7	0	NONE	-	-	-	41.6	50
								E05	4	1	19.2	41.6	50
								E07	5.6	1	26.9	42	60
								E10	8	1	38.5	56.5	60
								E15	11.9	2	57.2	79.9	80
								E20	15.9	2	76.4	103.9	110
								E30	22.2	2	106.7	141.8	150
	230-1-60[4]	24.4	144.2	38	4.4	6.7	0	NONE	-	-	-	41.6	50
								E05	5.3	1	22.1	41.6	50
								E07	7.5	1	31.2	47.4	60
								E10	10.6	1	44.2	63.6	70
								E15	15.9	2	66.2	91.2	100
								E20	21.2	2	88.3	118.8	125
								E30	29.6	2	123.3	162.5	175
	208-3-60	16	110	24.9	4.4	4.3	0	NONE	-	-	-	28.7	35
								E05	4	1	11.1	28.7	35
								E07	5.6	1	15.5	28.7	35
								E10	8	1	22.2	33.1	40
								E15	11.9	2	33	46.7	50
								E20	15.9	2	44.1	60.5	70
								E30	22.2	2	61.6	82.4	90
	230-3-60	16	110	24.9	4.4	4.3	0	NONE	-	-	-	28.7	35
								E05	5.3	1	12.7	28.7	35
								E07	7.5	1	18	28.7	35
								E10	10.6	1	25.5	37.2	40
								E15	15.9	2	38.2	53.2	60
								E20	21.2	2	51	69.1	70
								E30	29.6	2	71.2	94.4	100
	460-3-60	7.8	52	12.1	4.4	2.1	0	NONE	-	-	-	14.1	20
								E07	6.8	1	8.2	14.1	20
								E10	10.1	1	12.1	17.8	20
								E15	13.6	2	16.4	23.1	25
								E20	19.5	2	23.5	31.9	35
								E30	28.8	2	34.6	45.9	50
	575-3-60	5.7	38.9	8.9	4.4	1.9	0	NONE	-	-	-	10.8	15
								E10	10.6	1	10.2	15.1	20
								E15	15.9	2	15.3	21.5	25
								E20	21.2	2	20.4	27.9	30
								E30	30.4	2	29.3	38.9	40
072 (6.0)	208-3-60	19.6	136	27	4.4	4.3		None	-	-	-	33.2	45
								E05	4	1	11.1	33.2	45
								E07	5.6	1	15.5	33.2	45
								E10	8	1	22.2	33.2	45
								E15	11.9	1	33	46.6	50
								E20	15.9	2	44.1	60.5	70
								E30	22.2	2	61.6	82.4	90
	230-3-60	19.6	136	27	4.4	4.3		None	-	-	-	33.2	45
								E05	5.3	1	12.7	33.2	45
								E07	7.5	1	18	33.2	45
								E10	10.6	1	25.5	37.3	50
								E15	15.9	1	38.2	53.1	60
								E20	21.2	2	51	69.1	70
								E30	29.6	2	71.2	94.4	100
	460-3-60	9.4	66.1	13	2.4	2.1		None	-	-	-	16.3	25
								E07	6.8	1	8.2	16.3	25
								E10	10.1	1	12.1	17.8	25
								E15	13.6	1	16.4	23.1	25
								E20	19.5	2	23.5	32	35
								E30	28.8	2	34.6	45.9	50
	575-3-60	7.1	55.3	10	4.4	1.9		None	-	-	-	12.6	15
								E10	10.6	1	10.2	15.1	20
								E15	15.9	1	15.3	21.5	25
								E20	21.2	2	20.4	27.9	30
								E30	30.4	2	29.3	39	40

1. Minimum Circuit Ampacity.
2. Dual Element, Time Delay Type.
3. HACR type per NEC.
4. Electrical data for single phase gas heating units with belt drive is at the end of the electrical data section.

ZE036-072 (Belt Drive High Static)

Size (Tons)	Volt	Compressors (each)			OD Fan Motors (each)	Supply Blower Motor	Pwr Conv Outlet	Electric Heat Option				MCA[1] (Amps)	Max Fuse[2]/ Breaker[3] Size (Amps)
		RLA	LRA	MCC	FLA	FLA	FLA	Model	kW	Stages	Amps		
036 (3.0)	208-1-60 [4]	15.4	83.9	24	2.3	6.7	0	NONE	-	-	-	28.3	35
								E05	4	1	19.2	32.4	40
								E07	5.6	1	26.9	42	45
								E10	8	1	38.5	56.5	60
								E15	11.9	2	57.2	79.9	80
								E20	15.9	2	76.4	103.9	110
	230-1-60 [4]	15.4	83.9	24	2.3	6.7	0	NONE	-	-	-	28.3	35
								E05	5.3	1	22.1	36	40
								E07	7.5	1	31.2	47.4	50
								E10	10.6	1	44.2	63.6	70
								E15	15.9	2	66.2	91.2	100
								E20	21.2	2	88.3	118.8	125
	208-3-60	10.4	73	16.3	2.3	4.3	0	NONE	-	-	-	19.6	25
								E05	4	1	11.1	19.6	25
								E07	5.6	1	15.5	24.8	30
								E10	8	1	22.2	33.1	35
								E15	11.9	2	33	46.7	50
								E20	15.9	2	44.1	60.5	70
	230-3-60	10.4	73	16.3	2.3	4.3	0	NONE	-	-	-	19.6	25
								E05	5.3	1	12.7	21.3	30
								E07	7.5	1	18	27.9	30
								E10	10.6	1	25.5	37.2	40
								E15	15.9	2	38.2	53.2	60
								E20	21.2	2	51	69.1	70
	460-3-60	5.8	38	9	1.3	2.1	0	NONE	-	-	-	10.6	15
								E07	6.8	1	8.2	12.8	15
								E10	10.1	1	12.1	17.8	20
								E15	13.6	2	16.4	23.1	25
								E20	19.5	2	23.5	31.9	35
	575-3-60	4.2	36.5	5.9	1.3	1.9	0	NONE	-	-	-	8.2	15
								E10	10.6	1	10.2	15.1	20
								E15	15.9	2	15.3	21.5	25
								E20	21.2	2	20.4	27.9	30
048 (4.0)	208-1-60[4]	19.6	130	30.5	2.3	6.7	0	NONE	-	-	-	33.5	45
								E05	4	1	19.2	33.5	45
								E07	5.6	1	26.9	42	50
								E10	8	1	38.5	56.5	60
								E15	11.9	2	57.2	79.9	80
								E20	15.9	2	76.4	103.9	110
	230-1-60[4]	19.6	130	30.5	2.3	6.7	0	NONE	-	-	-	33.5	45
								E05	5.3	1	22.1	36	45
								E07	7.5	1	31.2	47.4	50
								E10	10.6	1	44.2	63.6	70
								E15	15.9	2	66.2	91.2	100
								E20	21.2	2	88.3	118.8	125
	208-3-60	13.7	83.1	21.4	2.3	4.3	0	NONE	-	-	-	23.7	30
								E05	4	1	11.1	23.7	30
								E07	5.6	1	15.5	24.8	30
								E10	8	1	22.2	33.1	35
								E15	11.9	2	33	46.7	50
								E20	15.9	2	44.1	60.5	70
	230-3-60	13.7	83.1	21.4	2.3	4.3	0	NONE	-	-	-	23.7	30
								E05	5.3	1	12.7	23.7	30
								E07	7.5	1	18	27.9	35
								E10	10.6	1	25.5	37.2	40
								E15	15.9	2	38.2	53.2	60
								E20	21.2	2	51	69.1	70
	460-3-60	6.2	41	9.7	1.3	2.1	0	NONE	-	-	-	11.1	15
								E07	6.8	1	8.2	12.8	15
								E10	10.1	1	12.1	17.8	20
								E15	13.6	2	16.4	23.1	25
								E20	19.5	2	23.5	31.9	35
	575-3-60	4.8	33	7.5	1.3	1.9	0	NONE	-	-	-	8.9	15
								E10	10.6	1	10.2	15.1	20
								E15	15.9	2	15.3	21.5	25
								E20	21.2	2	20.4	27.9	30

ZE036-072 (Belt Drive High Static) (Continued)

Size (Tons)	Volt	Compressors (each)			OD Fan Motors (each)	Supply Blower Motor	Pwr Conv Outlet	Electric Heat Option				MCA[1] (Amps)	Max Fuse[2]/ Breaker[3] Size (Amps)
		RLA	LRA	MCC	FLA	FLA	FLA	Model	kW	Stages	Amps		
060 (5.0)	208-3-60	16	110	24.9	4.4	6.8	0	NONE	-	-	-	31.2	40
								E05	4	1	11.1	31.2	40
								E07	5.6	1	15.5	31.2	40
								E10	8	1	22.2	36.3	45
								E15	11.9	2	33	49.8	50
								E20	15.9	2	44.1	63.7	70
								E30	22.2	2	61.6	85.5	90
	230-3-60	16	110	24.9	4.4	6.8	0	NONE	-	-	-	31.2	40
								E05	5.3	1	12.7	31.2	40
								E07	7.5	1	18	31.2	40
								E10	10.6	1	25.5	40.4	45
								E15	15.9	2	38.2	56.3	60
								E20	21.2	2	51	72.2	80
								E30	29.6	2	71.2	97.5	100
	460-3-60	7.8	52	12.1	4.4	3.15	0	NONE	-	-	-	15.1	20
								E07	6.8	1	8.2	15.1	20
								E10	10.1	1	12.1	19.1	20
								E15	13.6	2	16.4	24.4	25
								E20	19.5	2	23.5	33.3	35
								E30	28.8	2	34.6	47.2	50
	575-3-60	5.7	38.9	8.9	4.4	2.2	0	NONE	-	-	-	11.1	15
								E10	10.6	1	10.2	15.5	20
								E15	15.9	2	15.3	21.9	25
								E20	21.2	2	20.4	28.2	30
								E30	30.4	2	29.3	39.3	40
072 (6.0)	208-3-60	19.6	136	27	4.4	8.3		None	-	-	-	37.2	50
								E05	4	1	11.1	37.2	50
								E07	5.6	1	15.5	37.2	50
								E10	8	1	22.2	38.1	50
								E15	11.9	1	33	51.6	60
								E20	15.9	2	44.1	65.5	70
								E30	22.2	2	61.6	87.4	90
	230-3-60	19.6	136	27	4.4	8.3		None	-	-	-	37.2	50
								E05	5.3	1	12.7	37.2	50
								E07	7.5	1	18	37.2	50
								E10	10.6	1	25.5	42.3	50
								E15	15.9	1	38.2	58.1	60
								E20	21.2	2	51	74.1	80
								E30	29.6	2	71.2	99.4	100
	460-3-60	9.4	66.1	13	2.4	4.1		None	-	-	-	18.3	25
								E07	6.8	1	8.2	18.3	25
								E10	10.1	1	12.1	20.3	25
								E15	13.6	1	16.4	25.6	30
								E20	19.5	2	23.5	34.5	35
								E30	28.8	2	34.6	48.4	50
	575-3-60	7.1	55.3	10	4.4	3.2		None	-	-	-	13.9	20
								E10	10.6	1	10.2	16.8	20
								E15	15.9	1	15.3	23.1	25
								E20	21.2	2	20.4	29.5	30
								E30	30.4	2	29.3	40.6	45

1. Minimum Circuit Ampacity.
2. Dual Element, Time Delay Type.
3. HACR type per NEC.
4. Single phase, high static belt drive motors not available on gas heating units.

ZE036-060 (Direct Drive)

Size (Tons)	Volt	Compressors (each)			OD Fan Motors (each)	Supply Blower Motor	Pwr Conv Outlet	Electric Heat Option				MCA[1] (Amps)	Max Fuse[2]/ Breaker[3] Size (Amps)
		RLA	LRA	MCC	FLA	FLA	FLA	Model	kW	Stages	Amps		
036 (3.0)	208-1-60	15.4	83.9	24	2.3	6	0	NONE	-	-	-	27.5	35
								E05	4	1	19.2	31.5	40
								E07	5.6	1	26.9	41.2	45
								E10	8	1	38.5	55.6	60
								E15	11.9	2	57.2	79	80
								E20	15.9	2	76.4	103.1	110
	230-1-60	15.4	83.9	24	2.3	6	0	NONE	-	-	-	27.5	35
								E05	5.3	1	22.1	35.1	40
								E07	7.5	1	31.2	46.6	50
								E10	10.6	1	44.2	62.7	70
								E15	15.9	2	66.2	90.3	100
								E20	21.2	2	88.3	117.9	125
	208-3-60	10.4	73	16.3	2.3	6	0	NONE	-	-	-	21.3	30
								E05	4	1	11.1	21.4	30
								E07	5.6	1	15.5	26.9	30
								E10	8	1	22.2	35.3	40
								E15	11.9	2	33	48.8	50
								E20	15.9	2	44.1	62.7	70
	230-3-60	10.4	73	16.3	2.3	6	0	NONE	-	-	-	21.3	30
								E05	5.3	1	12.7	23.4	30
								E07	7.5	1	18	30.1	35
								E10	10.6	1	25.5	39.4	40
								E15	15.9	2	38.2	55.3	60
								E20	21.2	2	51	71.2	80
048 (4.0)	208-1-60	19.6	130	30.5	2.3	7.6	0	NONE	-	-	-	34.4	45
								E05	4	1	19.2	34.4	45
								E07	5.6	1	26.9	43.2	50
								E10	8	1	38.5	57.6	60
								E15	11.9	2	57.2	81	90
								E20	15.9	2	76.4	105.1	110
	230-1-60	19.6	130	30.5	2.3	7.6	0	NONE	-	-	-	34.4	45
								E05	5.3	1	22.1	37.1	45
								E07	7.5	1	31.2	48.6	50
								E10	10.6	1	44.2	64.7	70
								E15	15.9	2	66.2	92.3	100
								E20	21.2	2	88.3	119.9	125
	208-3-60	13.7	83.1	21.4	2.3	7.6	0	NONE	-	-	-	27	35
								E05	4	1	11.1	27	35
								E07	5.6	1	15.5	28.9	35
								E10	8	1	22.2	37.3	40
								E15	11.9	2	33	50.8	60
								E20	15.9	2	44.1	64.7	70
	230-3-60	13.7	83.1	21.4	2.3	7.6	0	NONE	-	-	-	27	35
								E05	5.3	1	12.7	27	35
								E07	7.5	1	18	32.1	40
								E10	10.6	1	25.5	41.4	45
								E15	15.9	2	38.2	57.3	60
								E20	21.2	2	51	73.2	80

ZE036-060 (Direct Drive) (Continued)

Size (Tons)	Volt	Compressors (each)			OD Fan Motors (each)	Supply Blower Motor	Pwr Conv Outlet	Electric Heat Option				MCA[1] (Amps)	Max Fuse[2]/ Breaker[3] Size (Amps)
		RLA	LRA	MCC	FLA	FLA	FLA	Model	kW	Stages	Amps		
060 (5.0)	208-1-60	24.4	144.2	38	4.4	7.6	0	NONE	-	-	-	42.5	60
								E05	4	1	19.2	42.5	60
								E07	5.6	1	26.9	43.2	60
								E10	8	1	38.5	57.6	60
								E15	11.9	2	57.2	81	90
								E20	15.9	2	76.4	105.1	110
								E30	22.2	2	106.7	142.9	150
	230-1-60	24.4	144.2	38	4.4	7.6	0	NONE	-	-	-	42.5	60
								E05	5.3	1	22.1	42.5	60
								E07	7.5	1	31.2	48.6	60
								E10	10.6	1	44.2	64.7	70
								E15	15.9	2	66.2	92.3	100
								E20	21.2	2	88.3	119.9	125
								E30	29.6	2	123.3	163.7	175
	208-3-60	16	110	24.9	4.4	7.6	0	NONE	-	-	-	32	40
								E05	4	1	11.1	32	40
								E07	5.6	1	15.5	32	40
								E10	8	1	22.2	37.3	45
								E15	11.9	2	33	50.8	60
								E20	15.9	2	44.1	64.7	70
								E30	22.2	2	61.6	86.5	90
	230-3-60	16	110	24.9	4.4	7.6	0	NONE	-	-	-	32	40
								E05	5.3	1	12.7	32	40
								E07	7.5	1	18	32.1	40
								E10	10.6	1	25.5	41.4	45
								E15	15.9	2	38.2	57.3	60
								E20	21.2	2	51	73.2	80
								E30	29.6	2	71.2	98.5	100

1. Minimum Circuit Ampacity.
2. Dual Element, Time Delay Type.
3. HACR type per NEC.

XN036-060 (Belt Drive)

Size (Tons)	Volt	Compressors (each)			OD Fan Motors (each)	Supply Blower Motor	Pwr Conv Outlet	Electric Heat Option				MCA[1] (Amps)	Max Fuse[2]/ Breaker[3] Size (Amps)
		RLA	LRA	MCC	FLA	FLA	FLA	Model	kW	Stages	Amps		
036 (3.0)	208-1-60	16.7	109	26	1.3	6.7	0	NONE	-	-	-	28.9	35
								E05	4	1	19.2	52.9	60
								E07	5.6	1	26.9	62.5	70
								E10	8	1	38.5	77	80
								E15	11.9	2	57.2	100.4	110
								E20	15.9	2	76.4	124.4	125
	230-1-60	16.7	109	26	1.3	6.7	0	NONE	-	-	-	28.9	35
								E05	5.3	1	22.1	56.5	60
								E07	7.5	1	31.2	67.9	70
								E10	10.6	1	44.2	84.1	90
								E15	15.9	2	66.2	111.7	125
								E20	21.2	2	88.3	139.3	150
	208-3-60	11.2	88	17.5	1.3	4.3	0	NONE	-	-	-	19.6	25
								E05	4	1	11.1	33.5	40
								E07	5.6	1	15.5	39	45
								E10	8	1	22.2	47.4	50
								E15	11.9	2	33	60.9	70
								E20	15.9	2	44.1	74.8	80
	230-3-60	11.2	88	17.5	1.3	4.3	0	NONE	-	-	-	19.6	25
								E05	5.3	1	12.7	35.5	40
								E07	7.5	1	18	42.2	45
								E10	10.6	1	25.5	51.5	60
								E15	15.9	2	38.2	67.4	70
								E20	21.2	2	51	83.3	90
	460-3-60	5.5	43.2	7.7	0.8	2.1	0	NONE	-	-	-	9.8	15
								E07	6.8	1	8.2	20	20
								E10	10.1	1	12.1	25	25
								E15	13.6	2	16.4	30.2	35
								E20	19.5	2	23.5	39.1	40
	575-3-60	3.8	34	6	0.8	1.9	0	NONE	-	-	-	7.3	15
								E10	10.6	1	10.2	20	25
								E15	15.9	2	15.3	26.4	30
								E20	21.2	2	20.4	32.8	35

XN036-060 (Belt Drive) (Continued)

Size (Tons)	Volt	Compressors (each)			OD Fan Motors (each)	Supply Blower Motor	Pwr Conv Outlet	Electric Heat Option				MCA[1] (Amps)	Max Fuse[2]/ Breaker[3] Size (Amps)
		RLA	LRA	MCC	FLA	FLA	FLA	Model	kW	Stages	Amps		
048 (4.0)	208-1-60	19.6	130	30.5	2.8	6.7	0	NONE	-	-	-	34	45
								E05	4	1	19.2	58	70
								E07	5.6	1	26.9	67.7	80
								E10	8	1	38.5	82.1	90
								E15	11.9	2	57.2	105.5	110
								E20	15.9	2	76.4	129.6	150
	230-1-60	19.6	130	30.5	2.8	6.7	0	NONE	-	-	-	34	45
								E05	5.3	1	22.1	61.6	70
								E07	7.5	1	31.2	73.1	80
								E10	10.6	1	44.2	89.2	90
								E15	15.9	2	66.2	116.8	125
								E20	21.2	2	88.3	144.4	150
	208-3-60	13.7	83.1	21.4	2.8	4.3	0	NONE	-	-	-	24.2	30
								E05	4	1	11.1	38.1	45
								E07	5.6	1	15.5	43.7	50
								E10	8	1	22.2	52	60
								E15	11.9	2	33	65.5	70
								E20	15.9	2	44.1	79.4	80
	230-3-60	13.7	83.1	21.4	2.8	4.3	0	NONE	-	-	-	24.2	30
								E05	5.3	1	12.7	40.2	50
								E07	7.5	1	18	46.8	50
								E10	10.6	1	25.5	56.1	60
								E15	15.9	2	38.2	72	80
								E20	21.2	2	51	88	90
	460-3-60	6.2	41	9.7	2.8	2.1	0	NONE	-	-	-	11.3	15
								E07	6.8	1	8.2	21.5	25
								E10	10.1	1	12.1	26.4	30
								E15	13.6	2	16.4	31.7	35
								E20	19.5	2	23.5	40.6	45
	575-3-60	4.8	33	7.5	2.8	1.9	0	NONE	-	-	-	9	15
								E10	10.6	1	10.2	21.8	25
								E15	15.9	2	15.3	28.1	30
								E20	21.2	2	20.4	34.5	35

XN036-060 (Belt Drive) (Continued)

Size (Tons)	Volt	Compressors (each)			OD Fan Motors (each)	Supply Blower Motor	Pwr Conv Outlet	Electric Heat Option				MCA[1] (Amps)	Max Fuse[2]/ Breaker[3] Size (Amps)
		RLA	LRA	MCC	FLA	FLA	FLA	Model	kW	Stages	Amps		
060 (5.0)	208-1-60	27.1	152.9	42.3	2.8	4.3	0	NONE	-	-	-	41	50
								E05	4	1	19.2	65	80
								E07	5.6	1	26.9	74.6	90
								E10	8	1	38.5	89.1	100
								E15	11.9	2	57.2	112.5	125
								E20	15.9	2	76.4	136.5	150
								E30	22.2	2	106.7	174.4	175
	230-1-60	27.1	152.9	42.3	2.8	4.3	0	NONE	-	-	-	41	50
								E05	5.3	1	22.1	68.6	90
								E07	7.5	1	31.2	80	90
								E10	10.6	1	44.2	96.2	110
								E15	15.9	2	66.2	123.8	125
								E20	21.2	2	88.3	151.4	175
								E30	29.6	2	123.3	195.1	200
	208-3-60	16.5	110	25.8	2.8	4.3	0	NONE	-	-	-	27.7	35
								E05	4	1	11.1	41.6	50
								E07	5.6	1	15.5	47.2	50
								E10	8	1	22.2	55.5	60
								E15	11.9	2	33	69	70
								E20	15.9	2	44.1	82.9	90
								E30	22.2	2	61.6	104.8	110
	230-3-60	16.5	110	25.8	2.8	4.3	0	NONE	-	-	-	27.7	35
								E05	5.3	1	12.7	43.7	50
								E07	7.5	1	18	50.3	60
								E10	10.6	1	25.5	59.6	60
								E15	15.9	2	38.2	75.5	80
								E20	21.2	2	51	91.5	100
								E30	29.6	2	71.2	116.7	125
	460-3-60	7.2	52	11.3	2.8	2.1	0	NONE	-	-	-	12.5	15
								E07	6.8	1	8.2	22.7	25
								E10	10.1	1	12.1	27.7	30
								E15	13.6	2	16.4	32.9	35
								E20	19.5	2	23.5	41.8	45
								E30	28.8	2	34.6	55.8	60
	575-3-60	5.5	38.9	8.6	2.8	1.9	0	NONE	-	-	-	9.9	15
								E10	10.6	1	10.2	22.6	25
								E15	15.9	2	15.3	29	30
								E20	21.2	2	20.4	35.4	40
								E30	30.4	2	29.3	46.5	50

1. Minimum Circuit Ampacity.
2. Dual Element, Time Delay Type.
3. HACR type per NEC.

XN036-060 (Belt Drive High Static)

Size (Tons)	Volt	Compressors (each)			OD Fan Motors (each)	Supply Blower Motor	Pwr Conv Outlet	Electric Heat Option				MCA[1] (Amps)	Max Fuse[2]/ Breaker[3] Size (Amps)
		RLA	LRA	MCC	FLA	FLA	FLA	Model	kW	Stages	Amps		
036 (3.0)	208-1-60	16.7	109	26	1.3	6.7	0	NONE	-	-	-	28.9	35
								E05	4	1	19.2	52.9	60
								E07	5.6	1	26.9	62.5	70
								E10	8	1	38.5	77	80
								E15	11.9	2	57.2	100.4	110
								E20	15.9	2	76.4	124.4	125
	230-1-60	16.7	109	26	1.3	6.7	0	NONE	-	-	-	28.9	35
								E05	5.3	1	22.1	56.5	60
								E07	7.5	1	31.2	67.9	70
								E10	10.6	1	44.2	84.1	90
								E15	15.9	2	66.2	111.7	125
								E20	21.2	2	88.3	139.3	150
	208-3-60	11.2	88	17.5	1.3	4.3	0	NONE	-	-	-	19.6	25
								E05	4	1	11.1	33.5	40
								E07	5.6	1	15.5	39	45
								E10	8	1	22.2	47.4	50
								E15	11.9	2	33	60.9	70
								E20	15.9	2	44.1	74.8	80
	230-3-60	11.2	88	17.5	1.3	4.3	0	NONE	-	-	-	19.6	25
								E05	5.3	1	12.7	35.5	40
								E07	7.5	1	18	42.2	45
								E10	10.6	1	25.5	51.5	60
								E15	15.9	2	38.2	67.4	70
								E20	21.2	2	51	83.3	90
	460-3-60	5.5	43.2	7.7	0.8	2.1	0	NONE	-	-	-	9.8	15
								E07	6.8	1	8.2	20	20
								E10	10.1	1	12.1	25	25
								E15	13.6	2	16.4	30.2	35
								E20	19.5	2	23.5	39.1	40
	575-3-60	3.8	34	6	0.8	1.9	0	NONE	-	-	-	7.3	15
								E10	10.6	1	10.2	20	25
								E15	15.9	2	15.3	26.4	30
								E20	21.2	2	20.4	32.8	35

XN036-060 (Belt Drive High Static) (Continued)

Size (Tons)	Volt	Compressors (each)			OD Fan Motors (each)	Supply Blower Motor	Pwr Conv Outlet	Electric Heat Option				MCA[1] (Amps)	Max Fuse[2]/ Breaker[3] Size (Amps)
		RLA	LRA	MCC	FLA	FLA	FLA	Model	kW	Stages	Amps		
048 (4.0)	208-1-60	19.6	130	30.5	2.8	6.7	0	NONE	-	-	-	34	45
								E05	4	1	19.2	58	70
								E07	5.6	1	26.9	67.7	80
								E10	8	1	38.5	82.1	90
								E15	11.9	2	57.2	105.5	110
								E20	15.9	2	76.4	129.6	150
	230-1-60	19.6	130	30.5	2.8	6.7	0	NONE	-	-	-	34	45
								E05	5.3	1	22.1	61.6	70
								E07	7.5	1	31.2	73.1	80
								E10	10.6	1	44.2	89.2	90
								E15	15.9	2	66.2	116.8	125
								E20	21.2	2	88.3	144.4	150
	208-3-60	13.7	83.1	21.4	2.8	4.3	0	NONE	-	-	-	24.2	30
								E05	4	1	11.1	38.1	45
								E07	5.6	1	15.5	43.7	50
								E10	8	1	22.2	52	60
								E15	11.9	2	33	65.5	70
								E20	15.9	2	44.1	79.4	80
	230-3-60	13.7	83.1	21.4	2.8	4.3	0	NONE	-	-	-	24.2	30
								E05	5.3	1	12.7	40.2	50
								E07	7.5	1	18	46.8	50
								E10	10.6	1	25.5	56.1	60
								E15	15.9	2	38.2	72	80
								E20	21.2	2	51	88	90
	460-3-60	6.2	41	9.7	2.8	2.1	0	NONE	-	-	-	11.3	15
								E07	6.8	1	8.2	21.5	25
								E10	10.1	1	12.1	26.4	30
								E15	13.6	2	16.4	31.7	35
								E20	19.5	2	23.5	40.6	45
	575-3-60	4.8	33	7.5	2.8	1.9	0	NONE	-	-	-	9	15
								E10	10.6	1	10.2	21.8	25
								E15	15.9	2	15.3	28.1	30
								E20	21.2	2	20.4	34.5	35
060 (5.0)	208-3-60	16.5	110	25.8	2.8	6.8	0	NONE	-	-	-	30.2	40
								E05	4	1	11.1	44.1	50
								E07	5.6	1	15.5	49.7	60
								E10	8	1	22.2	58	60
								E15	11.9	2	33	71.5	80
								E20	15.9	2	44.1	85.4	90
								E30	22.2	2	61.6	107.3	110
	230-3-60	16.5	110	25.8	2.8	6.8	0	NONE	-	-	-	30.2	40
								E05	5.3	1	12.7	46.2	50
								E07	7.5	1	18	52.8	60
								E10	10.6	1	25.5	62.1	70
								E15	15.9	2	38.2	78	80
								E20	21.2	2	51	94	100
								E30	29.6	2	71.2	119.2	125
	460-3-60	7.2	52	11.3	2.8	3.15	0	NONE	-	-	-	13.6	20
								E07	6.8	1	8.2	23.8	25
								E10	10.1	1	12.1	28.7	30
								E15	13.6	2	16.4	34	35
								E20	19.5	2	23.5	42.9	45
								E30	28.8	2	34.6	56.9	60
	575-3-60	5.5	38.9	8.6	2.8	2.2	0	NONE	-	-	-	10.2	15
								E10	10.6	1	10.2	22.9	25
								E15	15.9	2	15.3	29.3	30
								E20	21.2	2	20.4	35.7	40
								E30	30.4	2	29.3	46.8	50

1. Minimum Circuit Ampacity.
2. Dual Element, Time Delay Type.
3. HACR type per NEC.

XN036-060 (Direct Drive)

Size (Tons)	Volt	Compressors (each)			OD Fan Motors (each)	Supply Blower Motor	Pwr Conv Outlet	Electric Heat Option				MCA[1] (Amps)	Max Fuse[2]/ Breaker[3] Size (Amps)
		RLA	LRA	MCC	FLA	FLA	FLA	Model	kW	Stages	Amps		
036 (3.0)	208-1-60	16.7	109	26	1.3	6	0	NONE	-	-	-	28.2	35
								E05	4	1	19.2	52.2	60
								E07	5.6	1	26.9	61.8	70
								E10	8	1	38.5	76.3	80
								E15	11.9	2	57.2	99.7	100
								E20	15.9	2	76.4	123.7	125
	230-1-60	16.7	109	26	1.3	6	0	NONE	-	-	-	28.2	35
								E05	5.3	1	22.1	55.8	60
								E07	7.5	1	31.2	67.2	70
								E10	10.6	1	44.2	83.4	90
								E15	15.9	2	66.2	111	125
								E20	21.2	2	88.3	138.6	150
	208-3-60	11.2	88	17.5	1.3	6	0	NONE	-	-	-	21.3	30
								E05	4	1	11.1	35.2	40
								E07	5.6	1	15.5	40.7	45
								E10	8	1	22.2	49.1	50
								E15	11.9	2	33	62.6	70
								E20	15.9	2	44.1	76.5	80
	230-3-60	11.2	88	17.5	1.3	6	0	NONE	-	-	-	21.3	30
								E05	5.3	1	12.7	37.2	45
								E07	7.5	1	18	43.9	50
								E10	10.6	1	25.5	53.2	60
								E15	15.9	2	38.2	69.1	70
								E20	21.2	2	51	85	90
048 (4.0)	208-1-60	19.6	130	30.5	2.8	7.6	0	NONE	-	-	-	34.9	45
								E05	4	1	19.2	58.9	70
								E07	5.6	1	26.9	68.6	80
								E10	8	1	38.5	83	90
								E15	11.9	2	57.2	106.4	110
								E20	15.9	2	76.4	130.5	150
	230-1-60	19.6	130	30.5	2.8	7.6	0	NONE	-	-	-	34.9	45
								E05	5.3	1	22.1	62.5	70
								E07	7.5	1	31.2	74	80
								E10	10.6	1	44.2	90.1	100
								E15	15.9	2	66.2	117.7	125
								E20	21.2	2	88.3	145.3	150
	208-3-60	13.7	83.1	21.4	2.8	7.6	0	NONE	-	-	-	27.5	35
								E05	4	1	11.1	41.4	50
								E07	5.6	1	15.5	47	50
								E10	8	1	22.2	55.3	60
								E15	11.9	2	33	68.8	70
								E20	15.9	2	44.1	82.7	90
	230-3-60	13.7	83.1	21.4	2.8	7.6	0	NONE	-	-	-	27.5	35
								E05	5.3	1	12.7	43.5	50
								E07	7.5	1	18	50.1	60
								E10	10.6	1	25.5	59.4	60
								E15	15.9	2	38.2	75.3	80
								E20	21.2	2	51	91.3	100

XN036-060 (Direct Drive) (Continued)

Size (Tons)	Volt	Compressors (each)			OD Fan Motors (each)	Supply Blower Motor	Pwr Conv Outlet	Electric Heat Option				MCA[1] (Amps)	Max Fuse[2]/ Breaker[3] Size (Amps)
		RLA	LRA	MCC	FLA	FLA	FLA	Model	kW	Stages	Amps		
060 (5.0)	208-1-60	27.1	152.9	42.3	2.8	7.6	0	NONE	-	-	-	44.3	60
								E05	4	1	19.2	68.3	90
								E07	5.6	1	26.9	77.9	90
								E10	8	1	38.5	92.4	100
								E15	11.9	2	57.2	115.8	125
								E20	15.9	2	76.4	139.8	150
								E30	22.2	2	106.7	177.7	200
	230-1-60	27.1	152.9	42.3	2.8	7.6	0	NONE	-	-	-	44.3	60
								E05	5.3	1	22.1	71.9	90
								E07	7.5	1	31.2	83.3	100
								E10	10.6	1	44.2	99.5	110
								E15	15.9	2	66.2	127.1	150
								E20	21.2	2	88.3	154.7	175
								E30	29.6	2	123.3	198.4	200
	208-3-60	16.5	110	25.8	2.8	7.6	0	NONE	-	-	-	31	40
								E05	4	1	11.1	44.9	50
								E07	5.6	1	15.5	50.5	60
								E10	8	1	22.2	58.8	60
								E15	11.9	2	33	72.3	80
								E20	15.9	2	44.1	86.2	90
								E30	22.2	2	61.6	108.1	110
	230-3-60	16.5	110	25.8	2.8	7.6	0	NONE	-	-	-	31	40
								E05	5.3	1	12.7	47	60
								E07	7.5	1	18	53.6	60
								E10	10.6	1	25.5	62.9	70
								E15	15.9	2	38.2	78.8	80
								E20	21.2	2	51	94.8	100
								E30	29.6	2	71.2	120	125

1. Minimum Circuit Ampacity.
2. Dual Element, Time Delay Type.
3. HACR type per NEC.

With Powered Convenience Outlet

ZE036-072 (Belt Drive)

Size (Tons)	Volt	Compressors (each)			OD Fan Motors (each)	Supply Blower Motor	Pwr Conv Outlet	Electric Heat Option				MCA[1] (Amps)	Max Fuse[2]/ Breaker[3] Size (Amps)
		RLA	LRA	MCC	FLA	FLA	FLA	Model	kW	Stages	Amps		
036 (3.0)	208-1-60 [4]	15.4	83.9	24	2.3	6.7	10	NONE	-	-	-	38.3	50
								E05	4	1	19.2	44.9	50
								E07	5.6	1	26.9	54.5	60
								E10	8	1	38.5	69	70
								E15	11.9	2	57.2	92.4	100
								E20	15.9	2	76.4	116.4	125
	230-1-60 [4]	15.4	83.9	24	2.3	6.7	10	NONE	-	-	-	38.3	50
								E05	5.3	1	22.1	48.5	50
								E07	7.5	1	31.2	59.9	60
								E10	10.6	1	44.2	76.1	80
								E15	15.9	2	66.2	103.7	110
								E20	21.2	2	88.3	131.3	150
	208-3-60	10.4	73	16.3	2.3	4.3	10	NONE	-	-	-	29.6	40
								E05	4	1	11.1	31.8	40
								E07	5.6	1	15.5	37.3	40
								E10	8	1	22.2	45.6	50
								E15	11.9	2	33	59.2	60
								E20	15.9	2	44.1	73	80
	230-3-60	10.4	73	16.3	2.3	4.3	10	NONE	-	-	-	29.6	40
								E05	5.3	1	12.7	33.8	40
								E07	7.5	1	18	40.4	45
								E10	10.6	1	25.5	49.7	50
								E15	15.9	2	38.2	65.7	70
								E20	21.2	2	51	81.6	90
	460-3-60	5.8	38	9	1.3	2.1	5	NONE	-	-	-	15.6	20
								E07	6.8	1	8.2	19.1	20
								E10	10.1	1	12.1	24.1	25
								E15	13.6	2	16.4	29.3	30
								E20	19.5	2	23.5	38.2	40
	575-3-60	4.2	36.5	5.9	1.3	1.9	4	NONE	-	-	-	12.2	15
								E10	10.6	1	10.2	20.1	25
								E15	15.9	2	15.3	26.5	30
								E20	21.2	2	20.4	32.9	35
048 (4.0)	208-1-60[4]	19.6	130	30.5	2.3	6.7	10	NONE	-	-	-	43.5	60
								E05	4	1	19.2	44.9	60
								E07	5.6	1	26.9	54.5	60
								E10	8	1	38.5	69	70
								E15	11.9	2	57.2	92.4	100
								E20	15.9	2	76.4	116.4	125
	230-1-60[4]	19.6	130	30.5	2.3	6.7	10	NONE	-	-	-	43.5	60
								E05	5.3	1	22.1	48.5	60
								E07	7.5	1	31.2	59.9	60
								E10	10.6	1	44.2	76.1	80
								E15	15.9	2	66.2	103.7	110
								E20	21.2	2	88.3	131.3	150
	208-3-60	13.7	83.1	21.4	2.3	4.3	10	NONE	-	-	-	33.7	45
								E05	4	1	11.1	33.7	45
								E07	5.6	1	15.5	37.3	45
								E10	8	1	22.2	45.6	50
								E15	11.9	2	33	59.2	60
								E20	15.9	2	44.1	73	80
	230-3-60	13.7	83.1	21.4	2.3	4.3	10	NONE	-	-	-	33.7	45
								E05	5.3	1	12.7	33.8	45
								E07	7.5	1	18	40.4	45
								E10	10.6	1	25.5	49.7	50
								E15	15.9	2	38.2	65.7	70
								E20	21.2	2	51	81.6	90
	460-3-60	6.2	41	9.7	1.3	2.1	5	NONE	-	-	-	16.1	20
								E07	6.8	1	8.2	19.1	20
								E10	10.1	1	12.1	24.1	25
								E15	13.6	2	16.4	29.3	30
								E20	19.5	2	23.5	38.2	40
	575-3-60	4.8	33	7.5	1.3	1.9	4	NONE	-	-	-	12.9	15
								E10	10.6	1	10.2	20.1	25
								E15	15.9	2	15.3	26.5	30
								E20	21.2	2	20.4	32.9	35

ZE036-072 (Belt Drive) (Continued)

Size (Tons)	Volt	Compressors (each)			OD Fan Motors (each)	Supply Blower Motor	Pwr Conv Outlet	Electric Heat Option				MCA[1] (Amps)	Max Fuse[2]/ Breaker[3] Size (Amps)
		RLA	LRA	MCC	FLA	FLA	FLA	Model	kW	Stages	Amps		
060 (5.0)	208-1-60[4]	24.4	144.2	38	4.4	6.7	10	NONE	-	-	-	51.6	70
								E05	4	1	19.2	51.6	70
								E07	5.6	1	26.9	54.5	70
								E10	8	1	38.5	69	70
								E15	11.9	2	57.2	92.4	100
								E20	15.9	2	76.4	116.4	125
								E30	22.2	2	106.7	154.3	175
	230-1-60[4]	24.4	144.2	38	4.4	6.7	10	NONE	-	-	-	51.6	70
								E05	5.3	1	22.1	51.6	70
								E07	7.5	1	31.2	59.9	70
								E10	10.6	1	44.2	76.1	80
								E15	15.9	2	66.2	103.7	110
								E20	21.2	2	88.3	131.3	150
								E30	29.6	2	123.3	175	200
	208-3-60	16	110	24.9	4.4	4.3	10	NONE	-	-	-	38.7	50
								E05	4	1	11.1	38.7	50
								E07	5.6	1	15.5	38.7	50
								E10	8	1	22.2	45.6	50
								E15	11.9	2	33	59.2	60
								E20	15.9	2	44.1	73	80
								E30	22.2	2	61.6	94.9	100
	230-3-60	16	110	24.9	4.4	4.3	10	NONE	-	-	-	38.7	50
								E05	5.3	1	12.7	38.7	50
								E07	7.5	1	18	40.4	50
								E10	10.6	1	25.5	49.7	50
								E15	15.9	2	38.2	65.7	70
								E20	21.2	2	51	81.6	90
								E30	29.6	2	71.2	106.9	110
	460-3-60	7.8	52	12.1	4.4	2.1	5	NONE	-	-	-	19	25
								E07	6.8	1	8.2	19.1	25
								E10	10.1	1	12.1	24.1	25
								E15	13.6	2	16.4	29.3	30
								E20	19.5	2	23.5	38.2	40
								E30	28.8	2	34.6	52.2	60
	575-3-60	5.7	38.9	8.9	4.4	1.9	4	NONE	-	-	-	14.8	15
								E10	10.6	1	10.2	20.1	25
								E15	15.9	2	15.3	26.5	30
								E20	21.2	2	20.4	32.9	35
								E30	30.4	2	29.3	43.9	45
072 (6.0)	208-3-60	19.6	136	27	4.4	4.3	20	None	-	-	-	43.2	60
								E05	4	1	11.1	43.2	60
								E07	5.6	1	15.5	43.2	60
								E10	8	1	22.2	45.6	60
								E15	11.9	1	33	59.1	60
								E20	15.9	2	44.1	73	80
								E30	22.2	2	61.6	94.9	100
	230-3-60	19.6	136	27	4.4	4.3	20	None	-	-	-	43.2	60
								E05	5.3	1	12.7	43.2	60
								E07	7.5	1	18	43.2	60
								E10	10.6	1	25.5	49.8	60
								E15	15.9	1	38.2	65.6	70
								E20	21.2	2	51	81.6	90
								E30	29.6	2	71.2	106.9	110
	460-3-60	9.4	66.1	13	2.4	2.1	20	None	-	-	-	21.3	30
								E07	6.8	1	8.2	21.3	30
								E10	10.1	1	12.1	24	30
								E15	13.6	1	16.4	29.4	30
								E20	19.5	2	23.5	38.3	40
								E30	28.8	2	34.6	52.1	60
	575-3-60	7.1	55.3	10	4.4	1.9	20	None	-	-	-	16.6	20
								E10	10.6	1	10.2	20.1	25
								E15	15.9	1	15.3	26.5	30
								E20	21.2	2	20.4	32.9	35
								E30	30.4	2	29.3	44	45

1. Minimum Circuit Ampacity.
2. Dual Element, Time Delay Type.
3. HACR type per NEC.
4. Electrical data for single phase gas heating units with belt drive is at the end of the electrical data section.

ZE036-072 (Belt Drive High Static)

Size (Tons)	Volt	Compressors (each)			OD Fan Motors (each)	Supply Blower Motor	Pwr Conv Outlet	Electric Heat Option				MCA[1] (Amps)	Max Fuse[2]/ Breaker[3] Size (Amps)
		RLA	LRA	MCC	FLA	FLA	FLA	Model	kW	Stages	Amps		
036 (3.0)	208-1-60 [4]	15.4	83.9	24	2.3	6.7	10	NONE	-	-	-	38.3	50
								E05	4	1	19.2	44.9	50
								E07	5.6	1	26.9	54.5	60
								E10	8	1	38.5	69	70
								E15	11.9	2	57.2	92.4	100
								E20	15.9	2	76.4	116.4	125
	230-1-60 [4]	15.4	83.9	24	2.3	6.7	10	NONE	-	-	-	38.3	50
								E05	5.3	1	22.1	48.5	50
								E07	7.5	1	31.2	59.9	60
								E10	10.6	1	44.2	76.1	80
								E15	15.9	2	66.2	103.7	110
								E20	21.2	2	88.3	131.3	150
	208-3-60	10.4	73	16.3	2.3	4.3	10	NONE	-	-	-	29.6	40
								E05	4	1	11.1	31.8	40
								E07	5.6	1	15.5	37.3	40
								E10	8	1	22.2	45.6	50
								E15	11.9	2	33	59.2	60
								E20	15.9	2	44.1	73	80
	230-3-60	10.4	73	16.3	2.3	4.3	10	NONE	-	-	-	29.6	40
								E05	5.3	1	12.7	33.8	40
								E07	7.5	1	18	40.4	45
								E10	10.6	1	25.5	49.7	50
								E15	15.9	2	38.2	65.7	70
								E20	21.2	2	51	81.6	90
	460-3-60	5.8	38	9	1.3	2.1	5	NONE	-	-	-	15.6	20
								E07	6.8	1	8.2	19.1	20
								E10	10.1	1	12.1	24.1	25
								E15	13.6	2	16.4	29.3	30
								E20	19.5	2	23.5	38.2	40
	575-3-60	4.2	36.5	5.9	1.3	1.9	4	NONE	-	-	-	12.2	15
								E10	10.6	1	10.2	20.1	25
								E15	15.9	2	15.3	26.5	30
								E20	21.2	2	20.4	32.9	35
048 (4.0)	208-1-60[4]	19.6	130	30.5	2.3	6.7	10	NONE	-	-	-	43.5	60
								E05	4	1	19.2	44.9	60
								E07	5.6	1	26.9	54.5	60
								E10	8	1	38.5	69	70
								E15	11.9	2	57.2	92.4	100
								E20	15.9	2	76.4	116.4	125
	230-1-60[4]	19.6	130	30.5	2.3	6.7	10	NONE	-	-	-	43.5	60
								E05	5.3	1	22.1	48.5	60
								E07	7.5	1	31.2	59.9	60
								E10	10.6	1	44.2	76.1	80
								E15	15.9	2	66.2	103.7	110
								E20	21.2	2	88.3	131.3	150
	208-3-60	13.7	83.1	21.4	2.3	4.3	10	NONE	-	-	-	33.7	45
								E05	4	1	11.1	33.7	45
								E07	5.6	1	15.5	37.3	45
								E10	8	1	22.2	45.6	50
								E15	11.9	2	33	59.2	60
								E20	15.9	2	44.1	73	80
	230-3-60	13.7	83.1	21.4	2.3	4.3	10	NONE	-	-	-	33.7	45
								E05	5.3	1	12.7	33.8	45
								E07	7.5	1	18	40.4	45
								E10	10.6	1	25.5	49.7	50
								E15	15.9	2	38.2	65.7	70
								E20	21.2	2	51	81.6	90
	460-3-60	6.2	41	9.7	1.3	2.1	5	NONE	-	-	-	16.1	20
								E07	6.8	1	8.2	19.1	20
								E10	10.1	1	12.1	24.1	25
								E15	13.6	2	16.4	29.3	30
								E20	19.5	2	23.5	38.2	40
	575-3-60	4.8	33	7.5	1.3	1.9	4	NONE	-	-	-	12.9	15
								E10	10.6	1	10.2	20.1	25
								E15	15.9	2	15.3	26.5	30
								E20	21.2	2	20.4	32.9	35

ZE036-072 (Belt Drive High Static) (Continued)

Size (Tons)	Volt	Compressors (each)			OD Fan Motors (each)	Supply Blower Motor	Pwr Conv Outlet	Electric Heat Option				MCA[1] (Amps)	Max Fuse[2]/ Breaker[3] Size (Amps)
		RLA	LRA	MCC	FLA	FLA	FLA	Model	kW	Stages	Amps		
060 (5.0)	208-3-60	16	110	24.9	4.4	6.8	10	NONE	-	-	-	41.2	50
								E05	4	1	11.1	41.2	50
								E07	5.6	1	15.5	41.2	50
								E10	8	1	22.2	48.8	50
								E15	11.9	2	33	62.3	70
								E20	15.9	2	44.1	76.2	80
								E30	22.2	2	61.6	98	100
	230-3-60	16	110	24.9	4.4	6.8	10	NONE	-	-	-	41.2	50
								E05	5.3	1	12.7	41.2	50
								E07	7.5	1	18	43.6	50
								E10	10.6	1	25.5	52.9	60
								E15	15.9	2	38.2	68.8	70
								E20	21.2	2	51	84.7	90
								E30	29.6	2	71.2	110	125
	460-3-60	7.8	52	12.1	4.4	3.15	5	NONE	-	-	-	20.1	25
								E07	6.8	1	8.2	20.4	25
								E10	10.1	1	12.1	25.4	30
								E15	13.6	2	16.4	30.6	35
								E20	19.5	2	23.5	39.5	40
								E30	28.8	2	34.6	53.5	60
	575-3-60	5.7	38.9	8.9	4.4	2.2	4	NONE	-	-	-	15.1	20
								E10	10.6	1	10.2	20.5	25
								E15	15.9	2	15.3	26.9	30
								E20	21.2	2	20.4	33.2	35
								E30	30.4	2	29.3	44.3	45
072 (6.0)	208-3-60	19.6	136	27	4.4	8.3	20	None	-	-	-	47.2	60
								E05	4	1	11.1	47.2	60
								E07	5.6	1	15.5	47.2	60
								E10	8	1	22.2	50.6	60
								E15	11.9	1	33	64.1	70
								E20	15.9	2	44.1	78	80
								E30	22.2	2	61.6	99.9	100
	230-3-60	19.6	136	27	4.4	8.3	20	None	-	-	-	47.2	60
								E05	5.3	1	12.7	47.2	60
								E07	7.5	1	18	47.2	60
								E10	10.6	1	25.5	54.8	60
								E15	15.9	1	38.2	70.6	80
								E20	21.2	2	51	86.6	90
								E30	29.6	2	71.2	111.9	125
	460-3-60	9.4	66.1	13	2.4	4.1	20	None	-	-	-	23.3	30
								E07	6.8	1	8.2	23.3	30
								E10	10.1	1	12.1	26.5	30
								E15	13.6	1	16.4	31.9	35
								E20	19.5	2	23.5	40.8	45
								E30	28.8	2	34.6	54.6	60
	575-3-60	7.1	55.3	10	4.4	3.2	20	None	-	-	-	17.9	25
								E10	10.6	1	10.2	21.8	25
								E15	15.9	1	15.3	28.1	30
								E20	21.2	2	20.4	34.5	35
								E30	30.4	2	29.3	45.6	50

1. Minimum Circuit Ampacity.
2. Dual Element, Time Delay Type.
3. HACR type per NEC.
4. Single phase, high static belt drive motors not available on gas heating units.

ZE036-060 (Direct Drive)

Size (Tons)	Volt	Compressors (each)			OD Fan Motors (each)	Supply Blower Motor	Pwr Conv Outlet	Electric Heat Option				MCA[1] (Amps)	Max Fuse[2]/ Breaker[3] Size (Amps)
		RLA	LRA	MCC	FLA	FLA	FLA	Model	kW	Stages	Amps		
036 (3.0)	208-1-60	15.4	83.9	24	2.3	6	10	NONE	-	-	-	37.5	50
								E05	4	1	19.2	44	50
								E07	5.6	1	26.9	53.7	60
								E10	8	1	38.5	68.1	70
								E15	11.9	2	57.2	91.5	100
								E20	15.9	2	76.4	115.6	125
	230-1-60	15.4	83.9	24	2.3	6	10	NONE	-	-	-	37.5	50
								E05	5.3	1	22.1	47.6	50
								E07	7.5	1	31.2	59.1	60
								E10	10.6	1	44.2	75.2	80
								E15	15.9	2	66.2	102.8	110
								E20	21.2	2	88.3	130.4	150
	208-3-60	10.4	73	16.3	2.3	6	10	NONE	-	-	-	31.3	40
								E05	4	1	11.1	33.9	40
								E07	5.6	1	15.5	39.4	40
								E10	8	1	22.2	47.8	50
								E15	11.9	2	33	61.3	70
								E20	15.9	2	44.1	75.2	80
	230-3-60	10.4	73	16.3	2.3	6	10	NONE	-	-	-	31.3	40
								E05	5.3	1	12.7	35.9	40
								E07	7.5	1	18	42.6	45
								E10	10.6	1	25.5	51.9	60
								E15	15.9	2	38.2	67.8	70
								E20	21.2	2	51	83.7	90
048 (4.0)	208-1-60	19.6	130	30.5	2.3	7.6	10	NONE	-	-	-	44.4	60
								E05	4	1	19.2	46	60
								E07	5.6	1	26.9	55.7	60
								E10	8	1	38.5	70.1	80
								E15	11.9	2	57.2	93.5	100
								E20	15.9	2	76.4	117.6	125
	230-1-60	19.6	130	30.5	2.3	7.6	10	NONE	-	-	-	44.4	60
								E05	5.3	1	22.1	49.6	60
								E07	7.5	1	31.2	61.1	70
								E10	10.6	1	44.2	77.2	80
								E15	15.9	2	66.2	104.8	110
								E20	21.2	2	88.3	132.4	150
	208-3-60	13.7	83.1	21.4	2.3	7.6	10	NONE	-	-	-	37	45
								E05	4	1	11.1	37	45
								E07	5.6	1	15.5	41.4	50
								E10	8	1	22.2	49.8	50
								E15	11.9	2	33	63.3	70
								E20	15.9	2	44.1	77.2	80
	230-3-60	13.7	83.1	21.4	2.3	7.6	10	NONE	-	-	-	37	45
								E05	5.3	1	12.7	37.9	50
								E07	7.5	1	18	44.6	50
								E10	10.6	1	25.5	53.9	60
								E15	15.9	2	38.2	69.8	70
								E20	21.2	2	51	85.7	90

ZE036-060 (Direct Drive) (Continued)

Size (Tons)	Volt	Compressors (each)			OD Fan Motors (each)	Supply Blower Motor	Pwr Conv Outlet	Electric Heat Option				MCA[1] (Amps)	Max Fuse[2]/ Breaker[3] Size (Amps)
		RLA	LRA	MCC	FLA	FLA	FLA	Model	kW	Stages	Amps		
060 (5.0)	208-1-60	24.4	144.2	38	4.4	7.6	10	NONE	-	-	-	52.5	70
								E05	4	1	19.2	52.5	70
								E07	5.6	1	26.9	55.7	70
								E10	8	1	38.5	70.1	80
								E15	11.9	2	57.2	93.5	100
								E20	15.9	2	76.4	117.6	125
								E30	22.2	2	106.7	155.4	175
	230-1-60	24.4	144.2	38	4.4	7.6	10	NONE	-	-	-	52.5	70
								E05	5.3	1	22.1	52.5	70
								E07	7.5	1	31.2	61.1	70
								E10	10.6	1	44.2	77.2	80
								E15	15.9	2	66.2	104.8	110
								E20	21.2	2	88.3	132.4	150
								E30	29.6	2	123.3	176.2	200
	208-3-60	16	110	24.9	4.4	7.6	10	NONE	-	-	-	42	50
								E05	4	1	11.1	42	50
								E07	5.6	1	15.5	42	50
								E10	8	1	22.2	49.8	50
								E15	11.9	2	33	63.3	70
								E20	15.9	2	44.1	77.2	80
								E30	22.2	2	61.6	99	100
	230-3-60	16	110	24.9	4.4	7.6	10	NONE	-	-	-	42	50
								E05	5.3	1	12.7	42	50
								E07	7.5	1	18	44.6	50
								E10	10.6	1	25.5	53.9	60
								E15	15.9	2	38.2	69.8	70
								E20	21.2	2	51	85.7	90
								E30	29.6	2	71.2	111	125

1. Minimum Circuit Ampacity.
2. Dual Element, Time Delay Type.
3. HACR type per NEC.

XN036-060 (Belt Drive)

Size (Tons)	Volt	Compressors (each)			OD Fan Motors (each)	Supply Blower Motor	Pwr Conv Outlet	Electric Heat Option				MCA[1] (Amps)	Max Fuse[2]/ Breaker[3] Size (Amps)
		RLA	LRA	MCC	FLA	FLA	FLA	Model	kW	Stages	Amps		
036 (3.0)	208-1-60	16.7	109	26	1.3	6.7	10	NONE	-	-	-	38.9	50
								E05	4	1	19.2	62.9	70
								E07	5.6	1	26.9	72.5	80
								E10	8	1	38.5	87	90
								E15	11.9	2	57.2	110.4	125
								E20	15.9	2	76.4	134.4	150
	230-1-60	16.7	109	26	1.3	6.7	10	NONE	-	-	-	38.9	50
								E05	5.3	1	22.1	66.5	70
								E07	7.5	1	31.2	77.9	80
								E10	10.6	1	44.2	94.1	100
								E15	15.9	2	66.2	121.7	125
								E20	21.2	2	88.3	149.3	150
	208-3-60	11.2	88	17.5	1.3	4.3	10	NONE	-	-	-	29.6	40
								E05	4	1	11.1	43.5	50
								E07	5.6	1	15.5	49	50
								E10	8	1	22.2	57.4	60
								E15	11.9	2	33	70.9	80
								E20	15.9	2	44.1	84.8	90
	230-3-60	11.2	88	17.5	1.3	4.3	10	NONE	-	-	-	29.6	40
								E05	5.3	1	12.7	45.5	50
								E07	7.5	1	18	52.2	60
								E10	10.6	1	25.5	61.5	70
								E15	15.9	2	38.2	77.4	80
								E20	21.2	2	51	93.3	100
	460-3-60	5.5	43.2	7.7	0.8	2.1	5	NONE	-	-	-	14.8	20
								E07	6.8	1	8.2	25	25
								E10	10.1	1	12.1	30	30
								E15	13.6	2	16.4	35.2	40
								E20	19.5	2	23.5	44.1	45
	575-3-60	3.8	34	6	0.8	1.9	4	NONE	-	-	-	11.3	15
								E10	10.6	1	10.2	24.1	25
								E15	15.9	2	15.3	30.5	35
								E20	21.2	2	20.4	36.8	40

XN036-060 (Belt Drive) (Continued)

Size (Tons)	Volt	Compressors (each)			OD Fan Motors (each)	Supply Blower Motor	Pwr Conv Outlet	Electric Heat Option				MCA[1] (Amps)	Max Fuse[2]/ Breaker[3] Size (Amps)
		RLA	LRA	MCC	FLA	FLA	FLA	Model	kW	Stages	Amps		
048 (4.0)	208-1-60	19.6	130	30.5	2.8	6.7	10	NONE	-	-	-	44	60
								E05	4	1	19.2	68	80
								E07	5.6	1	26.9	77.7	90
								E10	8	1	38.5	92.1	100
								E15	11.9	2	57.2	115.5	125
								E20	15.9	2	76.4	139.6	150
	230-1-60	19.6	130	30.5	2.8	6.7	10	NONE	-	-	-	44	60
								E05	5.3	1	22.1	71.6	80
								E07	7.5	1	31.2	83.1	90
								E10	10.6	1	44.2	99.2	100
								E15	15.9	2	66.2	126.8	150
								E20	21.2	2	88.3	154.4	175
	208-3-60	13.7	83.1	21.4	2.8	4.3	10	NONE	-	-	-	34.2	45
								E05	4	1	11.1	48.1	50
								E07	5.6	1	15.5	53.7	60
								E10	8	1	22.2	62	70
								E15	11.9	2	33	75.5	80
								E20	15.9	2	44.1	89.4	90
	230-3-60	13.7	83.1	21.4	2.8	4.3	10	NONE	-	-	-	34.2	45
								E05	5.3	1	12.7	50.2	60
								E07	7.5	1	18	56.8	60
								E10	10.6	1	25.5	66.1	70
								E15	15.9	2	38.2	82	90
								E20	21.2	2	51	98	100
	460-3-60	6.2	41	9.7	2.8	2.1	5	NONE	-	-	-	16.3	20
								E07	6.8	1	8.2	26.5	30
								E10	10.1	1	12.1	31.4	35
								E15	13.6	2	16.4	36.7	40
								E20	19.5	2	23.5	45.6	50
	575-3-60	4.8	33	7.5	2.8	1.9	4	NONE	-	-	-	13	15
								E10	10.6	1	10.2	25.8	30
								E15	15.9	2	15.3	32.1	35
								E20	21.2	2	20.4	38.5	40

XN036-060 (Belt Drive) (Continued)

Size (Tons)	Volt	Compressors (each)			OD Fan Motors (each)	Supply Blower Motor	Pwr Conv Outlet	Electric Heat Option				MCA[1] (Amps)	Max Fuse[2]/ Breaker[3] Size (Amps)
		RLA	LRA	MCC	FLA	FLA	FLA	Model	kW	Stages	Amps		
060 (5.0)	208-1-60	27.1	152.9	42.3	2.8	4.3	10	NONE	-	-	-	51	70
								E05	4	1	19.2	75	90
								E07	5.6	1	26.9	84.6	100
								E10	8	1	38.5	99.1	110
								E15	11.9	2	57.2	122.5	125
								E20	15.9	2	76.4	146.5	150
								E30	22.2	2	106.7	184.4	200
	230-1-60	27.1	152.9	42.3	2.8	4.3	10	NONE	-	-	-	51	70
								E05	5.3	1	22.1	78.6	100
								E07	7.5	1	31.2	90	100
								E10	10.6	1	44.2	106.2	110
								E15	15.9	2	66.2	133.8	150
								E20	21.2	2	88.3	161.4	175
								E30	29.6	2	123.3	205.1	225
	208-3-60	16.5	110	25.8	2.8	4.3	10	NONE	-	-	-	37.7	50
								E05	4	1	11.1	51.6	60
								E07	5.6	1	15.5	57.2	60
								E10	8	1	22.2	65.5	70
								E15	11.9	2	33	79	80
								E20	15.9	2	44.1	92.9	100
								E30	22.2	2	61.6	114.8	125
	230-3-60	16.5	110	25.8	2.8	4.3	10	NONE	-	-	-	37.7	50
								E05	5.3	1	12.7	53.7	60
								E07	7.5	1	18	60.3	70
								E10	10.6	1	25.5	69.6	70
								E15	15.9	2	38.2	85.5	90
								E20	21.2	2	51	101.5	110
								E30	29.6	2	71.2	126.7	150
	460-3-60	7.2	52	11.3	2.8	2.1	5	NONE	-	-	-	17.5	20
								E07	6.8	1	8.2	27.7	30
								E10	10.1	1	12.1	32.7	35
								E15	13.6	2	16.4	37.9	40
								E20	19.5	2	23.5	46.8	50
								E30	28.8	2	34.6	60.8	70
	575-3-60	5.5	38.9	8.6	2.8	1.9	4	NONE	-	-	-	13.9	15
								E10	10.6	1	10.2	26.6	30
								E15	15.9	2	15.3	33	35
								E20	21.2	2	20.4	39.4	40
								E30	30.4	2	29.3	50.5	60

1. Minimum Circuit Ampacity.
2. Dual Element, Time Delay Type.
3. HACR type per NEC.

XN036-060 (Belt Drive High Static)

Size (Tons)	Volt	Compressors (each)			OD Fan Motors (each)	Supply Blower Motor	Pwr Conv Outlet	Electric Heat Option				MCA[1] (Amps)	Max Fuse[2]/ Breaker[3] Size (Amps)
		RLA	LRA	MCC	FLA	FLA	FLA	Model	kW	Stages	Amps		
036 (3.0)	208-1-60	16.7	109	26	1.3	6.7	10	NONE	-	-	-	38.9	50
								E05	4	1	19.2	62.9	70
								E07	5.6	1	26.9	72.5	80
								E10	8	1	38.5	87	90
								E15	11.9	2	57.2	110.4	125
								E20	15.9	2	76.4	134.4	150
	230-1-60	16.7	109	26	1.3	6.7	10	NONE	-	-	-	38.9	50
								E05	5.3	1	22.1	66.5	70
								E07	7.5	1	31.2	77.9	80
								E10	10.6	1	44.2	94.1	100
								E15	15.9	2	66.2	121.7	125
								E20	21.2	2	88.3	149.3	150
	208-3-60	11.2	88	17.5	1.3	4.3	10	NONE	-	-	-	29.6	40
								E05	4	1	11.1	43.5	50
								E07	5.6	1	15.5	49	50
								E10	8	1	22.2	57.4	60
								E15	11.9	2	33	70.9	80
								E20	15.9	2	44.1	84.8	90
	230-3-60	11.2	88	17.5	1.3	4.3	10	NONE	-	-	-	29.6	40
								E05	5.3	1	12.7	45.5	50
								E07	7.5	1	18	52.2	60
								E10	10.6	1	25.5	61.5	70
								E15	15.9	2	38.2	77.4	80
								E20	21.2	2	51	93.3	100
	460-3-60	5.5	43.2	7.7	0.8	2.1	5	NONE	-	-	-	14.8	20
								E07	6.8	1	8.2	25	25
								E10	10.1	1	12.1	30	30
								E15	13.6	2	16.4	35.2	40
								E20	19.5	2	23.5	44.1	45
	575-3-60	3.8	34	6	0.8	1.9	4	NONE	-	-	-	11.3	15
								E10	10.6	1	10.2	24.1	25
								E15	15.9	2	15.3	30.5	35
								E20	21.2	2	20.4	36.8	40

XN036-060 (Belt Drive High Static) (Continued)

Size (Tons)	Volt	Compressors (each)			OD Fan Motors (each)	Supply Blower Motor	Pwr Conv Outlet	Electric Heat Option				MCA[1] (Amps)	Max Fuse[2]/ Breaker[3] Size (Amps)
		RLA	LRA	MCC	FLA	FLA	FLA	Model	kW	Stages	Amps		
048 (4.0)	208-1-60	19.6	130	30.5	2.8	6.7	10	NONE	-	-	-	44	60
								E05	4	1	19.2	68	80
								E07	5.6	1	26.9	77.7	90
								E10	8	1	38.5	92.1	100
								E15	11.9	2	57.2	115.5	125
								E20	15.9	2	76.4	139.6	150
	230-1-60	19.6	130	30.5	2.8	6.7	10	NONE	-	-	-	44	60
								E05	5.3	1	22.1	71.6	80
								E07	7.5	1	31.2	83.1	90
								E10	10.6	1	44.2	99.2	100
								E15	15.9	2	66.2	126.8	150
								E20	21.2	2	88.3	154.4	175
	208-3-60	13.7	83.1	21.4	2.8	4.3	10	NONE	-	-	-	34.2	45
								E05	4	1	11.1	48.1	50
								E07	5.6	1	15.5	53.7	60
								E10	8	1	22.2	62	70
								E15	11.9	2	33	75.5	80
								E20	15.9	2	44.1	89.4	90
	230-3-60	13.7	83.1	21.4	2.8	4.3	10	NONE	-	-	-	34.2	45
								E05	5.3	1	12.7	50.2	60
								E07	7.5	1	18	56.8	60
								E10	10.6	1	25.5	66.1	70
								E15	15.9	2	38.2	82	90
								E20	21.2	2	51	98	100
	460-3-60	6.2	41	9.7	2.8	2.1	5	NONE	-	-	-	16.3	20
								E07	6.8	1	8.2	26.5	30
								E10	10.1	1	12.1	31.4	35
								E15	13.6	2	16.4	36.7	40
								E20	19.5	2	23.5	45.6	50
	575-3-60	4.8	33	7.5	2.8	1.9	4	NONE	-	-	-	13	15
								E10	10.6	1	10.2	25.8	30
								E15	15.9	2	15.3	32.1	35
								E20	21.2	2	20.4	38.5	40
060 (5.0)	208-3-60	16.5	110	25.8	2.8	6.8	10	NONE	-	-	-	40.2	50
								E05	4	1	11.1	54.1	60
								E07	5.6	1	15.5	59.7	70
								E10	8	1	22.2	68	70
								E15	11.9	2	33	81.5	90
								E20	15.9	2	44.1	95.4	100
								E30	22.2	2	61.6	117.3	125
	230-3-60	16.5	110	25.8	2.8	6.8	10	NONE	-	-	-	40.2	50
								E05	5.3	1	12.7	56.2	60
								E07	7.5	1	18	62.8	70
								E10	10.6	1	25.5	72.1	80
								E15	15.9	2	38.2	88	90
								E20	21.2	2	51	104	110
								E30	29.6	2	71.2	129.2	150
	460-3-60	7.2	52	11.3	2.8	3.15	5	NONE	-	-	-	18.5	25
								E07	6.8	1	8.2	28.8	30
								E10	10.1	1	12.1	33.7	35
								E15	13.6	2	16.4	39	40
								E20	19.5	2	23.5	47.9	50
								E30	28.8	2	34.6	61.9	70
	575-3-60	5.5	38.9	8.6	2.8	2.2	4	NONE	-	-	-	14.2	15
								E10	10.6	1	10.2	26.9	30
								E15	15.9	2	15.3	33.3	35
								E20	21.2	2	20.4	39.7	40
								E30	30.4	2	29.3	50.8	60

1. Minimum Circuit Ampacity.
2. Dual Element, Time Delay Type.
3. HACR type per NEC.

XN036-060 (Direct Drive)

Size (Tons)	Volt	Compressors (each)			OD Fan Motors (each)	Supply Blower Motor	Pwr Conv Outlet	Electric Heat Option				MCA[1] (Amps)	Max Fuse[2]/ Breaker[3] Size (Amps)
		RLA	LRA	MCC	FLA	FLA	FLA	Model	kW	Stages	Amps		
036 (3.0)	208-1-60	16.7	109	26	1.3	6	10	NONE	-	-	-	38.2	50
								E05	4	1	19.2	62.2	70
								E07	5.6	1	26.9	71.8	80
								E10	8	1	38.5	86.3	90
								E15	11.9	2	57.2	109.7	110
								E20	15.9	2	76.4	133.7	150
	230-1-60	16.7	109	26	1.3	6	10	NONE	-	-	-	38.2	50
								E05	5.3	1	22.1	65.8	70
								E07	7.5	1	31.2	77.2	80
								E10	10.6	1	44.2	93.4	100
								E15	15.9	2	66.2	121	125
								E20	21.2	2	88.3	148.6	150
	208-3-60	11.2	88	17.5	1.3	6	10	NONE	-	-	-	31.3	40
								E05	4	1	11.1	45.2	50
								E07	5.6	1	15.5	50.7	60
								E10	8	1	22.2	59.1	60
								E15	11.9	2	33	72.6	80
								E20	15.9	2	44.1	86.5	90
	230-3-60	11.2	88	17.5	1.3	6	10	NONE	-	-	-	31.3	40
								E05	5.3	1	12.7	47.2	50
								E07	7.5	1	18	53.9	60
								E10	10.6	1	25.5	63.2	70
								E15	15.9	2	38.2	79.1	80
								E20	21.2	2	51	95	100
048 (4.0)	208-1-60	19.6	130	30.5	2.8	7.6	10	NONE	-	-	-	44.9	60
								E05	4	1	19.2	68.9	80
								E07	5.6	1	26.9	78.6	90
								E10	8	1	38.5	93	100
								E15	11.9	2	57.2	116.4	125
								E20	15.9	2	76.4	140.5	150
	230-1-60	19.6	130	30.5	2.8	7.6	10	NONE	-	-	-	44.9	60
								E05	5.3	1	22.1	72.5	80
								E07	7.5	1	31.2	84	90
								E10	10.6	1	44.2	100.1	110
								E15	15.9	2	66.2	127.7	150
								E20	21.2	2	88.3	155.3	175
	208-3-60	13.7	83.1	21.4	2.8	7.6	10	NONE	-	-	-	37.5	50
								E05	4	1	11.1	51.4	60
								E07	5.6	1	15.5	57	60
								E10	8	1	22.2	65.3	70
								E15	11.9	2	33	78.8	80
								E20	15.9	2	44.1	92.7	100
	230-3-60	13.7	83.1	21.4	2.8	7.6	10	NONE	-	-	-	37.5	50
								E05	5.3	1	12.7	53.5	60
								E07	7.5	1	18	60.1	70
								E10	10.6	1	25.5	69.4	70
								E15	15.9	2	38.2	85.3	90
								E20	21.2	2	51	101.3	110

XN036-060 (Direct Drive) (Continued)

Size (Tons)	Volt	Compressors (each)			OD Fan Motors (each)	Supply Blower Motor	Pwr Conv Outlet	Electric Heat Option				MCA[1] (Amps)	Max Fuse[2]/ Breaker[3] Size (Amps)
		RLA	LRA	MCC	FLA	FLA	FLA	Model	kW	Stages	Amps		
060 (5.0)	208-1-60	27.1	152.9	42.3	2.8	7.6	10	NONE	-	-	-	54.3	70
								E05	4	1	19.2	78.3	100
								E07	5.6	1	26.9	87.9	100
								E10	8	1	38.5	102.4	110
								E15	11.9	2	57.2	125.8	150
								E20	15.9	2	76.4	149.8	150
								E30	22.2	2	106.7	187.7	200
	230-1-60	27.1	152.9	42.3	2.8	7.6	10	NONE	-	-	-	54.3	70
								E05	5.3	1	22.1	81.9	100
								E07	7.5	1	31.2	93.3	110
								E10	10.6	1	44.2	109.5	125
								E15	15.9	2	66.2	137.1	150
								E20	21.2	2	88.3	164.7	175
								E30	29.6	2	123.3	208.4	225
	208-3-60	16.5	110	25.8	2.8	7.6	10	NONE	-	-	-	41	50
								E05	4	1	11.1	54.9	60
								E07	5.6	1	15.5	60.5	70
								E10	8	1	22.2	68.8	70
								E15	11.9	2	33	82.3	90
								E20	15.9	2	44.1	96.2	100
								E30	22.2	2	61.6	118.1	125
	230-3-60	16.5	110	25.8	2.8	7.6	10	NONE	-	-	-	41	50
								E05	5.3	1	12.7	57	70
								E07	7.5	1	18	63.6	70
								E10	10.6	1	25.5	72.9	80
								E15	15.9	2	38.2	88.8	90
								E20	21.2	2	51	104.8	110
								E30	29.6	2	71.2	130	150

1. Minimum Circuit Ampacity.
2. Dual Element, Time Delay Type.
3. HACR type per NEC.

Single-phase gas heat, belt drive

ZE036-060 - Without Powered Convenience Outlet (Belt Drive Single Phase Gas Heat)

Size (Tons)	Volt	Compressors (each)			OD Fan Motors (each)	Supply Blower Motor	Pwr Conv Outlet	Electric Heat Option				MCA[1] (Amps)	Max Fuse[2]/ Breaker[3] Size (Amps)
		RLA	LRA	MCC	FLA	FLA	FLA	Model	kW	Stages	Amps		
036 (3)	208-1-60	15.4	83.9	24	2.3	17.4		None	-	-	-	39.5	50
	230-1-60	15.4	83.9	24	2.3	17.4		None	-	-	-	39.5	50
048 (4)	208-1-60	19.6	130	31	2.3	17.4		None	-	-	-	44.2	60
	230-1-60	19.6	130	31	2.3	17.4		None	-	-	-	44.2	60
060 (5)	208-1-60	24.4	144.2	38	4.4	17.4		None	-	-	-	52.3	70
	230-1-60	24.4	144.2	38	4.4	17.4		None	-	-	-	52.3	70

1. Minimum Circuit Ampacity.
2. Dual Element, Time Delay Type.
3. HACR type per NEC.

ZE036-060 - With Powered Convenience Outlet (Belt Drive Single Phase Gas Heat)

Size (Tons)	Volt	Compressors (each)			OD Fan Motors (each)	Supply Blower Motor	Pwr Conv Outlet	Electric Heat Option				MCA[1] (Amps)	Max Fuse[2]/ Breaker[3] Size (Amps)
		RLA	LRA	MCC	FLA	FLA	FLA	Model	kW	Stages	Amps		
036 (3)	208-1-60	15.4	83.9	24	2.3	17.4	20	None	-	-	-	49.5	60
	230-1-60	15.4	83.9	24	2.3	17.4	20	None	-	-	-	49.5	60
048 (4)	208-1-60	19.6	130	31	2.3	17.4	20	None	-	-	-	54.2	70
	230-1-60	19.6	130	31	2.3	17.4	20	None	-	-	-	54.2	70
060 (5)	208-1-60	24.4	144.2	38	4.4	17.4	20	None	-	-	-	62.3	80
	230-1-60	24.4	144.2	38	4.4	17.4	20	None	-	-	-	62.3	80

1. Minimum Circuit Ampacity.
2. Dual Element, Time Delay Type.
3. HACR type per NEC.

Typical Field Power and Control Wiring

Typical Power Wiring

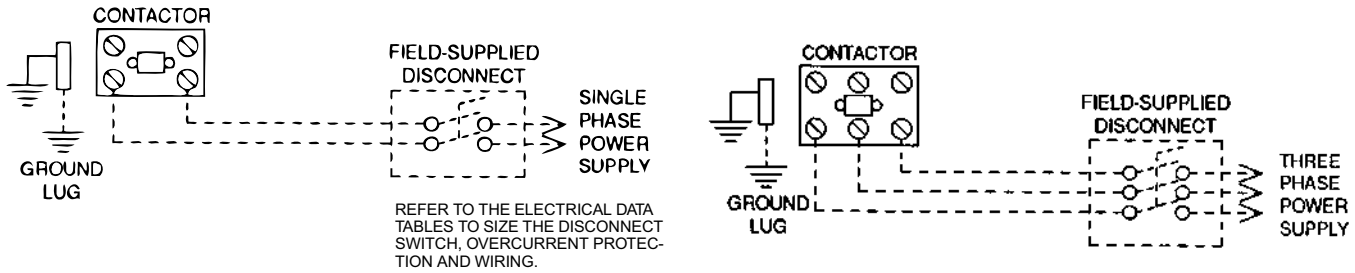

Typical Cool/Heat Control Wiring (Simplicity Lite ZE036-060)

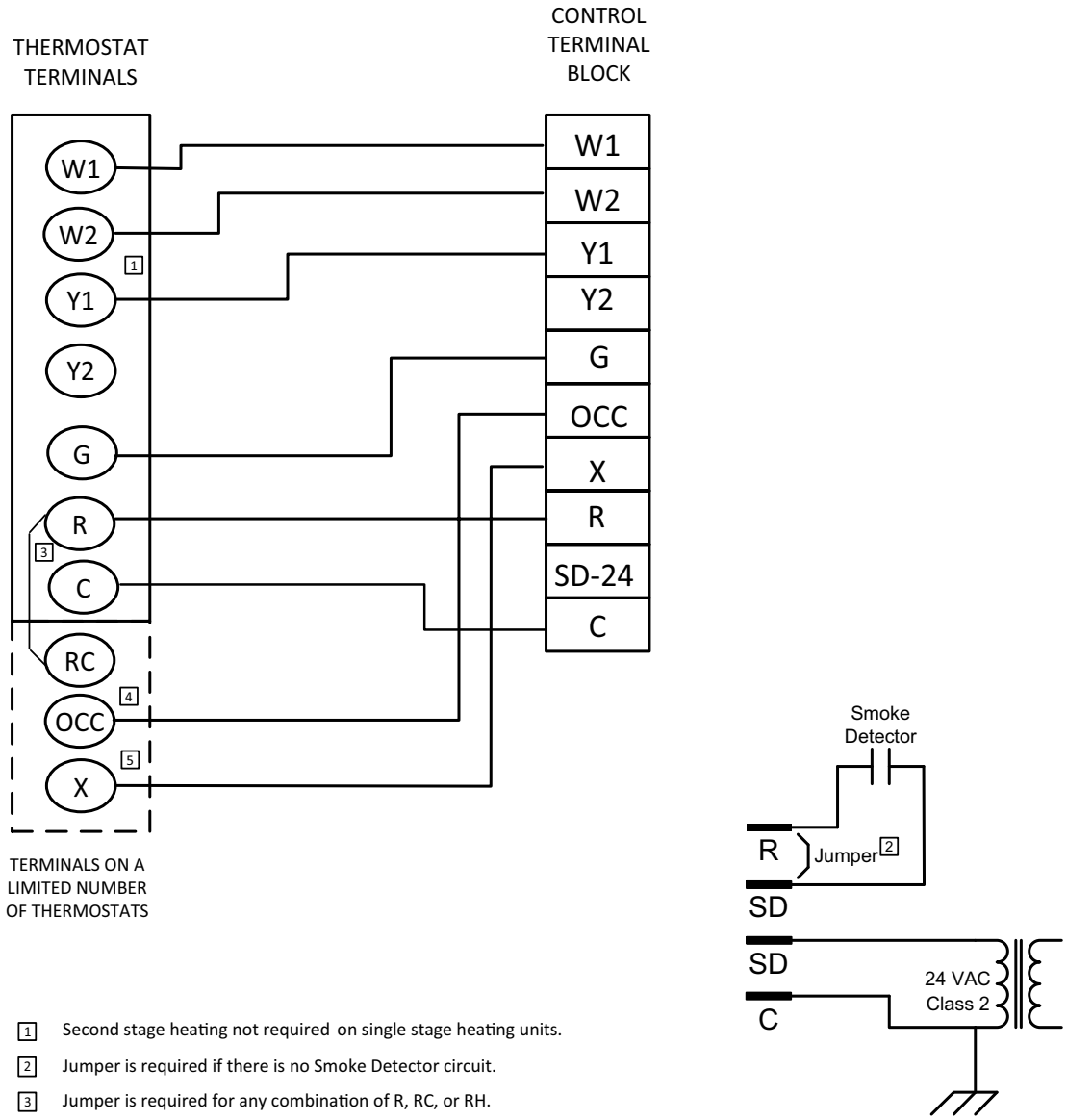

1. Second stage heating not required on single stage heating units.
2. Jumper is required if there is no Smoke Detector circuit.
3. Jumper is required for any combination of R, RC, or RH.
4. OCC is an output from the thermostat to indicate the Occupied condition.
5. X is an input to the thermostat to display Error Status conditions.

Typical Cool/Heat Control Wiring (Smart Equipment™ ZE036-072)

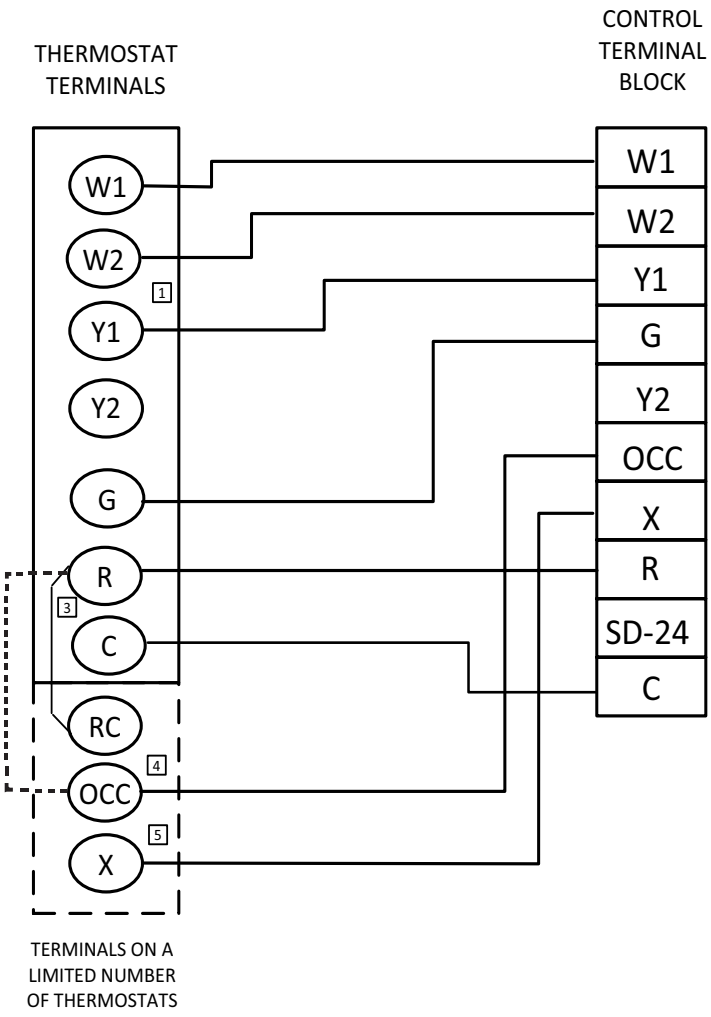

R~Occ Jumper:
Smart Equipment Control boards come from the factory with a jumper wire between R and OCC terminals on the thermostat terminal strip. Failure to remove this jumper will place the unit into the Occupied mode no matter what the occupancy demand is from the thermostat or EMS system. To allow Thermostat or EMS control of the Occupied mode for the unit, this jumper must be removed during commissioning.

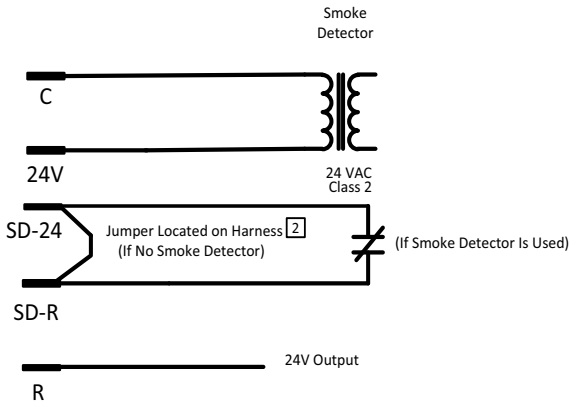

1 Second stage heating not required on single stage heating units.

2 Jumper is required if there is no Smoke Detector circuit.

3 Jumper is required for any combination of R, RC, or RH.

4 OCC is an output from the thermostat to indicate the Occupied condition.

5 X is an input to the thermostat to display Error Status conditions.

Typical Cool/Heat Control Wiring (Smart Equipment™ XN036-060)

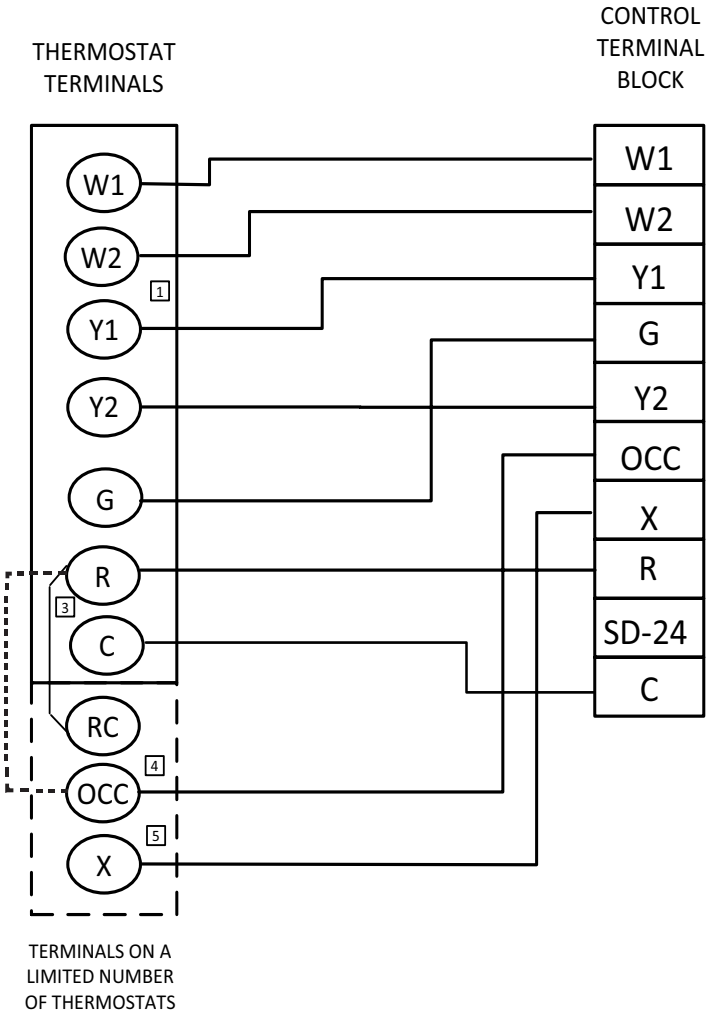

R~Occ Jumper:
Smart Equipment Control boards come from the factory with a jumper wire between R and OCC terminals on the thermostat terminal strip. Failure to remove this jumper will place the unit into the Occupied mode no matter what the occupancy demand is from the thermostat or EMS system. To allow Thermostat or EMS control of the Occupied mode for the unit, this jumper must be removed during commissioning.

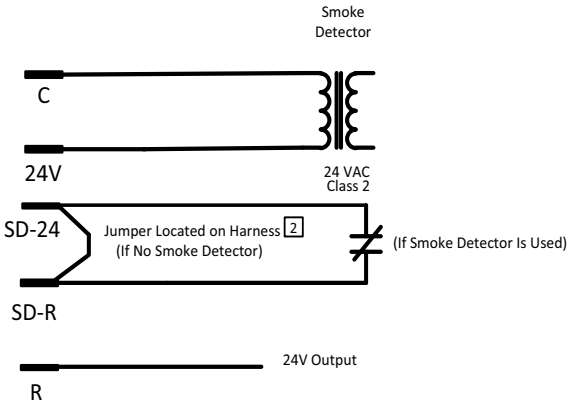

1 Second stage heating not required on single stage heating units.

2 Jumper is required if there is no Smoke Detector circuit.

3 Jumper is required for any combination of R, RC, or RH.

4 OCC is an output from the thermostat to indicate the Occupied condition.

5 X is an input to the thermostat to display Error Status conditions.

Weights and Dimensions

ZE/XN036-072 Unit Weights

Unit 4 Point Load Weight

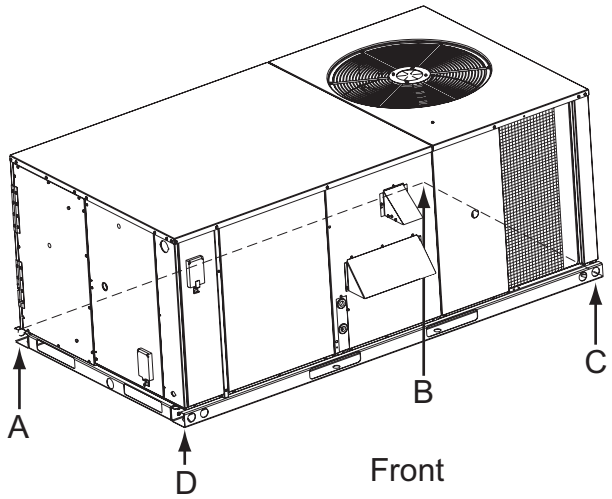

Unit 6 Point Load Weight

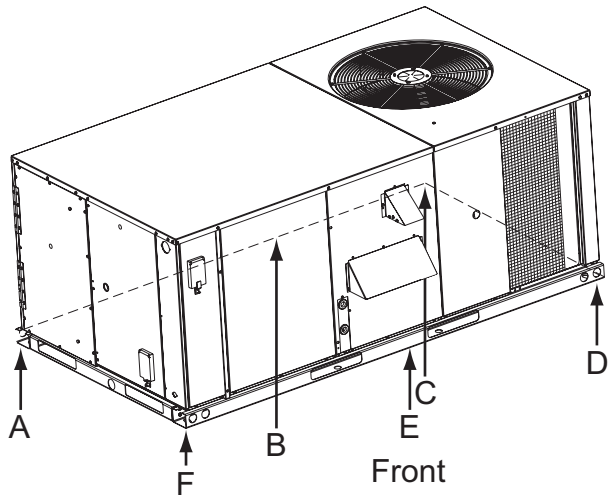

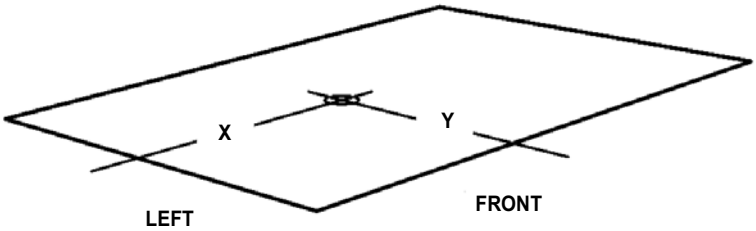

ZE036-072

Size (Tons)	Weight (lbs.)		Center of		4 point Load Location (lbs.)				6 point Load Location (lbs.)					
	Shipping	Operating	X	Y	A	B	C	D	A	B	C	D	E	F
036 (3)	475	470	34.5	18.25	111	80	117	162	78	62	51	74	91	114
048 (4)	603	598	36	18.5	139	108	154	198	96	81	69	98	116	137
060 (5)	637	632	37.5	18.2	139	117	171	204	96	85	76	111	124	140
072 (6)	670	665	35.5	17.75	150	114	173	228	104	86	72	111	132	160

XN036-060

Size (Tons)	Weight (lbs.)		Center of Gravity		4 point Load Location (lbs.)				6 point Load Location (lbs.)					
	Shipping	Operating	X	Y	A	B	C	D	A	B	C	D	E	F
036 (3)	615	610	38.3	18.75	136	119	165	190	93	85	77	108	118	129
048 (4)	621	616	38.2	18.4	135	117	169	195	92	84	76	110	121	133
060 (5)	625	620	38.6	18	132	117	174	197	90	83	76	114	123	134

ZE/XN036-072 Unit Accessory Weights

Unit Accessory	Weight (lbs.)	
	Shipping	Operating
Economizer	55	50
Power Exhaust	55	50
Electric Heat[1]	28	28
Gas Heat[2]	70	70

1. Weight given is for the maximum heater size available (30KW).
2. Weight given is for the maximum number of tube heat exchangers available (5 tube).

ZE/XN036-072 Unit Dimensions

ZE036-072 Cooling Only/Electric Heat Front View
XN036-060 Heat Pump/Electric Heat Front View

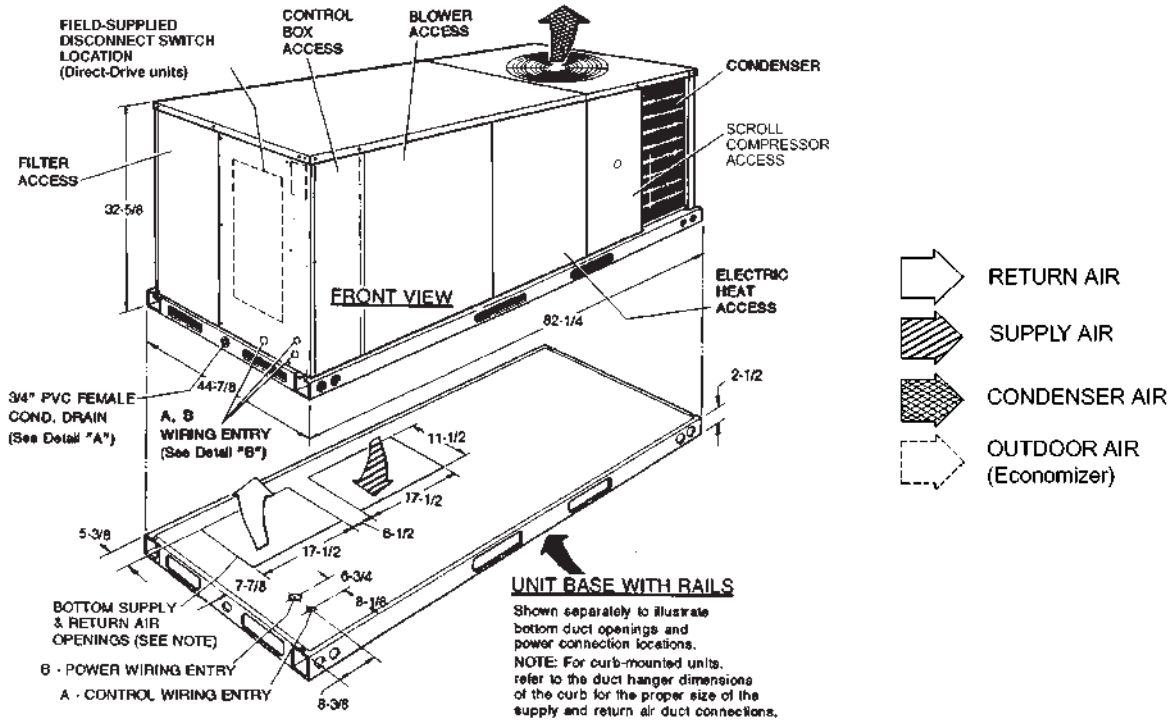

ZE036-072 Cooling Only/Gas Heat Front View

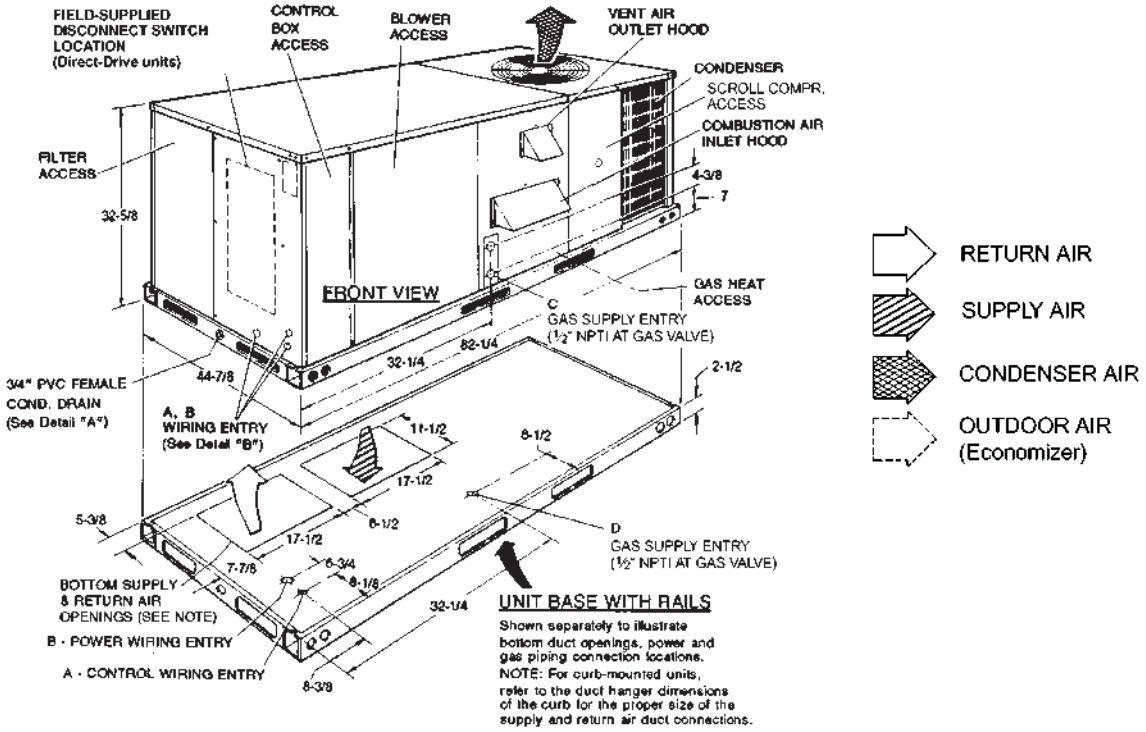

ZE/XN036-072 Fixed Outdoor Air Motorized Damper Rain Hood

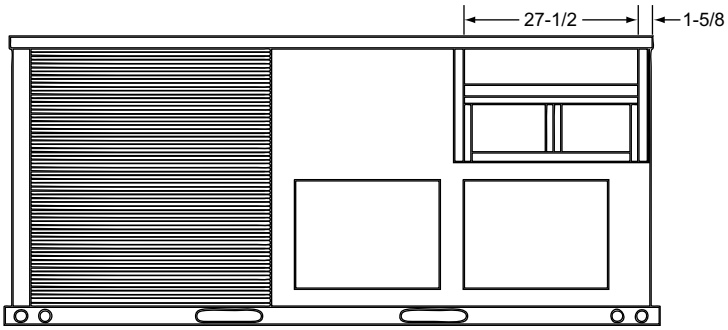

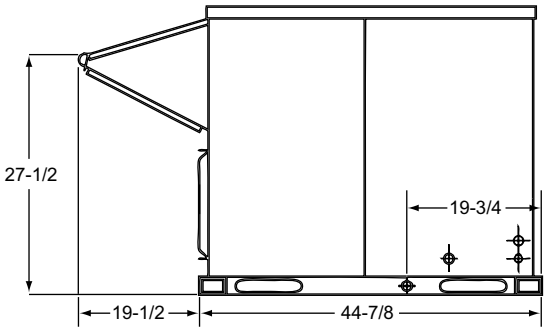

Detail “A”

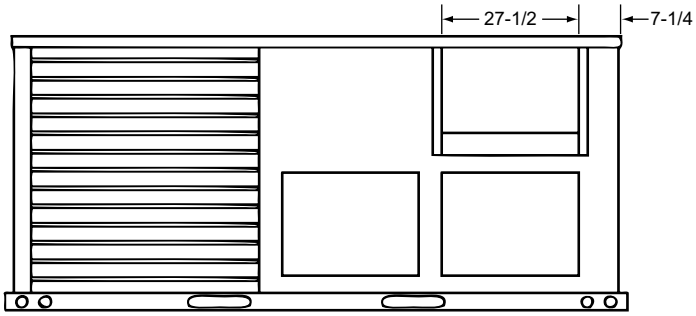

Rear View

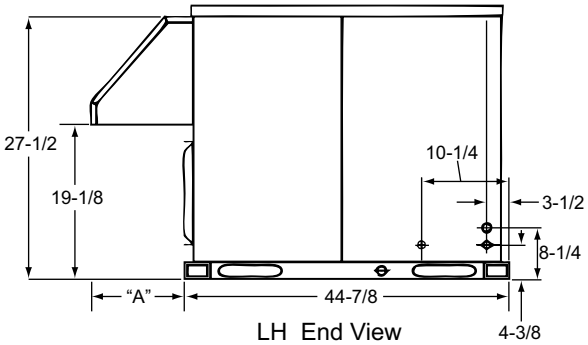

LH End View

Dimension “A”	
Fixed Outdoor Air Damper	12
Motorized Damper	16-1/2

Detail “B”

ZE/XN036-072 Rear View

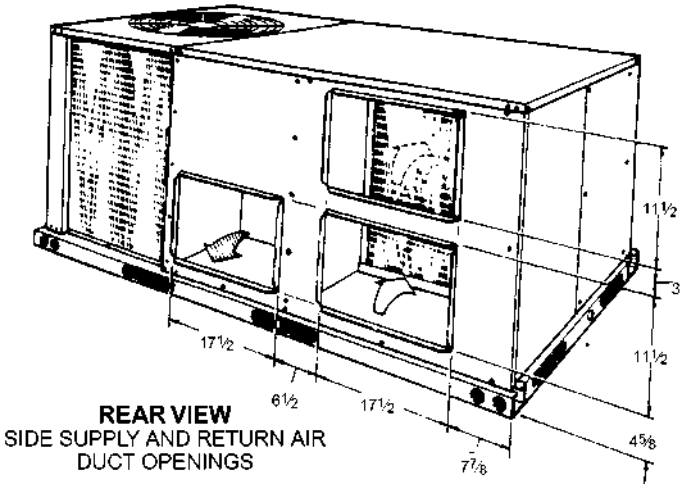

DUCT COVERS - Units are shipped with all air duct openings covered.
For side duct applications;
1. Remove and discard the supply and return air duct covers.
2. Connect ductwork to duct flanges on the rear of the unit.

For bottom duct applications;
1. Remove the side supply air duct cover to gain access to the bottom supply air knockout panel.
2. Remove and discard the bottom knockout panel.
3. Replace the side duct cover.
4. With filter section access panel removed from the unit, remove and discard the bottom return air knockout panel.
5. Replace the filter access panel.

ZE/XN036-072 Disconnect

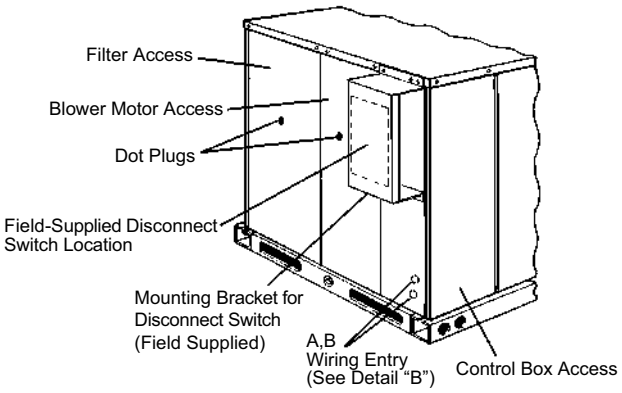

Disconnect Switch Location and Motor Access Panel for Unit with "Belt-Drive" Option

ZE/XN036-072 Utilities Entry

Hole	Opening Size (Dia.)	Used For	
A	7/8" KO[1]	Control Wiring[2]	Side
			Bottom
B	2" KO[1]	Power Wiring	Side
			Bottom
C	1-5/8" KO	Gas Piping (Front)	
D	1-1/2" KO	Gas Piping (Bottom)	

1. Opening in the bottom to the unit can be located by the slice in the insulation.
2. Do not remove the 2" knockout ring.

ZE/XN036-072 Minimum Clearances

Location	Clearance
Front	24" (Cooling/Electric Heat) 32" (Gas Heat)
Rear	12" (Less Economizer) 36" (With Economizer or Fixed Air/Motorized Damper)
Left Side (Filter Access)	24" (Less Economizer) 36" (With Economizer)
Right Side (Cond. Coil)	24"
Below Unit[1]	0"
Above Unit[2]	72" (For Condenser Air Discharge)

1. Units may be installed on combustible floors made from wood or class A, B, or C roof covering material.
2. Units must be installed outdoors. Overhanging structures or shrubs should not obstruct condenser air discharge outlet.

ZE/XN036-072 Roof Curb Cutaway

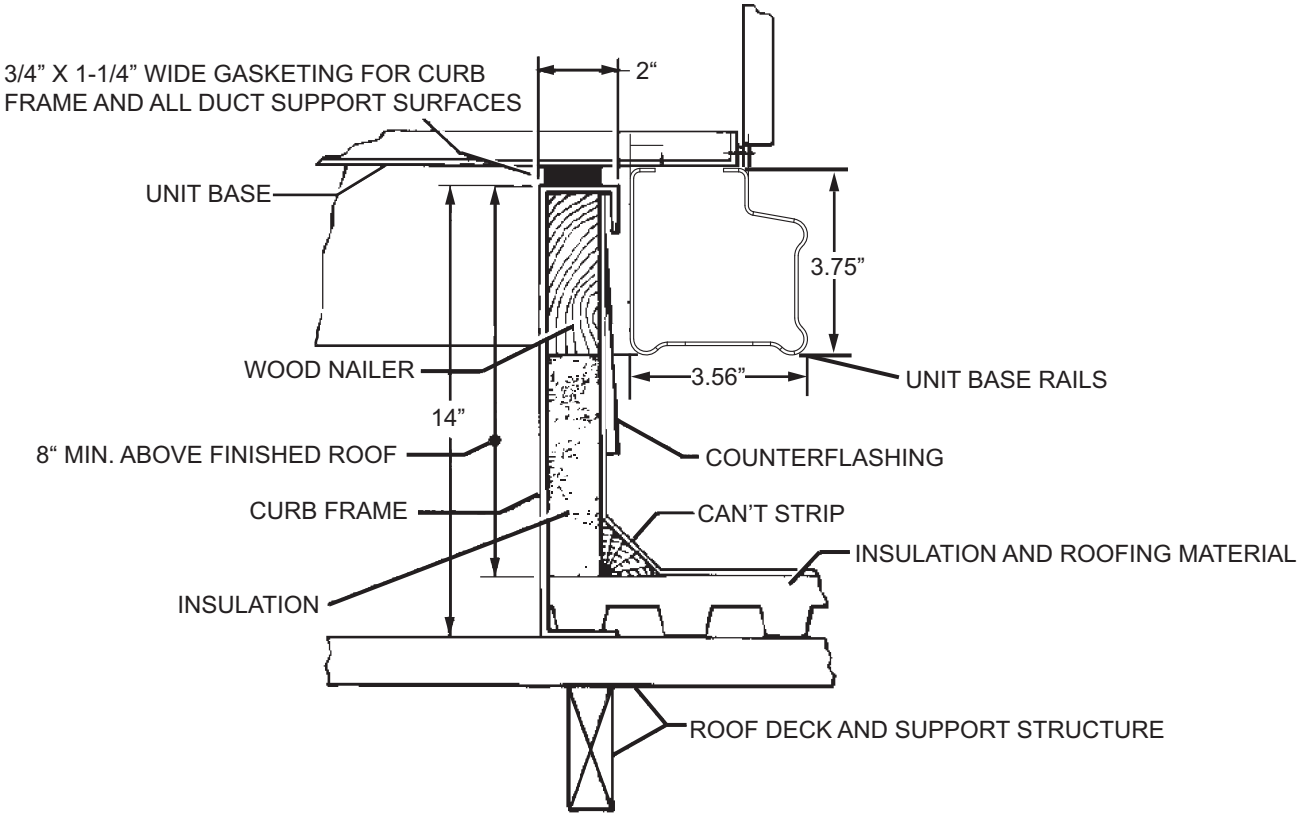

ZE/XN036-072 Roof Curb Dimensions

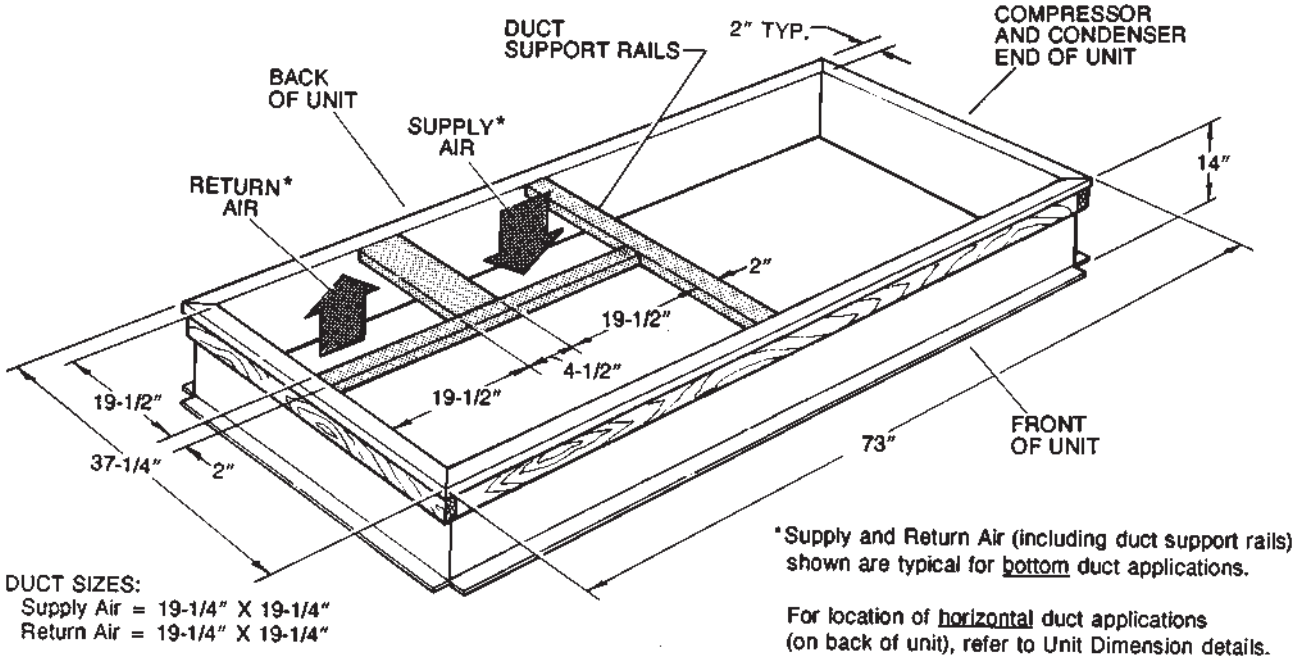

ZE/XN036-072 Typical Applications

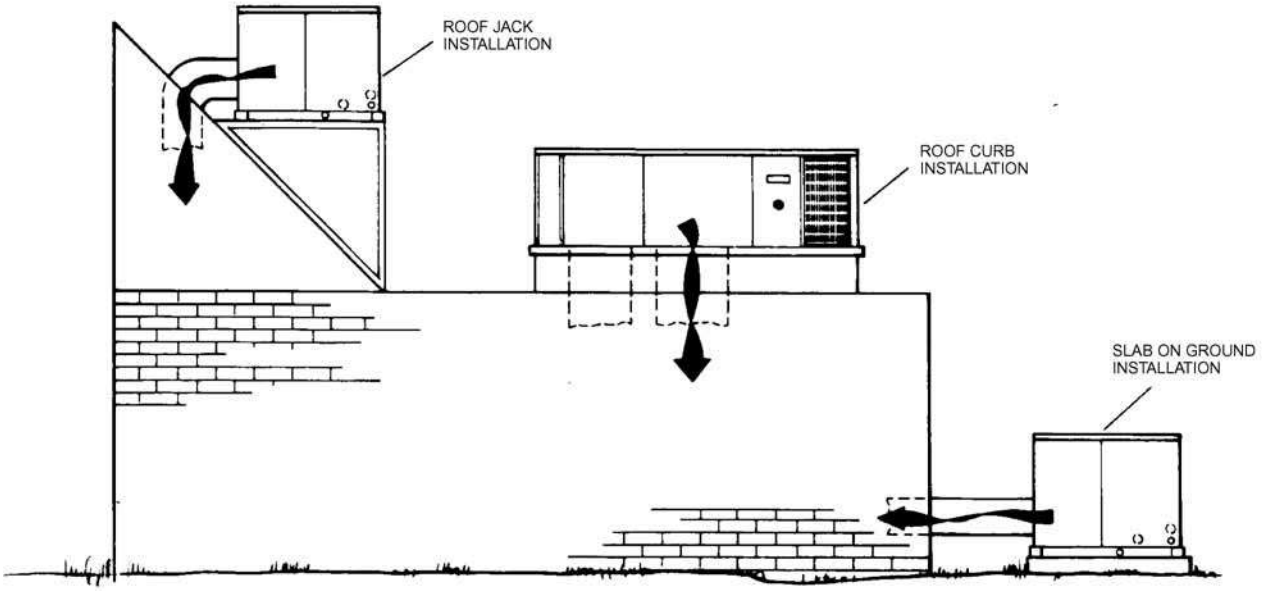

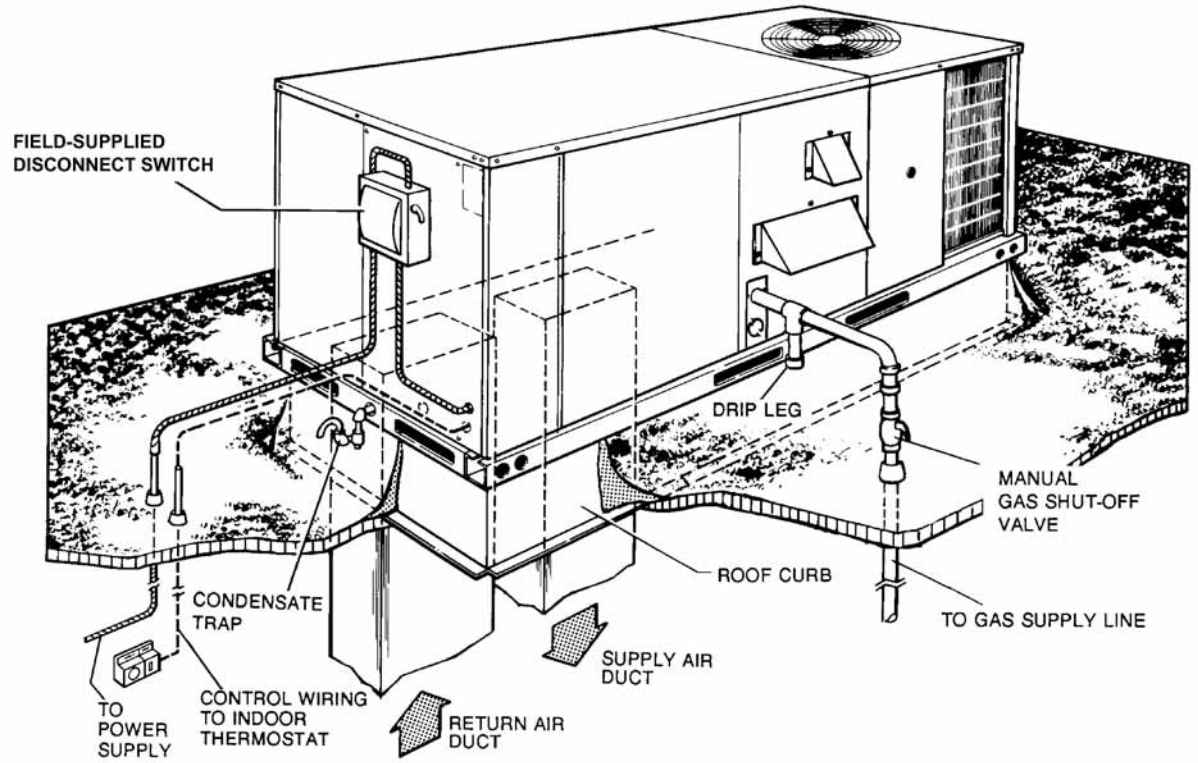

Subject to change without notice. Printed in U.S.A.
Copyright © 2020 by Johnson Controls, Inc. All rights reserved.

5190086-YTG-H-0220
Supersedes: 5190086-YTG-G-1119

York International Corporation
5005 York Drive
Norman, OK 73069