Product Data

WeatherMaster® Hybrid Heat Single Packaged Rooftop

6 to 10 Nominal Tons

ecoblue™ technology

48QE**07, 08, 09, 12
Single-Package Rooftop Heat Pump with Gas Heat
with Puron Advance™ Refrigerant (R-454B) and EcoBlue™ Technology

© 2026 Carrier

Features/Benefits

Introducing Carrier's WeatherMaster® Hybrid Heat Single Packaged Rooftop units (RTUs) with Puron Advance™ and EcoBlue™ Fan Technology.

The WeatherMaster line has always stood for cooling solutions that are innovative, high quality, and easy to use. Carrier's new 48QE hybrid heat pump rooftop units continue that legacy with Puron Advance, our low global warming potential refrigerant. With competitive efficiencies, EcoBlue fan technology, hybrid heat technology, and direct fit footprints, new installations and replacements are easier than ever.

Major design features include:

- Puron Advance (R-454B) refrigerant, which delivers a 75% reduction in global warming potential (GWP) compared to the original Puron (R-410A). Puron Advance's GWP of 466 easily exceeds the EPA (Environmental Protection Agency) requirement of <700 GWP.
- New Hybrid Heat technology which pairs a high efficiency heat pump with the reliability and occupant comfort of gas heat.
- A patented, industry-first vane axial indoor fan system with an electronically commutated motor for simplicity and efficiency. When compared to traditional belt-driven forward curve fans, our reliable system has:
  - 75% fewer moving parts
  - Up to 40% greater efficiency
  - No fan belts, pulleys, shaft, or shaft bearings
  - Better sound and comfort due to slow ramp-up capability
  - Internal protection from phase reversal and phase loss situations
  - High external static capability
  - Slide-out blower assembly design
- Reliable and highly protected 2-stage cooling with tandem scroll compressors technology and fully active evaporator coil
- Reliable copper tube/aluminum fin condenser coil with 5/16 in. tubing to help reduce refrigerant charge and weight versus prior designs

Designed to fit on existing roof curbs, Carrier 48QE 6 to 10 ton models make replacements even easier.

Two-speed staged air volume (SAV) Vane Axial indoor fan speed control helps deliver IEERs up to 17.0 and COP up to 3.7.

With "no-strip" screw collars, handled access panels, and more, the unit is easy to install, easy to maintain, and easy to use. Your new 6 to 10 ton Carrier WeatherMaster rooftop unit (RTU) provides optimum comfort and control from a packaged rooftop.

Value-added features include:

- optional Humidi-MiZer® adaptive dehumidification system for improved part load humidity performance
- SystemVu™ intuitive intelligent controller (standard) that provides
  - Large, full text, multi-line display
  - USB flash port for data transfer
  - Built-in i-Vu®, CCN, and BACnet®[1]
  - Easy to read refrigerant pressures shown via the display — no checking gauges
  - Quick LED Status for Run, Alert, and Fault
  - Conventional thermostat or sensor capabilities
  - Historical component runtime and starts
  - Supply air tempering
  - Network Service Tool compatible
- Single point gas and electrical connections
- TXV refrigerant metering system
- Scroll compressors with internal line-break overload protection
- Easy-to-access tool-less filter door, filter tracks that tilt out for filter removal and replacement, and filter size consistency across units

Installation ease

Lighter units make for easy replacement and aid in the structural approval process. All units have SystemVu controls standard for easy, tool free commissioning. Clearly labeled connection points reduce installation time, and a large control box provides room to work and mount Carrier accessories.

1. Third-party trademarks and logos are the property of their respective owners.

Table of contents

	Page
Features/Benefits	2
Model Number Nomenclature	5
Capacity Ratings	6
Physical Data	9
Options and Accessories	12
Base Unit Dimensions	17
Accessory Dimensions	26
Performance Data	28
Fan Data	46
Electrical Data	63
Typical Wiring Diagrams	67
Sequence of Operation	76
Application Data	79
Guide Specifications	81

Features/Benefits (cont)

Easy to maintain

With the EcoBlue vane axial fan system and a direct drive ECM motor, belts and pulleys are a thing of the past. This frees up maintenance, installation and commissioning time. Should an adjustment be necessary, it can easily be made via the SystemVu controller. For regular service activities, our easy-access handles provide a quick solution to all commonly accessed service panels, and our sloped, corrosion-resistant composite drain pan sheds water and will not rust. Service gauge connections are included on compressor suction/discharge lines and before and after the filter drier to monitor system operation during maintenance. The SystemVu controller provides readable LEDs and fault information should an error occur.

Hybrid Heat flexibility

48QE models offer the best of both worlds. All units have onboard mechanical heating standard and are rigorously tested to ensure reliable reverse cycle heating operation. The result is a more sustainable heat source to keep occupants comfortable year-round. When the temperature dips and mechanical heating starts to diminish, 48QE models kick on gas heat to supplement the heat pump, in place of the electric strip heaters a traditional heat pump would use. This ensures occupants are comfortable with a proven reliable heat source that doesn't require upsized wires. On the coldest days of the year all 48QE models are automatically designed to read the outdoor air temperature and exclusively use gas heating to ensure occupants are comfortable and defrost cycles are minimized. All Hybrid Heat models allow building owners to adjust this change over temperature to provide maximum flexibility for a space's unique needs. The result is a powerful Hybrid Heat unit that makes electrification possible in cold environments.

Puron Advance™ features

In 2018, Carrier announced Puron Advance (R-454B) as our next generation refrigerant for light commercial rooftops. With a GWP of 466 and similar working pressure and performance to R-410A, Puron Advance easily exceeds the EPA's new, stringent <700 GWP refrigerant requirement while minimizing unit redesign. Like other next generation refrigerants (R-32, etc.), R-454B is classified as an "A2L" refrigerant by ASHRAE®[1] (American Society of Heating, Refrigerating, and Air-Conditioning Engineers). This designation means that R454B is "mildly flammable" under certain conditions. While this is a change from legacy "A1 — No Flame Propagation" refrigerants like Puron (R-410A), A2Ls are still very low on the flammability scale and quite safe for use. A2L refrigerants are difficult to ignite and have an extremely low flame speed — much less so than natural gas, propane, or even rubbing alcohol. At Carrier, we are committed to safety. As such, all of our Puron Advance rooftop units include a factory-installed dissipation control board and leak sensor designed to last the lifetime of the unit. This system is certified to UL 60335-2-40 and designed to work right away, without any field configuration or wiring. In the event of a leak, these systems are designed to automatically identify and resolve the issue by dissipating the refrigerant to minimize risk to equipment, buildings, or occupants.

EcoBlue™ technology

Our direct drive EcoBlue indoor fan system uses a vane axial fan and electronically commutated motor. The benefit is clear: when compared to legacy belt drive systems, this vane axial design has 75% fewer moving parts, uses up to 40% less energy, and has no belts, blower bearings, or shaft. The full fan and motor assembly also slides out for easier maintenance and service.

Streamlined control and integration

The 48QE's standard SystemVu controls make connecting these units into existing building automation systems easy.

Operating efficiency and flexibility

The 48QE rooftops meet the DOE 2023 efficiency standard, as well as ASHRAE (American Society of Heating, Refrigerating, and Air-Conditioning Engineers) 90.1 and IECC®[1] (International Energy Conservation Code) requirements.

Comfort control

Carrier's patented Humidi-MiZer® adaptive dehumidification system is an all-inclusive factory-installed option on gas heating/electric cooling and electric cooling/electric heat models. This system provides reliable, flexible operation to meet indoor part load sensible and latent requirements as well as multiple gas heat and electric heat sized to fit an array of applications.

---

1. Third-party trademarks and logos are the property of their respective owners.

Features/Benefits (cont)

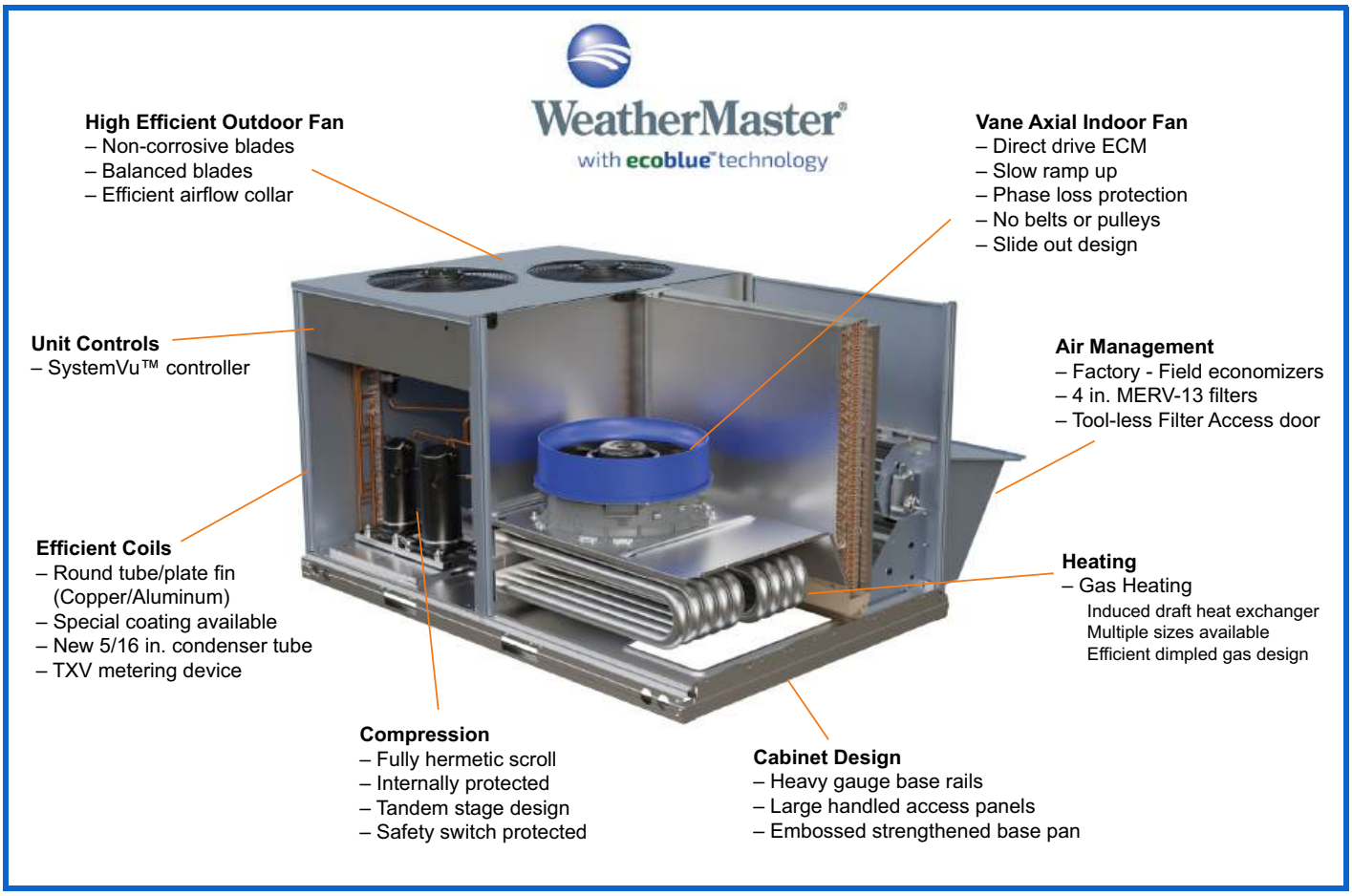

Model number nomenclature

48QE Model Number Nomenclature

Position:	1	2	3	4	5	6	7	8	9	10	11	12	13	14	15	16	17	18
Example:	4	8	Q	E	S	M	0	8	A	2	A	6	-	3	A	0	A	0

Unit Heat Type
48 = Gas Heat Packaged Rooftop

Model Series - WeatherMaster®
QE = Mid Tier Hybrid Heat with Puron Advance™

Heat Type
S = Low Gas Heat, Stainless Steel (SS) Heat Exchanger
R = Medium Gas Heat, SS Heat Exchanger
T = High Gas Heat, SS Heat Exchanger

Refrigerant Options
M = Two Stage Cooling/Single Circuit
N = Two-Stage Cooling/Single Circuit with Humidi-MiZer®

Cooling Tons
07 = 6.0 tons
08 = 7.5 tons
09 = 8.5 tons
12 = 10.0 tons

Sensor Options
A = None
B = Return Air Smoke Detector (RA)
C = Supply Air Smoke Detector (SA)
D = RA + SA Smoke Detector
J = Condensate Overflow Switch (COFS)
K = Condensate Overflow Switch + RA Smoke Detector
L = Condensate Overflow Switch + RA and SA Smoke Detectors
M = Condensate Overflow Switch + SA Smoke Detector

Indoor Fan Options - Vane Axial EcoBlue Fan System
2 = Standard/Medium Static Motor
3 = High Static Motor
5 = Standard/Medium Static Motor, Filter Status Switch
6 = High Static Motor - Vertical Supply and Filter Status Switch

Coil Options – RTPF (Outdoor – Indoor – Hail Guard)
A = Al/Cu – Al/Cu
B = Precoat Al/Cu – Al/Cu
C = E-coat Al/Cu – Al/Cu
D = E-coat Al/Cu – E-coat Al/Cu
M = Al/Cu – Al/Cu – Louvered Hail Guard
N = Precoat Al/Cu – Al/Cu – Louvered Hail Guard
P = E-coat Al/Cu – Al/Cu – Louvered Hail Guard
Q = E-coat Al/Cu – E-coat Al/Cu – Louvered Hail Guards
R = Cu/Cu – Al/Cu – Louvered Hail Guard
S = Cu/Cu – Cu/Cu – Louvered Hail Guard

Voltage
1 = 575-3-60
5 = 208/230-3-60
6 = 460-3-60

Design Revision
- = Factory Design Revision

Base Unit Controls
3 = SystemVu™ Controller

Intake / Exhaust Options
A = None
B = Temperature Economizer with Barometric Relief
F = Enthalpy Economizer with Barometric Relief
L = ULL (Ultra Low Leak) Temperature Economizer with Barometric Relief and CO_2 Sensor
M = ULL Enthalpy Economizer with Barometric Relief and CO_2 Sensor
U = ULL Temperature Economizer with Barometric Relief
W = ULL Enthalpy Economizer with Barometric Relief

Service Options
0 = None
1 = Unpowered Convenience Outlet (NPCO)
2 = Powered Convenience Outlet (PCO)
3 = Hinged Panels (HP)
4 = Hinged Panels + NPCO
5 = Hinged Access Panels + PCO
6 = MERV-13 Filters (M13)
7 = NPCO + MERV-13 Filters
8 = PCO + MERV-13 Filters
9 = Hinged Panels + MERV-13 Filters
A = HP + NPCO + MERV-13 Filters
B = HP + PCO + MERV-13 Filters
C = Foil Faced Insulation (FF)
D = FF + NPCO
E = FF + PCO
F = FF + HP
G = FF + HP + NPCO
H = FF + HP + PCO
J = FF + MERV-13 Filters
K = FF + NPCO + MERV-13 Filters
L = FF + PCO + MERV-13 Filters
M = FF + HP + MERV-13 Filters
N = FF + HP + NPCO + MERV-13 Filters
P = FF + HP + PCO + MERV-13 Filters

Electrical Options
A = None
B = HACR Breaker
C = Non-Fused Disconnect (NFDC)
D = Thru-The-Base Connections (TTB)
E = HACR +TTB
F = NFDC + TTB
N = Phase Monitor Protection (PMR)
P = PMR + HACR
Q = PMR + NFDC
R = PMR + TTB
S = PMR + HACR + TTB
T = PMR + NFDC + TTB
1 = HSCCR[a] (High Short Circuit Current Rating)
2 = HSCCR[a] + TTB

Packaging Compliance
0 = Standard

NOTE(S):
[a] Not available on the following models/options: 575V, Head Pressure Control, Phase Loss Monitor, Non-Fused Disconnect, HACR Breaker, Powered Convenience Outlet, Humidi-MiZer.

Capacity ratings

48QE AHRI Ratings — Cooling Mode[a,b,c,d]

UNIT	COOLING STAGES	NOM. CAPACITY (tons)	NET COOLING CAPACITY (BTU/HR)	TOTAL POWER (kW)	EER	IEER w/ 2 SPEED	AHRI RATING CFM	AHRI PART LOAD CFM
48QE*M07	2	6.0	72,000	5.9	12.3	17.0	2600	1560
48QE*M08	2	7.5	90,000	7.5	12.0	17.0	3000	1700
48QE*M09	2	8.5	100,000	8.3	12.0	17.0	3200	1600
48QE*M12	2	10.0	116,000	9.8	11.8	16.4	4400	2640

NOTE(S):

a. Rated in accordance with AHRI Standards 340/360.
b. Rating are based on:
Cooling Standard: 80°F (27°C) db, 67°F (19°C) wb indoor air temperature and 95°F (35°C) db outdoor air temperature.
c. Units comply with ASHRAE 90.1-2016 (American Society of Heating, Refrigerating, and Air-Conditioning Engineers) requirements, as well as DOE-2018 (Department of Energy) Energy Standard for minimum SEER and EER and DOE-2023 Energy Standards for minimum SEER2 and EER2 requirements. ASHRAE 90.1 requires M1 ratings on 3-phase models.
d. 48QE units comply with US Energy Policy Act (2005). To evaluate code compliance requirements, refer to state and local codes.

LEGEND

AHRI — Air Conditioning, Heating and Refrigeration Institute
EER — Energy Efficiency Ratio
SEER — Seasonal Energy Efficiency Ratio

48QE AHRI Ratings — Heating Mode[a,b,c,d]

UNIT	HEATING, LOW 17°F (–8°C) AMBIENT		HEATING, HIGH 47°F (8°C) AMBIENT		AHRI RATING CFM
	NET HEATING CAPACITY (BTU/HR)	COP	NET HEATING CAPACITY (BTU/HR)	COP	
48QE*M07	36,000	2.30	67,000	3.70	2600
48QE*M08	45,000	2.30	87,000	3.60	3000
48QE*M09	52,000	2.35	94,000	3.50	3200
48QE*M12	60,000	2.35	108,000	3.50	4400

NOTE(S):

a. Rated in accordance with AHRI Standards 340/360.
b. Rating are based on:
Cooling Standard: 80°F (27°C) db, 67°F (19°C) wb indoor air temperature and 95°F (35°C) db outdoor air temperature.
High Temperature Heating Ratings: 47°F (8°C) db, 43°F (6°C) wb outdoor air temperature and 70°F (21°C) entering indoor coil air.
Low Temperature Heating Ratings: 17°F (–8°C) db, 15°F (–9°C) wb outdoor air temperature and 70°F (21°C) entering indoor coil air.
c. Units comply with ASHRAE 90.1-2016 (American Society of Heating, Refrigerating, and Air-Conditioning Engineers) requirements, as well as DOE-2018 (Department of Energy) Energy Standard for minimum SEER and EER and DOE-2023 Energy Standards for minimum SEER2 and EER2 requirements. ASHRAE 90.1 requires M1 ratings on 3-phase models.
d. 48QE units comply with US Energy Policy Act (2005). To evaluate code compliance requirements, refer to state and local codes.

LEGEND

AHRI — Air Conditioning, Heating and Refrigeration Institute
COP — Coefficient of Performance

Capacity ratings (cont)

Sound Ratings[a,b,c]

UNIT	COOLING STAGES	OUTDOOR SOUND (dB) AT 60 Hz								
		A-Weighted	63	125	250	500	1000	2000	4000	8000
48QE*M07	2	81.0	86.7	82.7	79.1	78.4	75.4	71.2	67.8	62.9
48QE*M08	2	83.0	87.3	81.6	79.7	80.6	79.0	73.5	69.2	66.1
48QE*M09	2	87.0	61.7	74.7	77.4	82.6	84.9	81.9	78.8	75.9
48QE*M12	2	83.0	61.0	67.3	75.1	77.7	78.1	75.5	71.2	66.7

NOTE(S):

a. Outdoor sound data is measured in accordance with AHRI.
b. Measurements are expressed in terms of sound power. Do not compare these values to sound pressure values because sound pressure depends on specific environmental factors which normally do not match individual applications. Sound power values are independent of the environment and therefore more accurate.
c. A-weighted sound ratings filter out very high and very low frequencies, to better approximate the response of “average” human ear. A-weighted measurements for Carrier units are taken in accordance with AHRI.

LEGEND

dB — Decibel

Minimum - Maximum Airflow Ratings (cfm) — Natural Gas and Propane

UNIT	HEAT LEVEL	COOLING			SS HX HEATING[a]	
		MINIMUM 2-SPEED AIRFLOW (LOW SPEED)	MINIMUM 2-SPEED AIRFLOW (HIGH SPEED)	MAXIMUM AIRFLOW CFM	MINIMUM AIRFLOW CFM	MAXIMUM AIRFLOW CFM
48QE*M07	LOW	1080	1800	3000	990	3640
	MED				1730	3160
	HIGH				1750	3250
48QE*M08	LOW	1125	2250	3750	1730	3800
	MED				2100	3900
	HIGH				2240	4200
48QE*M09	LOW	1275	2550	4250	1730	4750
	MED				2100	4560
	HIGH				2240	4800
48QE*M12	LOW	1800	3000	5000	1880	7500
	MED				2450	9000
	HIGH				3000	9000

NOTE(S):

a. Stainless steel heat exchangers.

LEGEND

SS HX — Stainless Steel Heat Exchanger

Capacity ratings (cont)

Heat Rating Table — Natural Gas and Propane

UNIT	GAS HEAT	AL/SS HEAT EXCHANGER		TEMPERATURE RISE (°F)	THERMAL EFFICIENCY (%)
		INPUT/OUTPUT STAGE 1 (MBH)	INPUT/OUTPUT STAGE 2 (MBH)		
48QE*M07	LOW	55 / 41	72 / 59	15 - 55	82
	MED	90 / 66	125 / 103	30 - 55	82
	HIGH	115 / 96	150 / 123	35 - 65	82
48QE*M08	LOW	90 / 66	125 / 103	25 - 55	82
	MED	120 / 98	180 / 148	35 - 65	82
	HIGH	180 / 146	224 / 181	40 - 75	81
48QE*M09	LOW	90 / 66	125 / 103	20 - 55	82
	MED	120 / 98	180 / 148	30 - 65	82
	HIGH	180 / 146	224 / 181	35 - 75	81
48QE*M12	LOW	120 / 98	150 / 121	15 - 60	81
	MED	144 / 116	180 / 146	15 - 55	81
	HIGH	192 / 155	240 / 195	20 - 60	81

LEGEND

MBH — Btuh in thousands

Physical data

48QE 6 to 7.5 Ton Physical Data

48QE UNIT	48QE*M07	48QE*N07	48QE*M08	48QE*N08
NOMINAL TONS	6.0	6.0	7.5	7.5
BASE UNIT OPERATING WT (lb)[a]	839	864	875	909
REFRIGERATION SYSTEM				
No. Circuits/No. Compressors/Type	1 / 2 / Scroll	1 / 2 / Scroll	1 / 2 / Scroll	1 / 2 / Scroll
Puron Advance™ (R-454B) Charge A/B (lb-oz)	15-0	15-14	16-11	23-13
Cooling Metering Device	TXV	TXV	TXV	TXV
Heating Metering Device	TXV	TXV	TXV	TXV
High-Pressure Trip / Reset (psig)	630 / 505	630 / 505	630 / 505	630 / 505
Loss of Charge Trip / Reset (psig)	27 / 44	27 / 44	27 / 44	27 / 44
EVAPORATOR COIL				
Material (Tube / Fin)	Cu / Al	Cu / Al	Cu / Al	Cu / Al
Coil Type	3/8 in. RTPF	3/8 in. RTPF	3/8 in. RTPF	3/8 in. RTPF
Rows / FPI	3 / 15	3 / 15	4 / 15	4 / 15
Total Face Area (ft^2)	11.1	11.1	11.1	11.1
Condensate Drain Connection Size	3/4 in.	3/4 in.	3/4 in.	3/4 in.
CONDENSER COIL				
Material (Tube / Fin)	Cu / Al	Cu / Al	Cu / Al	Cu / Al
Coil Type	5/16 in. RTPF	5/16 in. RTPF	5/16 in. RTPF	5/16 in. RTPF
Rows / FPI	2 / 18	2 / 18	2 / 18	2 / 18
Total Face Area (ft^2)	25.1	25.1	25.1	25.1
HUMIDI-MIZER COIL				
Material (Tube / Fin)	—	Cu / Al	—	Cu / Al
Coil Type	—	5/16 in. RTPF	—	5/16 in. RTPF
Rows / FPI	—	2 / 18	—	2 / 18
Total Face Area (ft^2)	—	8	—	8
EVAPORATOR FAN AND MOTOR				
Standard/Medium Static 3 Phase				
Motor Qty / Drive Type	1 / Direct	1 / Direct	1 / Direct	1 / Direct
Maximum Cont Bhp	2.4	2.4	2.4	2.4
Rpm Range	250-2000	250-2000	250-2000	250-2000
Fan Qty / Type	1 / Vane Axial	1 / Vane Axial	1 / Vane Axial	1 / Vane Axial
Fan Diameter (in.)	22 in.	22 in.	22 in.	22 in.
High Static 3 Phase				
Motor Qty / Drive Type	1 / Direct	1 / Direct	1 / Direct	1 / Direct
Maximum Cont Bhp	3	3	3	3
Rpm Range	250-2200	250-2200	250-2200	250-2200
Fan Qty / Type	1 / Vane Axial	1 / Vane Axial	1 / Vane Axial	1 / Vane Axial
Fan Diameter (in.)	22 in.	22 in.	22 in.	22 in.
CONDENSER FAN AND MOTOR				
Qty / Motor Drive Type	2 / Direct	2 / direct	2 / Direct	2 / direct
Motor HP / Rpm	1/4 / 1100	1/4 / 1100	1/4 / 1100	1/4 / 1100
Fan Diameter (in.)	22 in.	22 in.	22 in.	22 in.
FILTERS				
RA Filter Qty / Size (in.)	4 / 20 x 20 x 2	4 / 20 x 20 x 2	4 / 20 x 20 x 2	4 / 20 x 20 x 2
OA Inlet Screen Qty / Size (in.)	1 / 20 x 24 x 1	1 / 20 x 24 x 1	1 / 20 x 24 x 1	1 / 20 x 24 x 1

NOTE(S):

a. Base unit operating weight does not include weight of options.

LEGEND

Bhp — Brake Horsepower
FPI — Fins Per Inch
OA — Outdoor Air
RA — Return Air

Physical data (cont)

48QE 7.5 to 10 Ton Physical Data

48QE UNIT	48QE*M09	48QE*N09	48QE*M12	48QE*N12
NOMINAL TONS	8.5	8.5	10.0	10.0
BASE UNIT OPERATING WT (lb)[a]	1010	1044	1296	1351
REFRIGERATION SYSTEM				
No. Circuits/No. Compressors/Type	1 / 2 / Scroll	1 / 2 / Scroll	1 / 2 / Scroll	1 / 2 / Scroll
Puron Advance™ (R-454B) Charge A/B (lb-oz)	19-0	28-0	20-8	34-8
Cooling Metering Device	TXV	TXV	TXV	TXV
Heating Metering Device	TXV	TXV	TXV	TXV
High-Pressure Trip/Reset (psig)	630 / 505	630 / 505	630 / 505	630 / 505
Loss of Charge Trip/Reset (psig)	27 / 44	27 / 44	27 / 44	27 / 44
EVAPORATOR COIL				
Material (Tube/Fin)	Cu / Al	Cu / Al	Cu / Al	Cu / Al
Coil Type	3/8 in. RTPF	3/8 in. RTPF	3/8 in. RTPF	3/8 in. RTPF
Rows/FPI	4 / 15	4 / 15	3 / 15	3 / 15
Total Face Area (ft^2)	11.1	11.1	17.5	17.5
Condensate Drain Connection Size	3/4 in.	3/4 in.	3/4 in.	3/4 in.
CONDENSER COIL				
Material	Cu / Al	Cu / Al	Cu / Al	Cu / Al
Coil Type	5/16 in. RTPF	5/16 in. RTPF	5/16 in. RTPF	5/16 in. RTPF
Rows/FPI	3 / 18	3 / 18	2 / 18	2 / 18
Total Face Area (ft^2)	25.1	25.1	36.1	36.1
HUMIDI-MIZER COIL				
Material (Tube / Fin)	—	Cu / Al	—	Cu / Al
Coil Type	—	5/16 in. RTPF	—	5/16 in. RTPF
Rows / FPI	—	2/18	—	2/18
Total Face Area (ft^2)	—	8	—	13.9
EVAPORATOR FAN AND MOTOR				
Standard/Medium Static 3 Phase				
Motor Qty/Drive Type	1 / Direct	1 / Direct	1 / Direct	1 / Direct
Maximum Cont Bhp	2.4	2.4	2.4	2.4
Rpm Range	250-2000	250-2000	250-2000	250-2000
Fan Qty/Type	1 / Vane Axial	1 / Vane Axial	1 / Vane Axial	1 / Vane Axial
Fan Diameter (in.)	22 in.	22 in.	22 in.	22 in.
High Static 3 Phase				
Motor Qty/Drive Type	1 / Direct	1 / Direct	1 / Direct	1 / Direct
Maximum Cont Bhp	3	3	5	5
Rpm Range	250-2200	250-2200	250-2200	250-2200
Fan Qty/Type	1 / Vane Axial	1 / Vane Axial	1 / Vane Axial	1 / Vane Axial
Fan Diameter (in.)	22 in.	22 in.	22 in.	22 in.
CONDENSER FAN AND MOTOR				
Qty / Motor Drive Type	1 / Direct	1 / direct	3 / Direct	3 / Direct
Motor HP/Rpm	1 / Multiple Speeds[b]	1 / Multiple Speeds[b]	1/4 / 1100	1/4 / 1100
Fan Diameter (in.)	30 in.	30 in.	22 in.	22 in.
FILTERS				
RA Filter Qty / Size (in.)	4 / 20 x 20 x 2	4 / 20 x 20 x 2	6 / 18 x 24 x 2	6 / 18 x 24 x 2
OA Inlet Screen Qty / Size (in.)	1 / 20 x 24 x 1	1 / 20 x 24 x 1	Vertical: 2 / 24 x 27 x 1 Horizontal: 1 / 30 x 39 x 1	Vertical: 2 / 24 x 27 x 1 Horizontal: 1 / 30 x 39 x 1

NOTE(S):

a. Base unit operating weight does not include weight of options.
b. 1050/770/450/350/265 rpm

LEGEND

Bhp — Brake Horsepower
FPI — Fins Per Inch
OA — Outdoor Air
RA — Return Air

Physical data (cont)

48QE 6 to 10 Ton Gas Heat Data

48QE UNIT	48QE*M07	48QE*M08	48QE*M09	48QE*M12
GAS CONNECTION				
No. of Gas Valves	1	1	1	1
Natural Gas Supply Line Pressure (in. wg)/(psig)	4-13 / 0.18-0.47	4-13 / 0.18-0.47	4-13 / 0.18-0.47	5-13 / 0.18-0.47
Liquid Propane Supply Line Pressure (in. wg)/(psig)	11-13 / 0.40-0.47	11-13 / 0.40-0.47	11-13 / 0.40-0.47	11-13 / 0.40-0.47
HEAT ANTICIPATOR SETTING (AMPS)				
First Stage	0.14	0.14	0.14	0.14
Second Stage	0.14	0.14	0.14	0.14
NATURAL GAS HEAT				
LOW				
No. of Stages / No. of Burners (total)	2 / 2	2 / 3	2 / 3	2 / 5
Connection Size	1/2 in. NPT	1/2 in. NPT	1/2 in. NPT	3/4 in. NPT
Rollout Switch Opens / Closes (°F)	195 / 115	195 / 115	195 / 115	225 / 145
Temperature Rise (°F)	15-55	25-55	20-55	15-60
MEDIUM				
No. of Stages / No. of Burners (total)	2 / 3	2 / 4	2 / 4	2 / 6
Connection Size	1/2 in. NPT	3/4 in. NPT	3/4 in. NPT	3/4 in. NPT
Rollout Switch Opens / Closes (°F)	195 / 115	195 / 115	195 / 115	225 / 145
Temperature Rise (°F)	30-55	35-65	30-65	15-55
HIGH				
No. of Stages / No. of Burners (total)	2 / 4	2 / 5	2 / 5	2 / 8
Connection Size	3/4 in. NPT	3/4 in. NPT	3/4 in. NPT	3/4 in. NPT
Rollout Switch Opens / Closes (°F)	195 / 115	195 / 115	195 / 115	225 / 145
Temperature Rise (°F)	35-65	40-75	35-75	20-60
LIQUID PROPANE HEAT				
LOW				
No. of Stages / No. of Burners (total)	2 / 2	2 / 3	2 / 3	2 / 5
Connection Size	1/2 in. NPT	1/2 in. NPT	1/2 in. NPT	3/4 in. NPT
Rollout Switch Opens / Closes (°F)	195 / 115	195 / 115	195 / 115	225 / 145
Temperature Rise (°F)	15-55	25-55	20-55	15-60
MEDIUM				
No. of Stages / No. of Burners (total)	2 / 3	2 / 4	2 / 4	2 / 6
Connection Size	1/2 in. NPT	3/4 in. NPT	3/4 in. NPT	3/4 in. NPT
Rollout Switch Opens / Closes (°F)	195 / 115	195 / 115	195 / 115	225 / 145
Temperature Rise (°F)	30-55	35-65	30-65	15-55
HIGH				
No. of Stages / No. of Burners (total)	2 / 4	2 / 5	2 / 5	2 / 8
Connection Size	3/4 in. NPT	3/4 in. NPT	3/4 in. NPT	3/4 in. NPT
Rollout Switch Opens / Closes (°F)	195 / 115	195 / 115	195 / 115	225 / 145
Temperature Rise (°F)	35-65	40-70	35-75	20-60

Options and accessories

ITEM	FACTORY-INSTALLED OPTION	FIELD-INSTALLED ACCESSORY
GAS HEAT		
Low, Medium, or High Gas Heat — Stainless Steel Heat Exchanger	X	
Propane Conversion Kit		X
High Altitude Conversion Kit		X
Flue Discharge Deflector		X
Flue Shield		X
CABINET		
Thru-the-Base Electrical or Gas Line Connections	X	X
Hinged Access Panels	X	
MERV-8 Filters, 2 in.		X
MERV-13 Filters, 2 in.		X
MERV-13 Filters, 4 in.	X	
4 in. Filter Rack (filters not included)		X
COIL OPTIONS		
Cu/Cu Indoor and/or Outdoor Coils[a]	X	
Pre-coated Outdoor Coils	X	
Premium, E-coated Indoor/ Outdoor Coils	X	
HUMIDITY CONTROL		
Humidi-MiZer® Adaptive Dehumidification System	X	
CONDENSER PROTECTION		
Condenser Coil Hail Guard (louvered design)[a]	X	X
CONTROLS		
Thermostats, Temperature Sensors, and Subbases		X
Smoke Detector (supply and/or return air)	X	X
Horn Strobe Annunciator[b]		X
Phase Monitor	X	X
Condensate Overflow Switch	X	X
ECONOMIZERS AND OUTDOOR AIR DAMPERS		
EconoMi$er® 2 for DDC Controls (Standard and Ultra Low Leak air damper models)[c]	X	X
Motorized Two-Position Outdoor-Air Damper		X
Manual Outdoor-Air Damper (25% and 50%)		X
Barometric Relief[d]	X	X
Power Exhaust — Prop Design		X

ITEM	FACTORY-INSTALLED OPTION	FIELD-INSTALLED ACCESSORY
ECONOMIZER SENSORS AND IAQ DEVICES		
Single Dry Bulb Temperature Sensors[e]	X	X
Differential Dry Bulb Temperature Sensors[e]		X
Single Enthalpy Sensors[e]	X	X
Differential Enthalpy Sensors[e]		X
CO_2 Sensor (wall, duct, or unit mounted)[e]	X	X
INDOOR FAN MOTOR		
Optional Indoor Fan Motors	X	
Fan Filter Status Switch	X	X
LOW AMBIENT CONTROL		
Low Ambient Controller to –20°F (–29°C)[f]		X
POWER OPTIONS		
Convenience Outlet (powered)	X	
Convenience Outlet (unpowered)	X	
Convenience Outlet, 20 amp (unpowered)		X
HACR Circuit Breaker[g]	X	
Non-Fused Disconnect[h]	X	
High SCCR Protection[i]	X	
ROOF CURBS		
Roof Curb 14 in. (356 mm)		X
Roof Curb 24 in. (610 mm)		X

NOTE(S):

a. Cu/Cu coils are only available with louvered hail guards.
b. Requires a field-supplied 24V transformer for each application. See price pages for details.
c. 48QE units are equipped with SystemVu controls (standard) which complies with California Title 24 Fault Detection and Diagnostic (FDD).
d. Included with economizer.
e. Sensors used to optimize economizer performance.
f. Size 09 models operate down to 0°F (–18°C) standard; Low Ambient control is not available.
g. HACR circuit breaker is sized for equipment installed on the unit at the factory. Any field installed equipment is not included in that sizing.
   48QE 07-09 MOCP limits:
   208/230/3/60 = 70 amps
   460/3/60 = 35 amps
   575/3/60 = 30 amps
   48QE 12 MOCP limits:
   208/230/3/60 = 80 amps
   460/3/60 = 35 amps
   575/3/60 = 30amps
   Carrier RTUBuilder automatically selects the amps limitations.
h. Non-fused disconnect switch cannot be used when unit electrical rating exceeds:
   48QE 07-09:
   208/230/3/60, 460/3/60, 575/3/60 = 80 amps (FLA)
   48QE 12:
   208/230/3/60 = 200 amps (FLA), 460/3/60, 575/3/60 = 100 amps (FLA)
   Carrier RTUBuilder automatically selects the amp limitations.
i. High SCCR (Short Circuit Current Rating) is not available on 575 volt units or units with factory-installed non-fused disconnect, phase loss monitor/protection, powered convenience outlet, Humidi-MiZer® system or HACR circuit breaker.

Factory-installed options

Economizer (dry-bulb or enthalpy)

Economizers save money. They bring in fresh, outside air for ventilation; and provide cool, outside air to cool your building. This is the preferred method of low-ambient cooling. When coupled to CO_2 sensors, economizers can provide even more savings by coupling the ventilation air to only that amount required.

Economizers are available, installed and tested by the factory, with either enthalpy or dry-bulb temperature inputs. Additional sensors are available as accessories to optimize the economizers. Economizers include barometric relief system to help equalize building pressures.

Economizers can be factory-installed or easily field-installed.

Unit mounted CO_2 sensor

The CO_2 sensor works with the economizer to intake only the correct amount of outside air for ventilation. As occupants fill your building, the CO_2 sensor detects their presence through increasing CO_2 levels and opens the economizer appropriately. When the occupants leave, the CO_2 levels decrease, and the sensor appropriately closes the economizer. This intelligent control of the ventilation air, called demand controlled ventilation (DCV), reduces the overall load on the rooftop, saving money. It is also available as a field-installed accessory.

Smoke detector (supply and/or return air)

Our smoke detectors make your application safer and your job easier. Carrier smoke detectors immediately shut down the rooftop unit when smoke is detected. They are available, installed by the factory, for supply air, return air, or both.

Optional Humidi-MiZer® adaptive dehumidification system

Carrier's Humidi-MiZer adaptive dehumidification system is an all-inclusive factory-installed option that can be ordered with any WeatherMaster® 48QE**07-12 rooftop unit.

This system expands the envelope of operation of Carrier's WeatherMaster rooftop products to provide unprecedented flexibility to meet year round comfort conditions.

The Humidi-MiZer adaptive dehumidification system has a unique dual operational mode setting. The Humidi-MiZer system provides greater dehumidification of the occupied space by 2 modes of dehumidification operations in addition to its normal design cooling mode.

The WeatherMaster 48QE**07-12 rooftop coupled with the Humidi-MiZer system is capable of operating in normal design cooling mode, sub-cooling mode, and hot gas reheat mode. Normal design cooling mode is when the unit will operate under its normal sequence of operation by cycling compressors to maintain comfort conditions.

Sub-cooling mode will operate to satisfy part load type conditions when the space requires combined sensible and a higher proportion of latent load control. Hot Gas Reheat mode will operate when outdoor temperatures diminish and the need for latent capacity is required for sole humidity control. Hot Gas Reheat mode will provide neutral air for maximum dehumidification operation.

NOTE: Humidi-MiZer system includes Low Ambient controller.

Thru-the-base connection

Thru-the-base connections, available as a factory option, are necessary to ensure proper connection and seal when routing wire and piping through the rooftop's basepan and curb. These couplings eliminate roof penetration and should be considered for gas lines, main power lines, and control power.

Hinged access panels

These specially designed hinged access panels allow access to the unit's major components. Panels allow access to filters, the control box, and the indoor fan motor.

MERV-13 return air filters

This factory option upgrades the return air filters from standard unit filters to high efficiency 4 in. MERV-13 filters. This option uses non-woven MERV-13 filter media with a high strength, moisture-resistant frame. Filter media is securely fastened inside the filter frame on all 4 sides.

Cu/Cu (indoor and outdoor) coils

Copper fins and copper tubes are mechanically bonded to copper tubes and copper tube sheets. A polymer strip prevents the coil assembly from contacting the sheet metal coil pan to minimize potential for galvanic corrosion between coil and pan. Only available with louvered hail guards.

E-coated (outdoor and indoor) coils

These coils feature a flexible epoxy polymer coating uniformly applied to all coil surface areas without material bridging between fins. The coating process ensures complete coil encapsulation of tubes, fins, and headers.

Pre-coated outdoor coils

These coils feature a durable epoxy-phenolic coating that provides protection in mildly corrosive coastal environments. The coating minimizes galvanic action between dissimilar metals. The coating is applied to the aluminum fin stock prior to the fin stamping process to create an inert barrier between the aluminum fin and copper tube.

Condenser coil hail guard

These sleek, louvered panels protect the condenser coil from hail damage, foreign objects, and incidental contact. This can be purchased as a factory-installed option or as a field-installed accessory.

Single enthalpy sensor

This sensor allows the economizer to account for both the humidity and temperature of outside air conditions, providing additional comfort.

Convenience outlet (powered or unpowered)

Reduce service and/or installation costs by including a convenience outlet in your specification. Carrier will install this service feature at our factory. It provides a convenient, 15 amp, 115-v GFCI receptacle with "Wet in Use" cover. The "powered" option allows the installer to power the outlet from the line side of the disconnect or load side as required by code.

The "unpowered" option is to be powered from a separate 115/120-v power source. This outlet is available as a 15 amp factory-installed option or a 20 amp field-installed accessory.

HACR Breaker

These manual reset devices provide overload and short circuit protection for the unit. Breakers are factory wired and mounted on the units, with an access cover to provide protection from the environment. They are sized for the unit as ordered from the factory. The sizing does not accommodate field-installed items such as power exhaust devices, etc

Non-fused disconnect

This OSHA-compliant, factory-installed safety switch allows a service technician to locally secure power to the rooftop. When selecting a factory-installed non-fused disconnect, note they are sized for the unit as ordered from the factory. The sizing does not accommodate field-installed items such as power exhaust devices, etc.

Condensate overflow switch

This sensor and related controller monitor the condensate level in the drain pan and shuts down compression operation when overflow conditions occur. This option:

- Includes an indicator light showing when the sensor is disconnected (blinking red) and when there has been more than 10 seconds of water contact (solid red — compressors disabled)
- Includes a 10-second delay to break, which eliminates nuisance trips from splashing or waves in the pan (sensor needs 10 seconds of constant water contact before tripping)
- Disables the compressor(s) operation when a condensate plug is detected but still allows fans to run for the economizer

Phase monitor protection

The phase monitor control monitors the sequence of the 3-phase electrical system to provide phase reversal protection and monitors the 3-phase voltage inputs to provide phase loss protection for the 3-phase device. It will work on either a Delta or Wye power connection.

Fan filter status switch and maintenance indicator

When the optional factory-installed filter maintenance indicator is used, a factory-installed differential pressure switch measures pressure drop across the outside air filter and activates a field-supplied dry contact indicator when the pressure differential exceeds the adjustable switch setpoint.

High Short Circuit Current Rating (SCCR) protection

This factory-installed option provides high short circuit current protection of 10 kA against high potential fault current situations for the compressor and all indoor and outdoor fan motors. (A standard unit comes with 5 kA rating.)

This option is not available on 575-v units or units with a factory-installed non-fused disconnect, Humidi-MiZer® system, HACR circuit breaker, phase loss monitor/protection, or powered convenience outlet.

Field-installed accessories

Condenser coil hail guard

These sleek, louvered panels protect the condenser coil from hail damage, foreign objects, and incidental contact. This can be purchased as a factory-installed option or as a field-installed accessory.

Differential enthalpy sensor

The differential enthalpy sensor is comprised of an outdoor and a return air enthalpy sensor to provide differential enthalpy control. The sensor allows the unit to determine whether outside air is suitable for free cooling.

Wall or duct mounted CO_2 sensor

The IAQ sensor shall be available for duct or wall mount. The sensor provides demand ventilation indoor air quality (IAQ) control.

Propane conversion kit

Convert your gas heat rooftop from standard natural gas operation to Propane using this field-installed kit.

High altitude conversion kit

High altitudes have less oxygen, which affects the fuel/air mixture in heat exchangers. In order to maintain a proper fuel/air mixture, heat exchangers operating in altitudes above 2000 ft (610 m) require different orifices. To select the correct burner orifices or determine the heat capacity for a high altitude application, use either the selection software or the unit's service manual. High altitudes have less oxygen, which means heat exchangers need less fuel. The new gas orifices in this field-installed kit make the necessary adjustment for high altitude applications. They restore the optimal fuel to air mixture and maintain healthy combustion at altitudes above 2000 ft (610 m).

NOTE: Typical natural gas heating value ranges from 975 to 1050 Btu/ft^3 at sea level nationally. The heating value goes down approximately 1.7% per every thousand feet of elevation. Standard factory orifices can typically be used up to 2000 ft (610 m) elevations without any operational issues.

Flue discharge deflector

The flue discharge deflector is a useful accessory when flue gas recirculation is a concern. By venting the flue discharge upwards, the deflector minimizes the chance for a neighboring unit to intake the flue exhaust.

4 in. filter rack kit

The 4 in. filter rack accessory kit is designed to hold 4 in. MERV-8 or MERV-13 filters. Filters not included in kit.

MERV-13 2 in. return air filters

This kit includes MERV-13 2 in. filters to accommodate unit filter rack size.

MERV-8 2 in. return air filters

This kit includes MERV-8 2 in. filters to accommodate unit filter rack size.

Phase monitor protection

The phase monitor control monitors the sequence of the 3-phase electrical system to provide phase reversal protection and monitors the 3-phase voltage inputs to provide phase loss protection for the 3-phase device. It will work on either a Delta or Wye power connection.

Low ambient controller[1]

The low ambient controller is a head pressure controller kit designed to maintain the unit's condenser head pressure during periods of low ambient cooling operation. This device should be used as an alternative to economizer free cooling when economizer usage is either not appropriate or not desired. The low ambient controller will either cycle the outdoor fan motors or operate them at reduced speed to maintain the unit operation, depending on the model. This controller allows cooling operation down to 0°F (–18°C) ambient conditions.

Roof curb (14 in./356 mm or 24 in./610 mm)

This full perimeter roof curb with exhaust capability provides separate air streams for energy recovery from the exhaust air without supply air contamination.

Fan filter status switch and maintenance indicator

When a field-installed filter maintenance indicator is used, a field-installed differential pressure switch measures pressure drop across the outside air filter and activates a field-supplied dry contact indicator when the pressure differential exceeds the adjustable switch setpoint.

Power exhaust

This accessory provides superior internal building pressure control and may eliminate the need for costly external pressure control fans.

Manual OA damper

Manual outdoor air dampers are an economical way to bring in ventilation air. The dampers are available in 25% and 50% versions.

Motorized two-position damper

The Carrier two-position, motorized outdoor air damper admits up to 100% outside air. Using reliable, gear-driven technology, the two-position damper opens to allow ventilation air and closes when the rooftop stops, stopping unwanted infiltration.

---

1. Size 09 models operate down to 0°F (-18°C) standard; Low Ambient controller is not available.

Options and accessories (cont)

Options and Accessory Weights[a]

OPTION / ACCESSORY NAME	48QE UNIT WEIGHT							
	07		08		09		12	
	lb	kg	lb	kg	lb	kg	lb	kg
Power Exhaust	55	25	55	25	55	25	85	39
EconoMi$er® 2	75	34	75	34	75	34	135	62
Two-Position Damper	58	26	58	26	58	26	65	29
Manual Damper	18	8	18	8	18	8	25	11
High Gas Heat	86	39	86	39	86	39	117	53
Hail Guard (louvered)	17	8	17	8	17	8	44	20
Humidi-MiZer® System[b]	25	12	34	16	34	16	55	25
Cu/Cu Condenser Coil	100	46	100	46	150	68	120	55
Cu/Cu Evaporator Coil	80	37	100	46	100	46	120	55
Roof Curb (14 in. curb)	143	65	143	65	143	65	180	82
Roof Curb (24 in. curb)	245	112	245	112	245	112	255	116
CO_2 Sensor	2	1	2	1	2	1	2	1
Flue Discharge Deflector	7	3	7	3	7	3	7	3
Optional Indoor Motor[c]	30	14	30	14	30	14	30	14
Low Ambient Controller	9	4	9	4	—	—	9	4
Return Air Smoke Detector	7	3	7	3	7	3	7	3
Supply Air Smoke Detector	7	3	7	3	7	3	7	3
Fan Filter Switch	2	1	2	1	2	1	2	1
Non-Fused Disconnect	15	7	15	7	15	7	15	7
Powered Convenience Outlet[d]	36	16	36	16	36	16	36	16
Unpowered Convenience Outlet	4	2	4	2	4	2	4	2
Enthalpy Sensor	2	1	2	1	2	1	2	1
Differential Enthalpy Sensor	3	1	3	1	3	1	3	1

NOTE(S):

a. Where multiple variations are available, the heaviest combination is listed.
b. For Humidi-MiZer system, add Low Ambient controller weight.
c. Add the Optional Indoor Motor weight to the weight of the base unit.
d. Weight includes convenience outlet and convenience outlet transformer.

48QE**07-08 Base Unit Dimensions

NOTES:

1. DIMENSIONS ARE IN INCHES, DIMENSIONS IN [ ] ARE IN MILLIMETERS.
2. CENTER OF GRAVITY
3. DIRECTION OF AIR FLOW
4. ALL VIEW DRAWN USING 3RD ANGLE

UNIT	OUTDOOR COIL TYPE	J	K	H
48QE 07	RTPF	49 3/8 [1253]	36 3/8 [925]	15 7/8 [403]
48QE 08	RTPF	49 3/8 [1253]	36 3/8 [925]	15 7/8 [403]
RTPF - ROUND TUBE, PLATE FIN (COPPER/ALUM)				

Carrier

THIS DOCUMENT IS THE PROPERTY OF CARRIER CORPORATION AND IS DELIVERED UPON THE EXPRESS CONDITION THAT THE CONTENTS WILL NOT BE DISCLOSED OR USED WITHOUT CARRIER CORPORATION'S WRITTEN CONSENT.

SUBMISSION OF THESE DRAWINGS OR DOCUMENTS DOES NOT CONSTITUTE PART PERFORMANCE OR ACCEPTANCE OF CONTRACT.

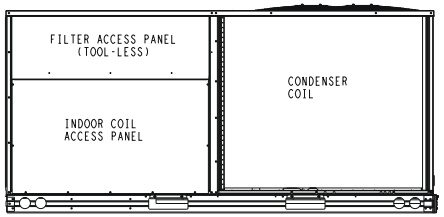

BACK

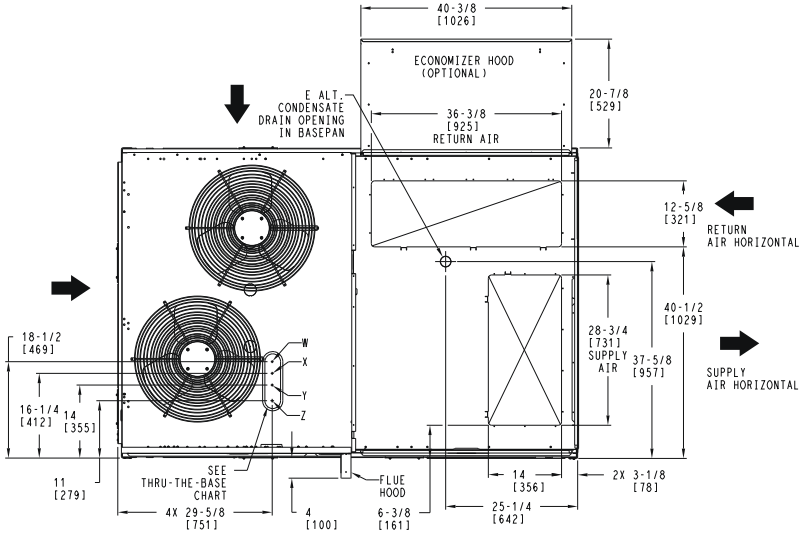

TOP

	CONNECTION SIZES
A	1 3/8" [35] DIA FIELD POWER SUPPLY HOLE
B	2 1/2" [64] DIA POWER SUPPLY KNOCKOUT
C	1 3/4" [51] DIA GAUGE ACCESS PLUG
D	7/8" [22] DIA FIELD CONTROL WIRING HOLE
E	3/4"-14 NPT CONDENSATE DRAIN
F	1/2"-14 NPT GAS CONNECTION 3/4"-14 NPT GAS CONNECTION
G	2" [51] DIA POWER SUPPLY KNOCK-OUT

THRU-THE-BASE CHART (FIELD INST)

THESE HOLES REQUIRED FOR USE WITH ACCY KITS:
CRBTMPWR002A01: GAS THRU CURB
CRBTMPWR004A01: GAS THRU BASEPAN

	THREADED CONDUIT SIZE	WIRE USE	REQ'D HOLE SIZES (MAX.)
W	1/2"	ACC.	7/8" [22.2]
X	1/2"	24V	7/8" [22.2]
Y	1 1/4" (002,004)	POWER	1 3/4" [44.4]
Z *	(004) 3/4" FPT	GAS	1 3/4" [44.4]
*	(002) PROVIDES 3/4" FPT THRU CURB FLANGE & FITTING. HOLE SIZE: 2" [50.8]		

THRU-THE-BASE CHART (FIOP)

FOR "THRU-THE-BASEPAN" FACTORY OPTION, FITTINGS FOR ONLY X, Y, & Z ARE PROVIDED. **

**	FOR BELOW LISTED MODELS, A FIELD SUPPLIED 1/2" ADAPTER IS REQUIRED BETWEEN BASE PAN FITTING AND GAS VALVE: 48QES*08

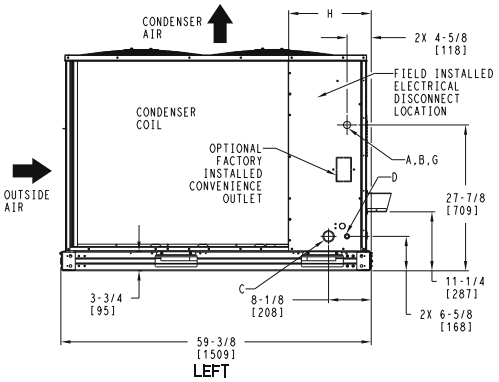

LEFT

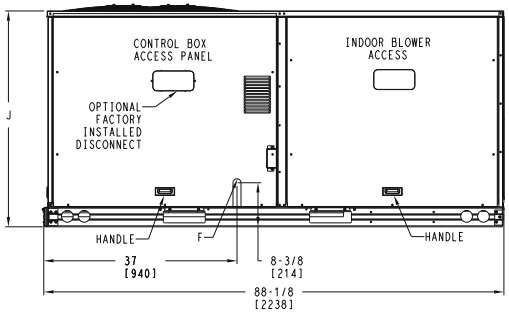

FRONT

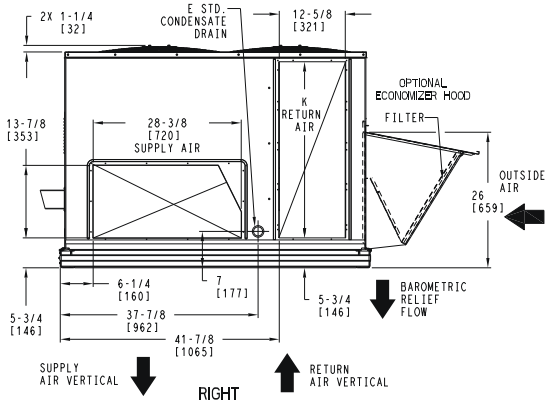

RIGHT

ITC CLASSIFICATION	SHEET	DATE	SUPERCEDES			REV
U.S. ECCN:NSR	1 OF 3	7/11/25	11/19/24	48QE 07,08 SINGLE ZONE ELECTRICAL HEAT PUMP WITH GAS HEAT	48TM010127	A

Base unit dimensions (cont)

48QE**07-08 Base Unit Dimensions (cont)

Carrier THIS DOCUMENT IS THE PROPERTY OF CARRIER CORPORATION AND IS DELIVERED UPON THE EXPRESS CONDITION THAT THE CONTENTS WILL NOT BE DISCLOSED OR USED WITHOUT CARRIER CORPORATION'S WRITTEN CONSENT. SUBMISSION OF THESE DRAWINGS OR DOCUMENTS DOES NOT CONSTITUTE PART PERFORMANCE OR ACCEPTANCE OF CONTRACT.

UNIT	OUTDOOR COIL TYPE	STD. UNIT WEIGHT ***		CORNER WEIGHT (A)		CORNER WEIGHT (B)		CORNER WEIGHT (C)		CORNER WEIGHT (D)		C.G.		
		LBS.	KG.	LBS.	KG.	LBS.	KG.	LBS.	KG.	LBS.	KG.	X	Y	Z
48QE 07	RTPF	839	381	253	115	198	90	170	77	218	99	38 5/8 [981]	32 [813]	19 1/8 [486]
48QE 08	RTPF	875	397	264	120	206	93	177	80	227	103	38 5/8 [981]	32 [813]	19 1/8 [486]

RTPF - ROUND TUBE, PLATE FIN (COPPER/ALUM)

*** STANDARD UNIT WEIGHT IS WITH LOW GAS HEAT AND WITHOUT PACKAGING.
FOR OTHER OPTIONS AND ACCESSORIES, REFER TO THE PRODUCT DATA CATALOG.

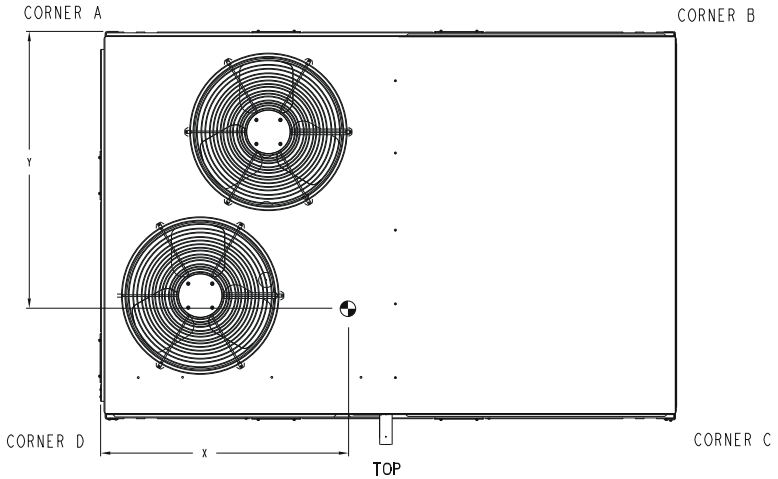

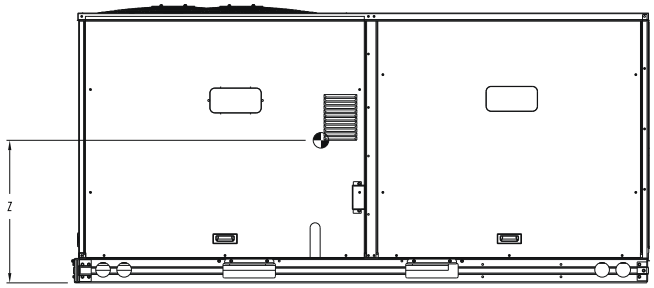

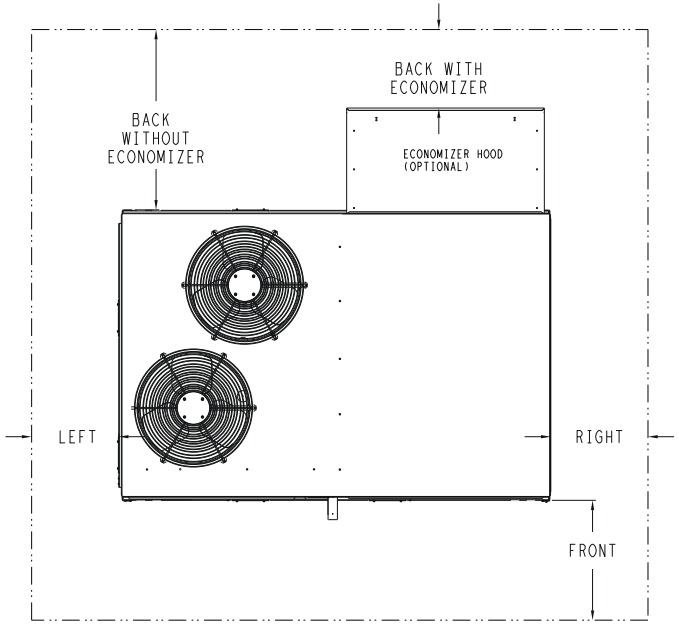

NOTE:

1. FOR ALL MINIMUM CLEARANCES LOCAL CODES OR JURISDICTIONS MAY PREVAIL.

CLEARANCE			
	SERVICE WITH:	SERVICE WITH:	OPERATING
SURFACE	CONDUCTIVE BARRIER	NONCONDUCTIVE BARRIER	CLEARANCE
FRONT	48 [1219mm]	36 [914mm]	18 [457mm]
LEFT	48 [1219mm]	42 [1067mm]	18 [457mm]
BACK W/O ECON	48 [1219mm]	42 [1067mm]	18 [457mm]
BACK W/ECON	36 [914mm]	36 [914mm]	18 [457mm]
RIGHT	36 [914mm]	36 [914mm]	18 [457mm]
TOP	72 [1829mm]	72 [1829mm]	72 [1829mm]

ITC CLASSIFICATION	SHEET	DATE	SUPERCEDES			REV
U.S. ECCN:NSR	2 OF 3	07/11/25	11/19/24	48QE 07,08 SINGLE ZONE ELECTRICAL HEAT PUMP WITH GAS HEAT	48TM010127	A

48QE**07-08 Base Unit Dimensions (cont)

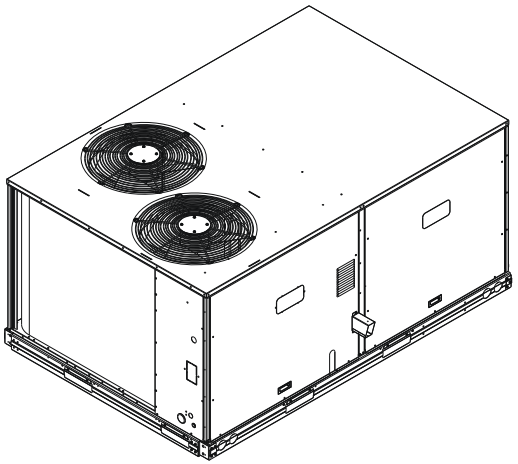

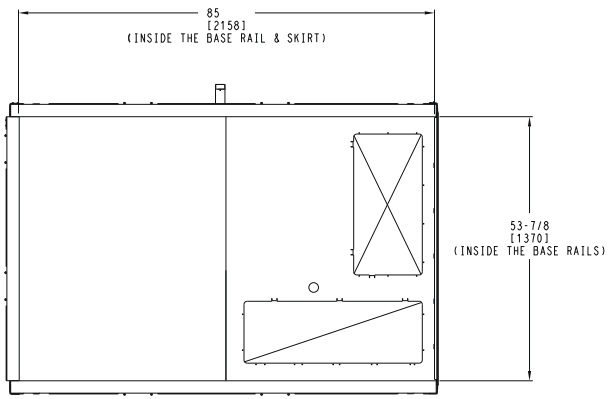

INSIDE BASERAIL DIMENSIONS

BOTTOM

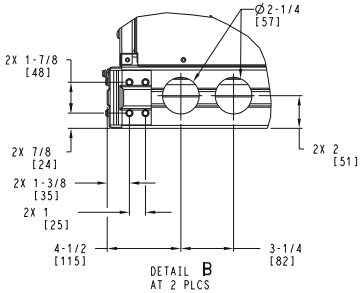

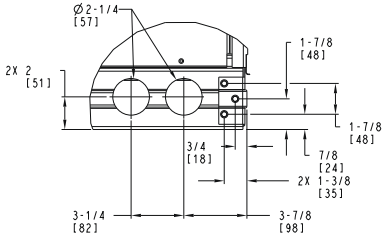

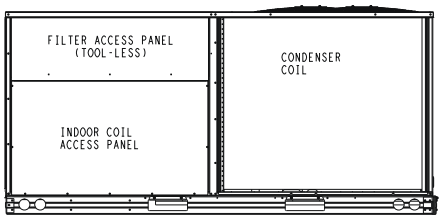

BACK

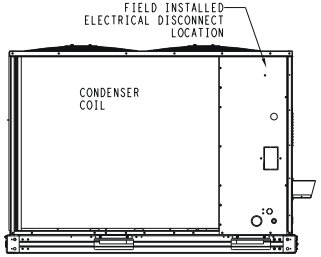

LEFT

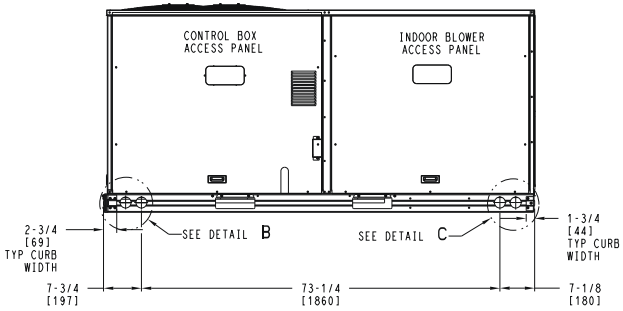

FRONT

ITC CLASSIFICATION	SHEET	DATE	SUPERCEDES			REV
U.S. ECCN: NSR	3 OF 3	7/11/25	11/19/24	48QE 07,08 SINGLE ZONE ELECTRICAL HEAT PUMP WITH GAS HEAT	48TM010127	A

THIS DOCUMENT IS THE PROPERTY OF CARRIER CORPORATION AND IS DELIVERED UPON THE EXPRESS CONDITION THAT THE CONTENTS WILL NOT BE DISCLOSED OR USED WITHOUT CARRIER CORPORATION'S WRITTEN CONSENT.

SUBMISSION OF THESE DRAWINGS OR DOCUMENTS DOES NOT CONSTITUTE PART PERFORMANCE OR ACCEPTANCE OF CONTRACT.

48QE**09 Base Unit Dimensions

NOTES:

1. DIMENSIONS ARE IN INCHES, DIMENSIONS IN [ ] ARE IN MILLIMETERS.
2. CENTER OF GRAVITY
3. DIRECTION OF AIR FLOW
4. ALL VIEW DRAWN USING 3RD ANGLE

UNIT	OUTDOOR COIL TYPE	H
48QE 09	RTPF	15 7/8 [403]
RTPF - ROUND TUBE, PLATE FIN (COPPER/ALUM)		

Carrier

THIS DOCUMENT IS THE PROPERTY OF CARRIER CORPORATION AND IS DELIVERED UPON THE EXPRESS CONDITION THAT THE CONTENTS WILL NOT BE DISCLOSED OR USED WITHOUT CARRIER CORPORATION'S WRITTEN CONSENT.

SUBMISSION OF THESE DRAWINGS OR DOCUMENTS DOES NOT CONSTITUTE PART PERFORMANCE OR ACCEPTANCE OF CONTRACT.

	CONNECTION SIZES
A	1 3/8" [35] DIA FIELD POWER SUPPLY HOLE
B	2 1/2" [64] DIA POWER SUPPLY KNOCKOUT
C	1 3/4" [51] DIA GAUGE ACCESS PLUG
D	7/8" [22] DIA FIELD CONTROL WIRING HOLE
E	3/4"-14 NPT CONDENSATE DRAIN
F	3/4"-14 NPT GAS CONNECTION
G	2" [51] DIA POWER SUPPLY KNOCK-OUT

THRU-THE-BASE CHART THESE HOLES REQUIRED FOR USE CRBTMPWR002A01,004A01			
	THREADED CONDUIT SIZE	WIRE USE	REQ'D HOLE SIZES (MAX.)
W	1/2"	ACC.	7/8" [22.2]
X	1/2"	24V	7/8" [22.2]
Y	1 1/4" (002,004)	POWER	1 3/4" [44.4]
Z*	(004) 3/4" FPT	GAS	1 5/8" [41.3]
	FOR "THRU-THE-BASEPAN" FACTORY OPTION, FITTINGS FOR ONLY X, Y, & Z ARE PROVIDED		
*	(002) PROVIDES 3/4" FPT THRU CURB FLANGE & FITTING.		

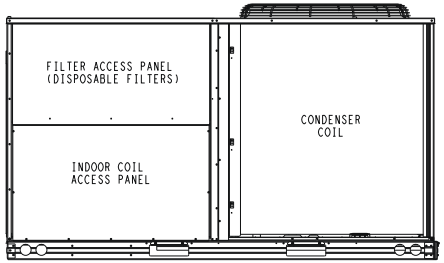

BACK

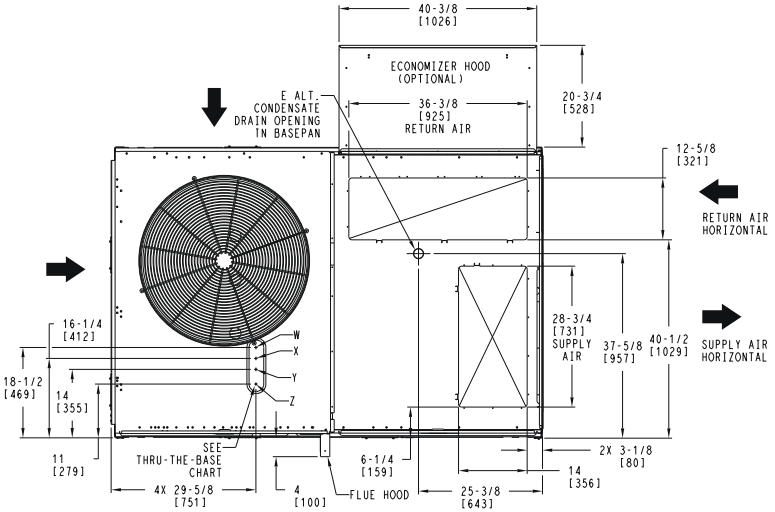

TOP

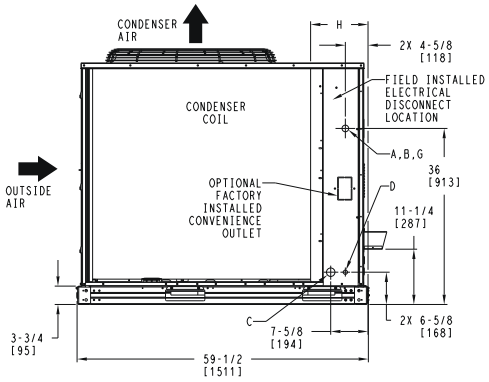

LEFT

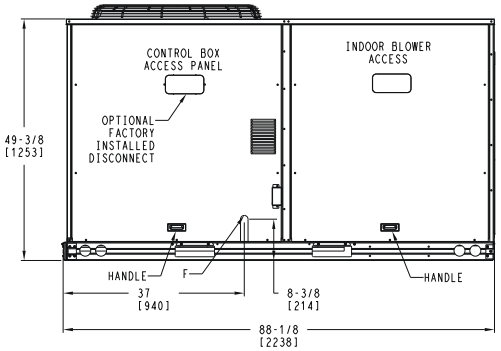

FRONT

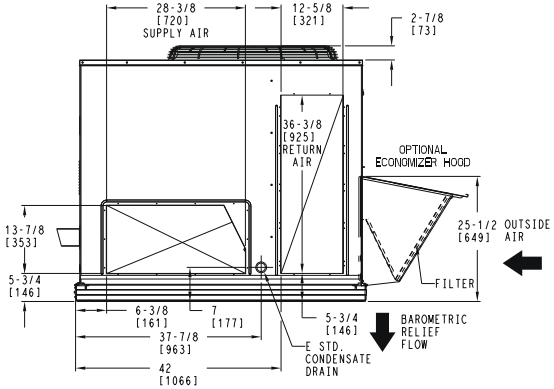

RIGHT

ITC CLASSIFICATION	SHEET	DATE	SUPERCEDES			REV
U.S. ECCN:NSR	1 OF 3	7/11/25	11/20/24	48QE-09 SINGLE ZONE ELECTRICAL HEAT PUMP WITH GAS HEAT	48TM010128	A

Carrier

48QE**09 Base Unit Dimensions (cont)

UNIT	OUTDOOR COIL TYPE	STD. UNIT WEIGHT***		CORNER WEIGHT (A)		CORNER WEIGHT (B)		CORNER WEIGHT (C)		CORNER WEIGHT (D)		C.G.		
		LBS.	KG.	LBS.	KG.	LBS.	KG.	LBS.	KG.	LBS.	KG.	X	Y	Z
48QE 09	RTPF	1010	458	310	141	242	110	201	91	257	117	38 5/8 [981]	32 1/2 [826]	19 1/8 [486]
RTPF - ROUND TUBE, PLATE FIN (COPPER/ALUM)														

*** STANDARD UNIT WEIGHT IS WITH LOW GAS HEAT AND WITHOUT PACKAGING.
FOR OTHER OPTIONS AND ACCESSORIES, REFER TO THE PRODUCT DATA CATALOG.

Carrier
THIS DOCUMENT IS THE PROPERTY OF CARRIER CORPORATION AND IS DELIVERED UPON THE EXPRESS CONDITION THAT THE CONTENTS WILL NOT BE DISCLOSED OR USED WITHOUT CARRIER CORPORATION'S WRITTEN CONSENT.
SUBMISSION OF THESE DRAWINGS OR DOCUMENTS DOES NOT CONSTITUTE PART PERFORMANCE OR ACCEPTANCE OF CONTRACT.

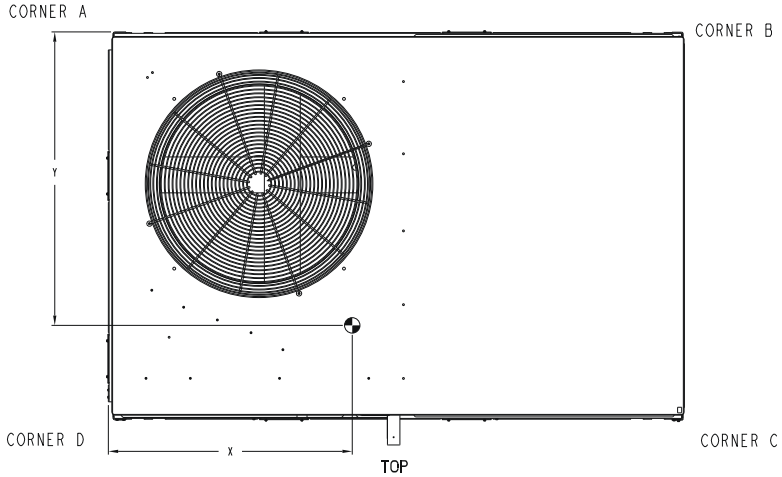

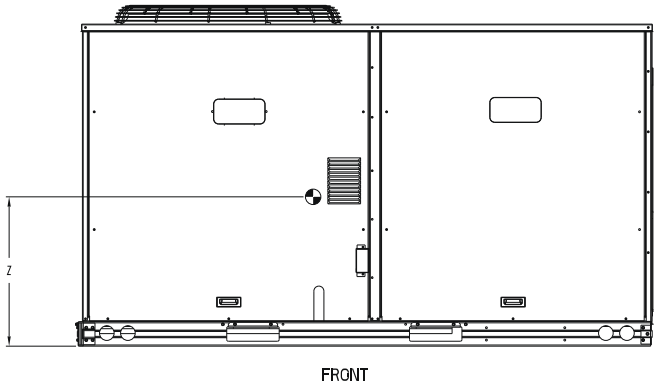

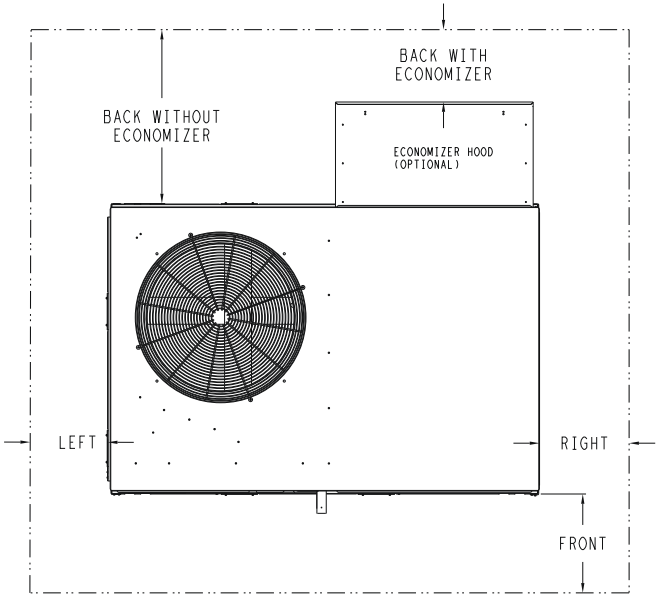

NOTE:

1. FOR ALL MINIMUM CLEARANCES LOCAL CODES OR JURISDICTIONS MAY PREVAIL.

CLEARANCE			
	SERVICE WITH:	SERVICE WITH:	OPERATING
SURFACE	CONDUCTIVE BARRIER	NONCONDUCTIVE BARRIER	CLEARANCE
FRONT	48 [1219mm]	36 [914mm]	18 [457mm]
LEFT	48 [1219mm]	42 [1067mm]	18 [457mm]
BACK W/O ECON	48 [1219mm]	42 [1067mm]	18 [457mm]
BACK W/ECON	36 [914mm]	36 [914mm]	18 [457mm]
RIGHT	36 [914mm]	36 [914mm]	18 [457mm]
TOP	72 [1829mm]	72 [1829mm]	72 [1829mm]

ITC CLASSIFICATION	SHEET	DATE	SUPERCEDES			REV
U.S. ECCN:NSR	2 OF 3	7/11/25	5/21/24	48QE-09 SINGLE ZONE ELECTRICAL HEAT PUMP WITH GAS HEAT	48TM010128	A

48QE**09 Base Unit Dimensions (cont)

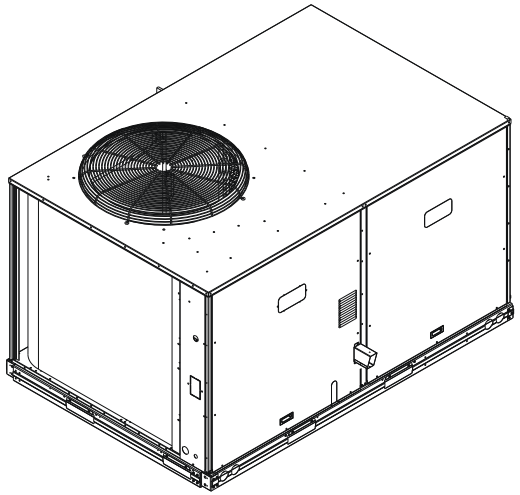

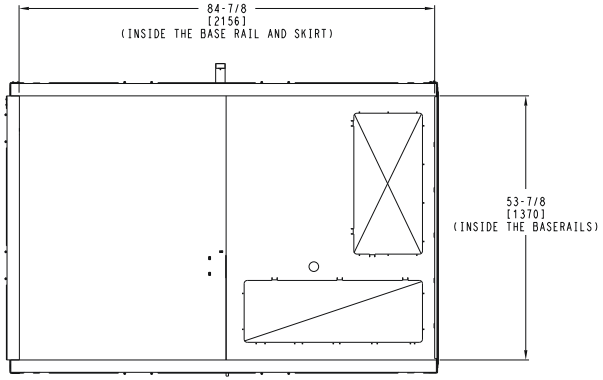

INSIDE BASERAIL DIMENSIONS
BOTTOM

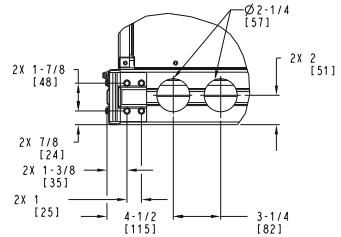

DETAIL B
AT 2 PLCS

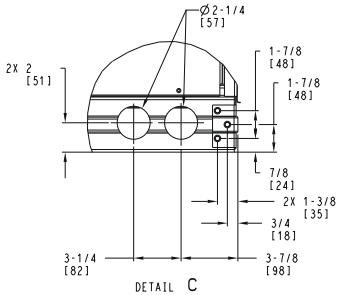

DETAIL C
AT 2 PLCS

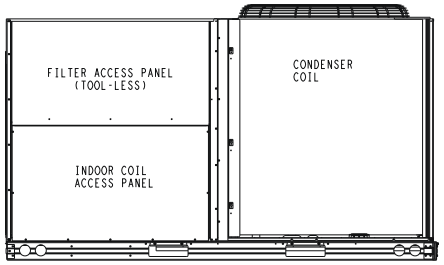

BACK

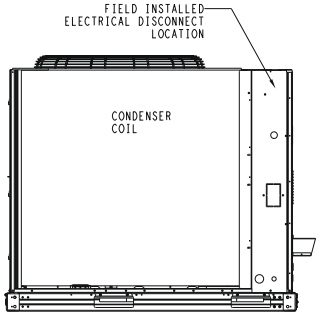

LEFT

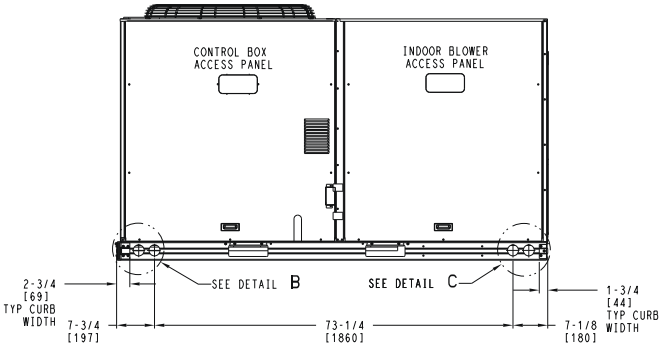

FRONT

ITC CLASSIFICATION	SHEET	DATE	SUPERCEDES			REV
U.S. ECCN:NSR	3 OF 3	7/11/25	5/21/24	48QE-09 SINGLE ZONE ELECTRICAL HEAT PUMP WITH GAS HEAT	48TM010128	A

THIS DOCUMENT IS THE PROPERTY OF CARRIER CORPORATION AND IS DELIVERED UPON THE EXPRESS CONDITION THAT THE CONTENTS WILL NOT BE DISCLOSED OR USED WITHOUT CARRIER CORPORATION'S WRITTEN CONSENT.

SUBMISSION OF THESE DRAWINGS OR DOCUMENTS DOES NOT CONSTITUTE PART PERFORMANCE OR ACCEPTANCE OF CONTRACT.

48QE**12 Base Unit Dimensions

NOTES:

1. DIMENSIONS ARE IN INCHES, DIMENSIONS IN [ ] ARE IN MILLIMETERS.
2. CENTER OF GRAVITY
3. DIRECTION OF AIR FLOW

Carrier | THIS DOCUMENT IS THE PROPERTY OF CARRIER CORPORATION AND IS DELIVERED UPON THE EXPRESS CONDITION THAT THE CONTENTS WILL NOT BE DISCLOSED OR USED WITHOUT CARRIER CORPORATION'S WRITTEN CONSENT. | SUBMISSION OF THESE DRAWINGS OR DOCUMENTS DOES NOT CONSTITUTE PART PERFORMANCE OR ACCEPTANCE OF CONTRACT.

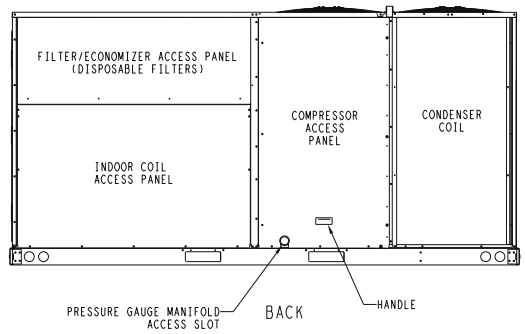

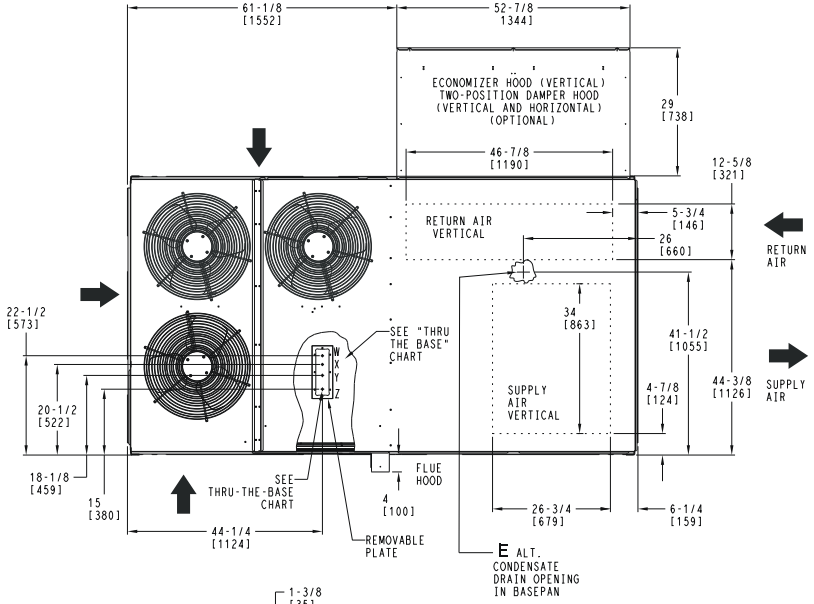

	CONNECTION SIZES
B	2 1/2" [64] DIA POWER SUPPLY HOLE
D	7/8" [22] DIA FIELD CONTROL WIRING HOLE
E	3/4"-14 NPT CONDENSATE DRAIN
F	7/8" [22] DIA FIELD CONVENIENCE OUTLET HOLE
G	3/4"-14 NPT GAS CONNECTION

THRU-THE-BASE CHART
THESE HOLES REQUIRED FOR USE
CRBTMPWR005A00,006A00,007A00

ACCESSORY NO.		THREADED CONDUIT SIZE	WIRE USE	REQ'D HOLE SIZES (MAX.)
005	W	1/2"	ACC.	7/8" [22.2]
	X	1/2"	24V	7/8" [22.2]
	Y	1 1/4"	POWER	1 1/2" [38.1]
	Z	3/4" PIPE	GAS	1 3/4" [44.5]
006	W	1/2"	ACC.	7/8" [22.2]
	X	1/2"	24V	7/8" [22.2]
	Y	1 1/2"	POWER	2" [50.8]
	Z	3/4" PIPE	GAS	1 3/4" [44.5]
007	W	1/2"	ACC.	7/8" [22.2]
	X	1/2"	24V	7/8" [22.2]
	Y	2"	POWER	2 1/2" [63.5]
	Z	3/4" PIPE	GAS	1 3/4" [44.5]
	FOR "THRU-THE-BASEPAN" FACTORY OPTION, FITTINGS FOR X & Y ARE PROVIDED AS SPECIFIED ON "006".			

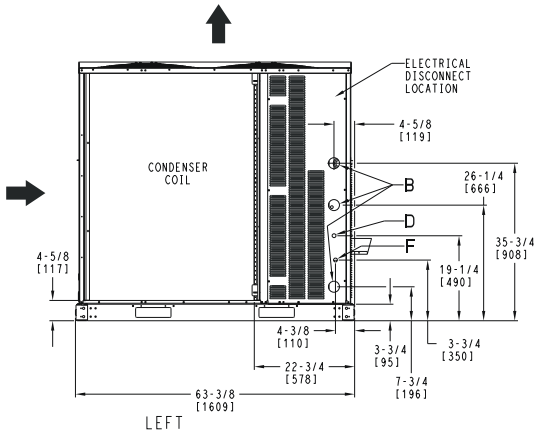

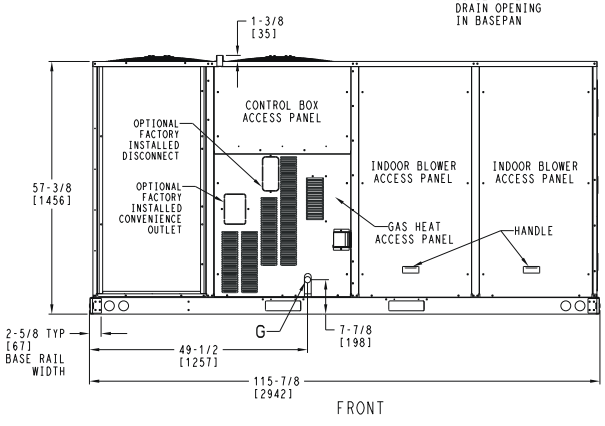

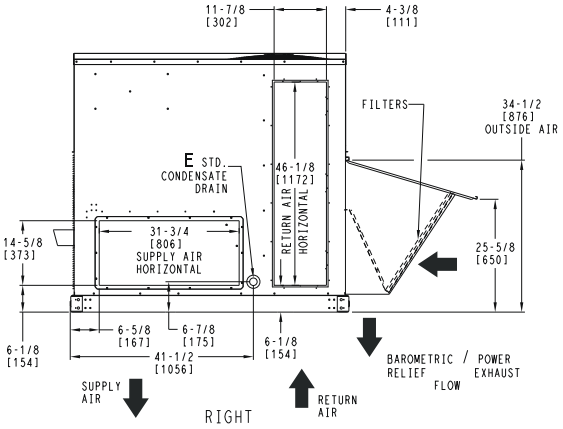

ITC CLASSIFICATION	SHEET	DATE	SUPERCEDES			REV
U.S. ECCN:NSR	1 OF 2	7/11/25	03/17/25	48QE 12 SINGLE ZONE ELECTRICAL HEAT PUMP WITH GAS HEAT	48TM010129	B

48QE**12 Base Unit Dimensions (cont)

UNIT	STD UNIT WEIGHT		CORNER WEIGHT (A)		CORNER WEIGHT (B)		CORNER WEIGHT (C)		CORNER WEIGHT (D)		C.G.		
	LBS.	KG.	LBS.	KG.	LBS.	KG.	LBS.	KG.	LBS.	KG.	X	Y	Z
48QE 12	1296	588	296	134	287	130	351	159	362	164	57 [1448]	28 1/2 [724]	24 [610]

STANDARD UNIT WEIGHT IS WITH LOW HEAT & WITHOUT PACKAGING.
FOR OPTIONS & ACCESSORIES, REFER TO THE PRODUCT DATA CATALOG.

Carrier
THIS DOCUMENT IS THE PROPERTY OF CARRIER CORPORATION AND IS DELIVERED UPON THE EXPRESS CONDITION THAT THE CONTENTS WILL NOT BE DISCLOSED OR USED WITHOUT CARRIER CORPORATION'S WRITTEN CONSENT.
SUBMISSION OF THESE DRAWINGS OR DOCUMENTS DOES NOT CONSTITUTE PART PERFORMANCE OR ACCEPTANCE OF CONTRACT.

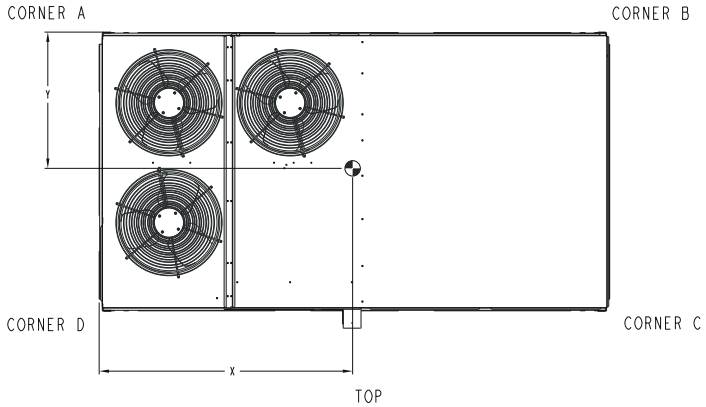

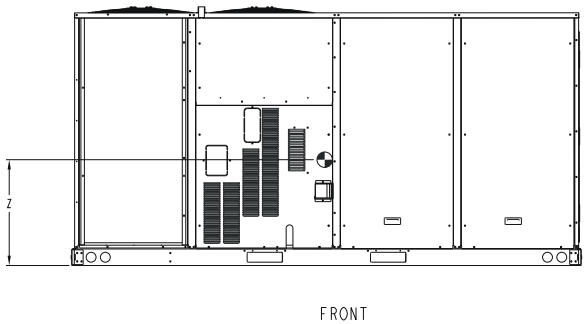

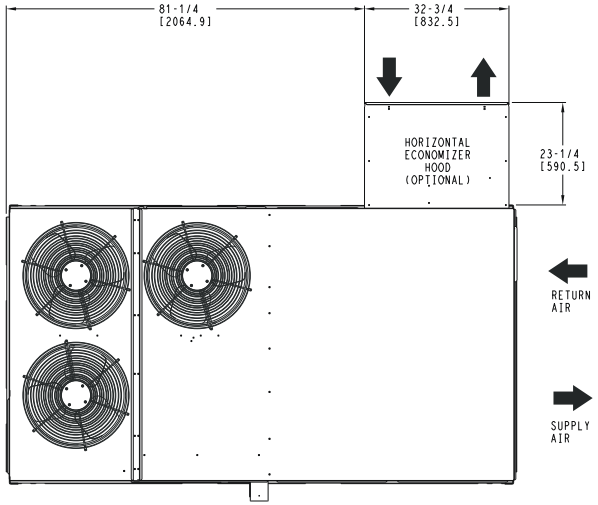

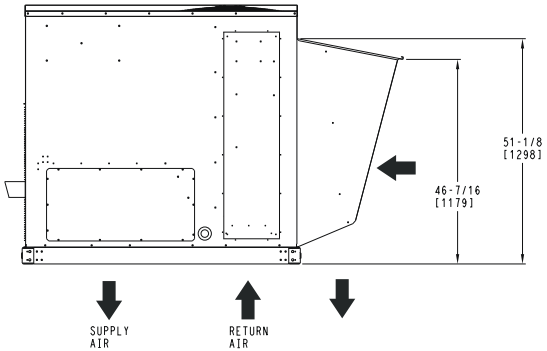

HORIZONTAL ECONOMIZER

ITC CLASSIFICATION	SHEET	DATE	SUPERCEDES			REV
U.S. ECCN:NSR	2 OF 2	7/11/25	3/17/25	48QE 12 SINGLE ZONE ELECTRICAL HEAT PUMP WITH GAS HEAT	48TM010129	B

48QE**12 Base Unit Dimensions — Clearances

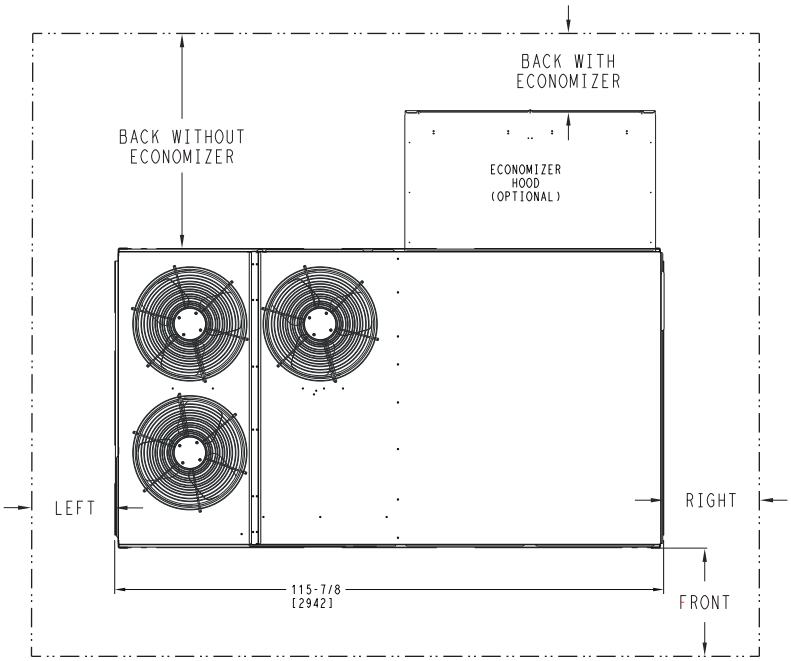

CLEARANCE[a, b]			
SURFACE	**Service with Conductive Barrier**	**Service with Non-conductive Barrier**	**Operating Clearance**
FRONT	48 in. (1219 mm)	36 in. (914 mm)	18 in. (457 mm)
LEFT	48 in. (1219 mm)	42 in. (1067 mm)	18 in. (457 mm)
BACK W/O ECONOMIZER	48 in. (1219 mm)	42 in. (1067 mm)	18 in. (457 mm)
BACK W/ ECONOMIZER	36 in. (914 mm)	36 in. (914 mm)	18 in. (457 mm)
RIGHT	36 in. (914 mm)	36 in. (914 mm)	18 in. (457 mm)
LEFT	72 in. (1829 mm)	72 in. (1829 mm)	72 in. (1829 mm)

NOTE(S):

a. For all minimum clearances local codes or jurisdictions may prevail.
b. See page 18 for 48QE 07-08 clearances. See page 21 for 48QE 09 clearances.

Roof Curb Dimensions — 48QE 07-09

ROOF CURB ACCESSORY #	A
CRRFCURB003A01	14" [356]
CRRFCURB004A01	24" [610]

NOTES:
1. ROOFCURB ACCESSORY IS SHIPPED DISASSEMBLED.
2. INSULATED PANELS: 25.4 [1"] THK. POLYURETHANE FOAM, 44.5 [1-3/4] # DENSITY.
3. DIMENSIONS IN [ ] ARE IN MILLIMETERS.
4. ROOFCURB: 18 GAGE STEEL.
5. ATTACH DUCTWORK TO CURB. (FLANGES OF DUCT REST ON CURB).
6. SERVICE CLEARANCE 4 FEET ON EACH SIDE.
7. ▨ DIRECTION OF AIR FLOW.
8. CONNECTOR PACKAGE CRBTMPWR002A01 IS FOR THRU-THE-CURB GAS TYPE PACKAGE CRBTMPWR004A01 IS FOR THRU-THE-BOTTOM TYPE GAS CONNECTIONS.

CONNECTOR PKG. ACC.	GAS CONNECTION TYPE	GAS FITTING	POWER WIRING FITTING	CONTROL WIRING FITTING	ACCESSORY CONVENIENCE OUTLET WIRING CONNECTOR
CRBTMPWR002A01	THRU THE CURB	3/4" [19] NPT	1 1/4" [31.7] NPT	1/2" [12.7] NPT	1/2" [12.7] NPT
CRBTMPWR004A01	THRU THE BOTTOM				

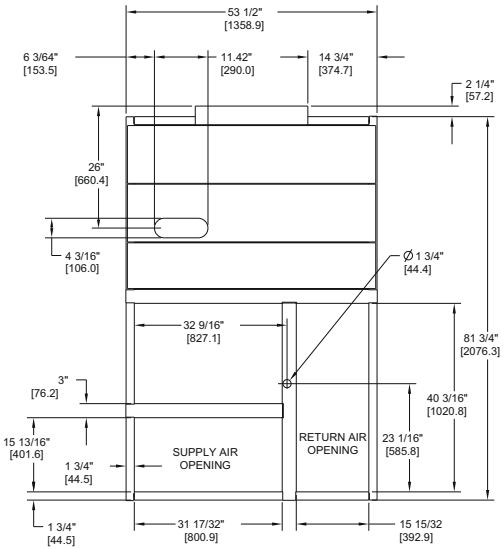

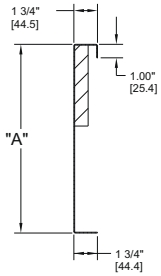

SECTION THRU SIDE

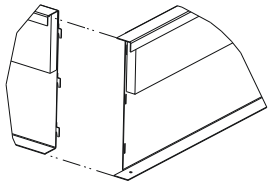

VIEW "B"
CORNER DETAIL

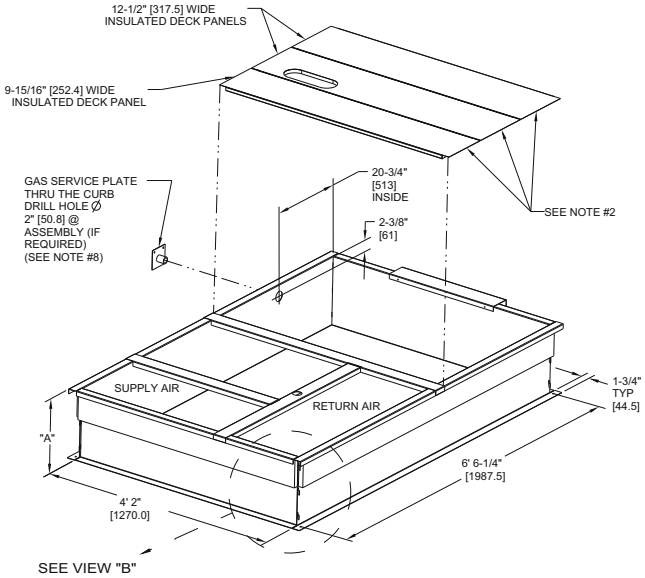

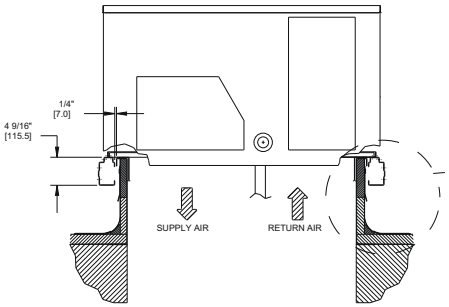

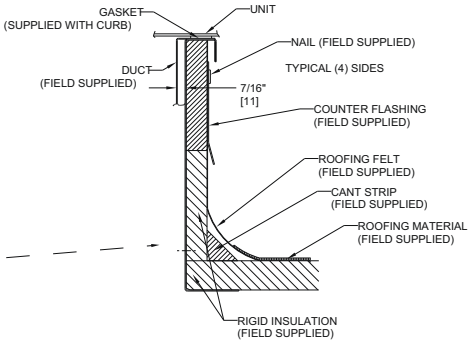

THIS DOCUMENT AND THE INFORMATION CONTAINED THEREIN IS PROPRIETARY TO CARRIER CORPORATION AND SHALL NOT BE USED OR DISCLOSED TO OTHERS, IN WHOLE OR IN PART, WITHOUT THE WRITTEN AUTHORIZATION OF CARRIER CORPORATION.

TITLE	
CURB ASY, ROOF	
DRAWING NUMBER	REV
50HJ405012	C

Roof Curb Dimensions — 48QE 12

ROOF CURB ACCESSORY #	A
CRRFCURB074A00	14" [356]
CRRFCURB075A00	24" [610]

NOTES:
1. ROOFCURB ACCESSORY IS SHIPPED DISASSEMBLED.
2. INSULATED PANELS: 1/2" THK. NEOPRENE FOAM, 1.0# DENSITY.
3. DIMENSIONS IN [ ] ARE IN MILLIMETERS.
4. ROOFCURB SIDEWALLS: 16 GAGE STEEL.
5. ATTACH DUCTWORK TO CURB. (FLANGES OF DUCT REST ON CURB).
6. SERVICE CLEARANCE 4 FT ON EACH SIDE.
7. ➡ DIRECTION OF AIR FLOW.
8. "L" & "S" DESIGNATIONS DENOTE LOCATION OF COMMON CROSS RAIL. (POSITION "L" FOR LARGE DUCT OPENING CURB).

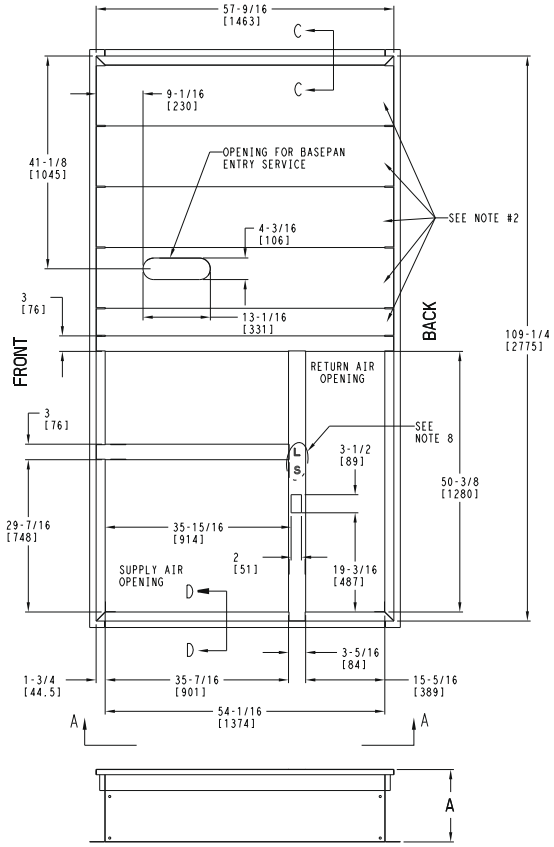

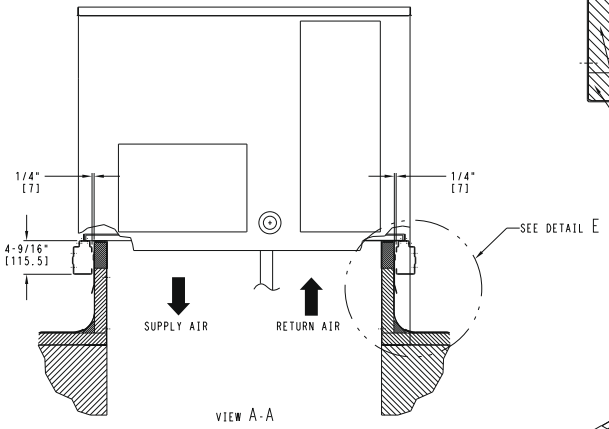

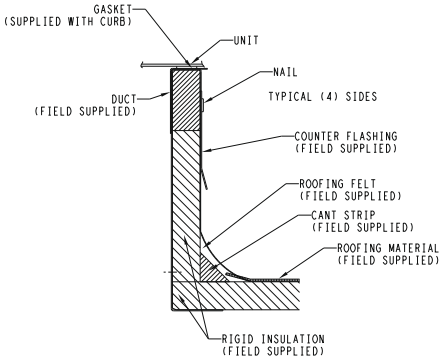

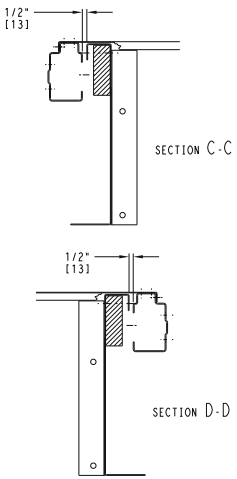

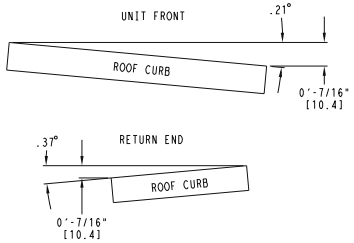

MAX CURB LEVELING TOLERANCES

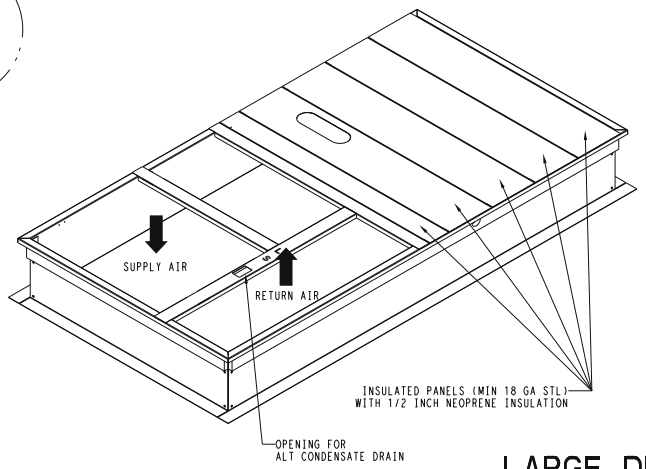

LARGE DUCT OPENINGS

50TM500780	REV B

48QE*M07 Two Stage Cooling Capacities[a]

48QE*M07				AMBIENT TEMPERATURE (°F)														
				85			95			105			115			125		
				EA (db)			EA (db)			EA (db)			EA (db)			EA (db)		
				75	80	85	75	80	85	75	80	85	75	80	85	75	80	85
1800 cfm	EA (wb)	58	TC	66.4	66.4	74.8	64.1	64.1	72.3	61.6	61.6	69.4	58.9	58.9	66.3	55.8	55.8	62.9
			SHC	58.0	66.4	74.8	56.0	64.1	72.3	53.8	61.6	69.4	51.4	58.9	66.3	48.7	55.8	62.9
		62	TC	69.5	69.5	71.5	66.6	66.6	70.1	63.4	63.4	68.5	59.9	59.9	66.8	56.2	56.2	64.7
			SHC	52.6	62.1	71.5	51.2	60.6	70.1	49.6	59.1	68.5	48.0	57.4	66.8	46.1	55.4	64.7
		67	TC	76.4	76.4	76.4	73.2	73.2	73.2	69.7	69.7	69.7	65.9	65.9	65.9	61.8	61.8	61.8
			SHC	43.2	52.8	62.3	41.9	51.4	60.9	40.4	49.9	59.4	38.8	48.3	57.8	37.1	46.6	56.1
		72	TC	83.9	83.9	83.9	80.4	80.4	80.4	76.6	76.6	76.6	72.6	72.6	72.6	68.2	68.2	68.2
			SHC	33.7	43.3	52.8	32.3	41.9	51.5	30.9	40.5	50.0	29.4	38.9	48.5	27.7	37.3	46.8
		76	TC	—	90.3	90.3	—	86.6	86.6	—	82.6	82.6	—	78.3	78.3	—	73.6	73.6
			SHC	—	35.5	45.2	—	34.2	44.1	—	32.8	42.6	—	31.3	41.0	—	29.6	39.4
2100 cfm	EA (wb)	58	TC	70.0	70.0	78.9	67.6	67.6	76.2	64.9	64.9	73.1	61.9	61.9	69.8	58.6	58.6	66.1
			SHC	61.1	70.0	78.9	59.0	67.6	76.2	56.6	64.9	73.1	54.0	61.9	69.8	51.2	58.6	66.1
		62	TC	71.7	71.7	78.4	68.7	68.7	76.9	65.4	65.4	75.0	62.0	62.0	72.5	58.7	58.7	68.7
			SHC	56.7	67.6	78.4	55.2	66.0	76.9	53.5	64.3	75.0	51.5	62.0	72.5	48.7	58.7	68.7
		67	TC	78.6	78.6	78.6	75.2	75.2	75.2	71.5	71.5	71.5	67.6	67.6	67.6	63.2	63.2	63.2
			SHC	45.9	56.9	67.9	44.5	55.5	66.5	43.0	54.0	65.0	41.4	52.4	63.4	39.7	50.7	61.6
		72	TC	86.2	86.2	86.2	82.6	82.6	82.6	78.6	78.6	78.6	74.3	74.3	74.3	69.7	69.7	69.7
			SHC	34.8	45.9	57.0	33.5	44.5	55.6	32.0	43.0	54.1	30.4	41.5	52.5	28.8	39.8	50.8
		76	TC	—	92.7	92.7	—	88.9	88.9	—	84.7	84.7	—	80.1	80.1	—	75.2	75.2
			SHC	—	36.9	48.3	—	35.6	46.9	—	34.2	45.4	—	32.6	43.8	—	30.9	42.1
2400 cfm	EA (wb)	58	TC	73.1	73.1	82.4	70.5	70.5	79.4	67.6	67.6	76.2	64.4	64.4	72.6	61.0	61.0	68.7
			SHC	63.8	73.1	82.4	61.5	70.5	79.4	59.0	67.6	76.2	56.2	64.4	72.6	53.2	61.0	68.7
		62	TC	73.6	73.6	84.6	71.3	71.3	79.4	67.6	67.6	79.1	64.5	64.5	75.4	61.0	61.0	71.4
			SHC	60.4	72.5	84.6	57.1	68.3	79.4	56.2	67.6	79.1	53.6	64.5	75.4	50.7	61.0	71.4
		67	TC	80.3	80.3	80.3	76.8	76.8	76.8	72.9	72.9	72.9	68.8	68.8	68.8	64.4	64.4	66.9
			SHC	48.5	60.9	73.4	47.0	59.5	71.9	45.5	58.0	70.4	43.9	56.3	68.7	42.1	54.5	66.9
		72	TC	88.0	88.0	88.0	84.2	84.2	84.2	80.1	80.1	80.1	75.7	75.7	75.7	70.9	70.9	70.9
			SHC	35.8	48.4	60.9	34.5	47.0	59.5	33.0	45.5	58.0	31.4	43.9	56.4	29.7	42.2	54.7
		76	TC	—	94.6	94.6	—	90.6	90.6	—	86.3	86.3	—	81.5	81.5	—	76.5	76.5
			SHC	—	38.2	51.0	—	36.9	49.6	—	35.4	48.1	—	33.8	46.5	—	32.2	44.8
2700 cfm	EA (wb)	58	TC	75.7	75.7	85.3	72.9	72.9	82.2	69.9	69.9	78.8	66.6	66.6	75.0	63.0	63.0	71.0
			SHC	66.1	75.7	85.3	63.7	72.9	82.2	61.0	69.9	78.8	58.1	66.6	75.0	55.0	63.0	71.0
		62	TC	76.8	76.8	84.2	73.0	73.0	85.3	70.0	70.0	81.8	66.6	66.6	77.9	63.0	63.0	73.7
			SHC	60.8	72.5	84.2	60.6	73.0	85.3	58.1	70.0	81.8	55.3	66.6	77.9	52.3	63.0	73.7
		67	TC	81.6	81.6	81.6	78.0	78.0	78.0	74.1	74.1	75.6	69.9	69.9	73.9	65.3	65.3	72.0
			SHC	50.9	64.8	78.7	49.5	63.4	77.2	47.9	61.8	75.6	46.3	60.1	73.9	44.5	58.2	72.0
		72	TC	89.4	89.4	89.4	85.5	85.5	85.5	81.2	81.2	81.2	76.7	76.7	76.7	71.8	71.8	71.8
			SHC	36.8	50.8	64.7	35.4	49.4	63.3	33.9	47.8	61.8	32.3	46.2	60.2	30.6	44.5	58.4
		76	TC	—	96.0	96.0	—	91.9	91.9	—	87.5	87.5	—	82.7	82.7	—	77.5	77.5
			SHC	—	39.4	53.6	—	38.0	52.2	—	36.6	50.7	—	35.0	49.0	—	33.3	47.3
3000 cfm	EA (wb)	58	TC	77.9	77.9	87.8	75.0	75.0	84.6	71.9	71.9	81.0	68.4	68.4	77.1	64.7	64.7	72.9
			SHC	68.0	77.9	87.8	65.5	75.0	84.6	62.7	71.9	81.0	59.7	68.4	77.1	56.4	64.7	72.9
		62	TC	78.0	78.0	91.2	75.1	75.1	87.8	71.9	71.9	84.1	68.5	68.5	80.1	64.7	64.7	75.7
			SHC	64.8	78.0	91.2	62.3	75.1	87.8	59.7	71.9	84.1	56.9	68.5	80.1	53.7	64.7	75.7
		67	TC	82.7	82.7	83.8	79.0	79.0	82.3	75.0	75.0	80.6	70.7	70.7	78.8	66.1	66.1	76.7
			SHC	53.2	68.5	83.8	51.8	67.0	82.3	50.2	65.4	80.6	48.5	63.6	78.8	46.6	61.7	76.7
		72	TC	90.5	90.5	90.5	86.6	86.6	86.6	82.1	82.1	82.1	77.6	77.6	77.6	72.6	72.6	72.6
			SHC	37.7	53.1	68.5	36.3	51.7	67.0	34.8	50.1	65.5	33.2	48.5	63.8	31.5	46.8	62.1
		76	TC	—	97.2	97.2	—	93.0	93.0	—	88.5	88.5	—	83.6	83.6	—	78.3	78.3
			SHC	—	40.5	56.1	—	39.1	54.7	—	37.7	53.1	—	36.1	51.5	—	34.4	49.7

NOTE(S):

a. See minimum-maximum airflow ratings on page 7.

LEGEND

— — Do Not Operate
cfm — Cubic Feet Per Minute (Supply Air)
EA (db) — Entering Air Temperature (dry bulb)
EA (wb) — Entering Air Temperature (wet bulb)
SHC — Sensible Heat Capacity (1000 Btuh) Gross
TC — Total Capacity (1000 Btuh) Gross

48QE*M07 Single Stage Cooling Capacities[a]

48QE*M07				AMBIENT TEMPERATURE (°F)														
				85			95			105			115			125		
				EA (db)			EA (db)			EA (db)			EA (db)			EA (db)		
				75	80	85	75	80	85	75	80	85	75	80	85	75	80	85
1080 cfm	EA (wb)	58	TC	39.7	39.7	44.7	38.3	38.3	43.2	36.9	36.9	41.6	35.3	35.3	39.7	33.5	33.5	37.7
			SHC	34.6	39.7	44.7	33.5	38.3	43.2	32.2	36.9	41.6	30.8	35.3	39.7	29.2	33.5	37.7
		62	TC	41.8	41.8	42.4	40.1	40.1	41.6	38.2	38.2	40.6	36.1	36.1	39.6	33.9	33.9	38.4
			SHC	31.3	36.8	42.4	30.5	36.0	41.6	29.6	35.1	40.6	28.6	34.1	39.6	27.5	33.0	38.4
		67	TC	46.0	46.0	46.0	44.2	44.2	44.2	42.1	42.1	42.1	39.9	39.9	39.9	37.4	37.4	37.4
			SHC	25.9	31.5	37.1	25.1	30.7	36.3	24.3	29.8	35.4	23.3	28.9	34.4	22.3	27.9	33.4
		72	TC	50.7	50.7	50.7	48.7	48.7	48.7	46.5	46.5	46.5	44.1	44.1	44.1	41.5	41.5	41.5
			SHC	20.4	26.0	31.6	19.6	25.2	30.8	18.8	24.4	30.0	17.9	23.5	29.1	16.9	22.5	28.1
		76	TC	—	54.7	54.7	—	52.5	52.5	—	50.2	50.2	—	47.7	47.7	—	44.9	44.9
			SHC	—	21.6	27.4	—	20.8	26.6	—	20.0	25.7	—	19.1	24.8	—	18.1	23.8
1260 cfm	EA (wb)	58	TC	41.9	41.9	47.2	40.4	40.4	45.6	38.9	38.9	43.8	37.1	37.1	41.8	35.2	35.2	39.7
			SHC	36.6	41.9	47.2	35.3	40.4	45.6	33.9	38.9	43.8	32.4	37.1	41.8	30.7	35.2	39.7
		62	TC	43.1	43.1	46.4	41.4	41.4	45.5	39.4	39.4	44.5	37.3	37.3	43.1	35.3	35.3	41.2
			SHC	33.7	40.0	46.4	32.8	39.2	45.5	31.9	38.2	44.5	30.7	36.9	43.1	29.3	35.2	41.2
		67	TC	47.4	47.4	47.4	45.5	45.5	45.5	43.3	43.3	43.3	41.0	41.0	41.0	38.4	38.4	38.4
			SHC	27.5	33.9	40.3	26.7	33.1	39.5	25.8	32.2	38.6	24.8	31.2	37.6	23.8	30.2	36.6
		72	TC	52.2	52.2	52.2	50.0	50.0	50.0	47.7	47.7	47.7	45.2	45.2	45.2	42.5	42.5	42.5
			SHC	21.1	27.6	34.0	20.3	26.8	33.2	19.4	25.9	32.3	18.5	25.0	31.4	17.5	24.0	30.4
		76	TC	—	56.2	56.2	—	54.0	54.0	—	51.5	51.5	—	48.9	48.9	—	46.0	46.0
			SHC	—	22.4	29.1	—	21.6	28.3	—	20.8	27.4	—	19.9	26.4	—	18.9	25.4
1440 cfm	EA (wb)	58	TC	43.7	43.7	49.3	42.2	42.2	47.6	40.5	40.5	45.7	38.7	38.7	43.6	36.7	36.7	41.3
			SHC	38.2	43.7	49.3	36.9	42.2	47.6	35.4	40.5	45.7	33.8	38.7	43.6	32.0	36.7	41.3
		62	TC	44.3	44.3	50.0	42.5	42.5	49.0	40.6	40.6	47.4	38.7	38.7	45.3	36.7	36.7	42.9
			SHC	35.9	42.9	50.0	34.9	41.9	49.0	33.7	40.5	47.4	32.2	38.7	45.3	30.5	36.7	42.9
		67	TC	48.5	48.5	48.5	46.5	46.5	46.5	44.2	44.2	44.2	41.8	41.8	41.8	39.1	39.1	39.7
			SHC	29.0	36.2	43.5	28.1	35.4	42.6	27.2	34.5	41.7	26.3	33.5	40.7	25.2	32.4	39.7
		72	TC	53.3	53.3	53.3	51.1	51.1	51.1	48.7	48.7	48.7	46.1	46.1	46.1	43.3	43.3	43.3
			SHC	21.7	29.0	36.3	20.9	28.2	35.5	20.1	27.3	34.6	19.1	26.4	33.6	18.1	25.4	32.6
		76	TC	—	57.4	57.4	—	55.1	55.1	—	52.5	52.5	—	49.8	49.8	—	46.8	46.8
			SHC	—	23.2	30.7	—	22.4	29.9	—	21.5	29.0	—	20.6	28.0	—	19.6	27.0
1620 cfm	EA (wb)	58	TC	45.3	45.3	51.1	43.7	43.7	49.3	42.0	42.0	47.3	40.0	40.0	45.1	37.9	37.9	42.7
			SHC	39.6	45.3	51.1	38.2	43.7	49.3	36.6	42.0	47.3	34.9	40.0	45.1	33.1	37.9	42.7
		62	TC	45.4	45.4	53.1	43.8	43.8	51.2	42.0	42.0	49.1	40.1	40.1	46.9	38.0	38.0	44.4
			SHC	37.7	45.4	53.1	36.3	43.8	51.2	34.9	42.0	49.1	33.3	40.1	46.9	31.5	38.0	44.4
		67	TC	49.4	49.4	49.4	47.3	47.3	47.3	44.9	44.9	44.9	42.4	42.4	43.7	39.7	39.7	42.6
			SHC	30.4	38.4	46.5	29.5	37.6	45.7	28.6	36.7	44.7	27.6	35.7	43.7	26.6	34.6	42.6
		72	TC	54.2	54.2	54.2	52.0	52.0	52.0	49.5	49.5	49.5	46.8	46.8	46.8	43.9	43.9	43.9
			SHC	22.3	30.4	38.5	21.5	29.6	37.7	20.6	28.7	36.8	19.7	27.7	35.8	18.6	26.7	34.8
		76	TC	—	58.4	58.4	—	56.0	56.0	—	53.4	53.4	—	50.5	50.5	—	47.5	47.5
			SHC	—	23.9	32.2	—	23.1	31.4	—	22.2	30.5	—	21.3	29.5	—	20.3	28.5
1800 cfm	EA (wb)	58	TC	46.7	46.7	52.6	45.0	45.0	50.7	43.2	43.2	48.7	41.2	41.2	46.4	39.0	39.0	43.9
			SHC	40.8	46.7	52.6	39.3	45.0	50.7	37.7	43.2	48.7	36.0	41.2	46.4	34.0	39.0	43.9
		62	TC	46.7	46.7	54.7	45.1	45.1	52.7	43.2	43.2	50.6	41.2	41.2	48.2	39.0	39.0	45.6
			SHC	38.8	46.7	54.7	37.4	45.1	52.7	35.9	43.2	50.6	34.2	41.2	48.2	32.4	39.0	45.6
		67	TC	50.1	50.1	50.1	47.9	47.9	48.6	45.5	45.5	47.6	43.0	43.0	46.5	40.2	40.2	45.3
			SHC	31.7	40.6	49.5	30.9	39.7	48.6	29.9	38.8	47.6	28.9	37.7	46.5	27.8	36.6	45.3
		72	TC	55.0	55.0	55.0	52.6	52.6	52.6	50.1	50.1	50.1	47.4	47.4	47.4	44.4	44.4	44.4
			SHC	22.9	31.8	40.7	22.0	30.9	39.8	21.2	30.0	38.9	20.2	29.1	37.9	19.2	28.0	36.9
		76	TC	—	59.2	59.2	—	56.7	56.7	—	54.0	54.0	—	51.1	51.1	—	48.0	48.0
			SHC	—	24.6	33.6	—	23.8	32.8	—	22.9	31.9	—	22.0	31.0	—	21.0	29.9

NOTE(S):

a. See minimum-maximum airflow ratings on page 7.

LEGEND

— — Do Not Operate
cfm — Cubic Feet Per Minute (Supply Air)
EA (db) — Entering Air Temperature (dry bulb)
EA (wb) — Entering Air Temperature (wet bulb)
SHC — Sensible Heat Capacity (1000 Btuh) Gross
TC — Total Capacity (1000 Btuh) Gross

48QE*M08 Two Stage Cooling Capacities[a]

48QE*M08				AMBIENT TEMPERATURE (°F)														
				85			95			105			115			125		
				EA (db)			EA (db)			EA (db)			EA (db)			EA (db)		
				75	80	85	75	80	85	75	80	85	75	80	85	75	80	85
2250 cfm	EA (wb)	58	TC	87.4	87.4	100.0	84.4	84.4	96.5	81.0	81.0	92.7	77.3	77.3	88.4	73.3	73.3	83.8
			SHC	74.8	87.4	100.0	72.2	84.4	96.5	69.4	81.0	92.7	66.2	77.3	88.4	62.7	73.3	83.8
		62	TC	91.6	91.6	95.1	87.7	87.7	93.3	83.4	83.4	91.3	78.7	78.7	89.1	73.7	73.7	86.7
			SHC	67.3	81.2	95.1	65.4	79.4	93.3	63.4	77.4	91.3	61.3	75.2	89.1	59.0	72.8	86.7
		67	TC	100.5	100.5	100.5	96.2	96.2	96.2	91.6	91.6	91.6	86.5	86.5	86.5	81.0	81.0	81.0
			SHC	55.0	68.9	82.9	53.2	67.1	81.1	51.2	65.2	79.1	49.1	63.1	77.0	46.9	60.8	74.8
		72	TC	110.2	110.2	110.2	105.5	105.5	105.5	100.5	100.5	100.5	95.0	95.0	95.0	89.2	89.2	89.2
			SHC	42.4	56.5	70.5	40.6	54.7	68.7	38.7	52.8	66.8	36.7	50.7	64.7	34.5	48.5	62.6
		76	TC	—	118.5	118.5	—	113.6	113.6	—	108.2	108.2	—	102.3	102.3	—	96.2	96.2
			SHC	—	46.2	60.3	—	44.5	58.5	—	42.6	56.6	—	40.5	54.6	—	38.4	52.5
2650 cfm	EA (wb)	58	TC	92.8	92.8	106.1	89.4	89.4	102.3	85.8	85.8	98.1	81.7	81.7	93.5	77.4	77.4	88.5
			SHC	79.4	92.8	106.1	76.6	89.4	102.3	73.5	85.8	98.1	70.0	81.7	93.5	66.3	77.4	88.5
		62	TC	94.8	94.8	105.7	90.7	90.7	103.8	86.2	86.2	101.5	81.9	81.9	97.6	77.5	77.5	92.4
			SHC	73.1	89.4	105.7	71.2	87.5	103.8	69.1	85.3	101.5	66.1	81.9	97.6	62.6	77.5	92.4
		67	TC	103.6	103.6	103.6	99.1	99.1	99.1	94.2	94.2	94.2	88.8	88.8	88.8	83.1	83.1	83.1
			SHC	58.5	74.9	91.3	56.7	73.1	89.5	54.7	71.1	87.5	52.5	68.9	85.3	50.3	66.7	83.1
		72	TC	113.4	113.4	113.4	108.6	108.6	108.6	103.2	103.2	103.2	97.4	97.4	97.4	91.4	91.4	91.4
			SHC	43.7	60.2	76.7	41.9	58.4	74.8	39.9	56.4	72.9	37.8	54.3	70.8	35.6	52.1	68.6
		76	TC	—	121.9	121.9	—	116.7	116.7	—	111.0	111.0	—	104.9	104.9	—	—	—
			SHC	—	48.1	64.6	—	46.3	62.8	—	44.4	60.9	—	42.3	58.8	—	—	—
3000 cfm	EA (wb)	58	TC	96.7	96.7	110.6	93.2	93.2	106.6	89.2	89.2	102.1	85.0	85.0	97.2	80.4	80.4	92.0
			SHC	82.8	96.7	110.6	79.8	93.2	106.6	76.4	89.2	102.1	72.7	85.0	97.2	68.8	80.4	92.0
		62	TC	98.4	98.4	109.9	93.3	93.3	111.2	89.3	89.3	106.5	85.1	85.1	101.4	80.7	80.7	95.1
			SHC	75.9	92.9	109.9	75.3	93.3	111.2	72.2	89.3	106.5	68.7	85.1	101.4	64.7	79.9	95.1
		67	TC	105.8	105.8	105.8	101.0	101.0	101.0	95.9	95.9	95.9	90.4	90.4	92.5	84.5	84.5	90.2
			SHC	61.4	80.0	98.6	59.6	78.1	96.7	57.5	76.1	94.6	55.4	73.9	92.5	53.2	71.7	90.2
		72	TC	115.6	115.6	115.6	110.5	110.5	110.5	105.0	105.0	105.0	99.0	99.0	99.0	92.8	92.8	92.8
			SHC	44.6	63.3	82.0	42.8	61.4	80.1	40.8	59.4	78.1	38.7	57.3	75.9	36.5	55.1	73.7
		76	TC	—	124.1	124.1	—	118.7	118.7	—	112.9	112.9	—	106.5	106.5	—	—	—
			SHC	—	49.6	68.3	—	47.8	66.5	—	45.8	64.5	—	43.7	62.4	—	—	—
3400 cfm	EA (wb)	58	TC	100.4	100.4	114.9	96.7	96.7	110.6	92.6	92.6	105.9	88.1	88.1	100.7	83.2	83.2	95.2
			SHC	86.0	100.4	114.9	82.8	96.7	110.6	79.3	92.6	105.9	75.4	88.1	100.7	71.3	83.2	95.2
		62	TC	100.6	100.6	119.9	96.8	96.8	115.4	92.7	92.7	110.5	88.1	88.1	105.1	83.3	83.3	99.3
			SHC	81.3	100.6	119.9	78.2	96.8	115.4	74.9	92.7	110.5	71.2	88.1	105.1	67.3	83.3	99.3
		67	TC	107.6	107.6	107.6	102.7	102.7	104.7	97.5	97.5	102.6	91.8	91.8	100.4	85.8	85.8	98.1
			SHC	64.7	85.7	106.6	62.8	83.7	104.7	60.8	81.7	102.6	58.6	79.5	100.4	56.4	77.3	98.1
		72	TC	117.5	117.5	117.5	112.3	112.3	112.3	106.6	106.6	106.6	100.4	100.4	100.4	94.0	94.0	94.0
			SHC	45.5	66.6	87.7	43.7	64.8	85.8	41.7	62.8	83.8	39.6	60.6	81.7	37.4	58.4	79.5
		76	TC	—	126.1	126.1	—	120.6	120.6	—	114.5	114.5	—	108.0	108.0	—	—	—
			SHC	—	51.1	72.3	—	49.3	70.5	—	47.4	68.5	—	45.2	66.4	—	—	—
3750 cfm	EA (wb)	58	TC	103.3	103.3	118.1	99.4	99.4	113.7	95.1	95.1	108.8	90.4	90.4	103.4	85.4	85.4	97.7
			SHC	88.4	103.3	118.1	85.1	99.4	113.7	81.4	95.1	108.8	77.4	90.4	103.4	73.1	85.4	97.7
		62	TC	103.4	103.4	123.2	99.5	99.5	118.6	95.2	95.2	113.4	90.4	90.4	107.8	85.5	85.5	101.9
			SHC	83.5	103.4	123.2	80.4	99.5	118.6	76.9	95.2	113.4	73.1	90.4	107.8	69.0	85.4	101.9
		67	TC	109.0	109.0	113.6	103.9	103.9	111.6	98.6	98.6	109.5	92.8	92.8	107.3	86.8	86.8	104.9
			SHC	67.5	90.5	113.6	65.6	88.6	111.6	63.6	86.6	109.5	61.4	84.3	107.3	59.2	82.0	104.9
		72	TC	118.9	118.9	118.9	113.5	113.5	113.5	107.7	107.7	107.7	101.4	101.4	101.4	94.9	94.9	94.9
			SHC	46.2	69.4	92.6	44.4	67.6	90.8	42.4	65.6	88.8	40.3	63.5	86.6	38.1	61.3	84.4
		76	TC	—	127.5	127.5	—	121.8	121.8	—	115.7	115.7	—	109.0	109.0	—	—	—
			SHC	—	52.3	75.7	—	50.5	73.8	—	48.5	71.8	—	46.4	69.7	—	—	—

NOTE(S):

a. See minimum-maximum airflow ratings on page 7.

LEGEND

— — Do Not Operate
cfm — Cubic Feet Per Minute (Supply Air)
EA (db) — Entering Air Temperature (dry bulb)
EA (wb) — Entering Air Temperature (wet bulb)
SHC — Sensible Heat Capacity (1000 Btuh) Gross
TC — Total Capacity (1000 Btuh) Gross

48QE*M08 Single Stage Cooling Capacities[a]

48QE*M08				AMBIENT TEMPERATURE (°F)														
				85			95			105			115			125		
				EA (db)			EA (db)			EA (db)			EA (db)			EA (db)		
				75	80	85	75	80	85	75	80	85	75	80	85	75	80	85
1350 cfm	EA (wb)	58	TC	54.3	54.3	60.9	52.3	52.3	58.7	50.2	50.2	56.3	47.8	47.8	53.7	45.2	45.2	50.8
			SHC	47.7	54.3	60.9	45.9	52.3	58.7	44.0	50.2	56.3	41.9	47.8	53.7	39.6	45.2	50.8
		62	TC	57.8	57.8	57.8	55.3	55.3	55.4	52.5	52.5	54.0	49.5	49.5	52.5	46.2	46.2	50.9
			SHC	42.8	49.8	56.7	41.4	48.4	55.4	40.0	47.0	54.0	38.5	45.5	52.5	36.9	43.9	50.9
		67	TC	63.8	63.8	63.8	61.1	61.1	61.1	58.1	58.1	58.1	54.9	54.9	54.9	51.3	51.3	51.3
			SHC	35.7	42.7	49.7	34.3	41.4	48.4	33.0	40.0	47.0	31.5	38.5	45.5	29.9	36.9	43.9
		72	TC	70.4	70.4	70.4	67.4	67.4	67.4	64.2	64.2	64.2	60.8	60.8	60.8	57.0	57.0	57.0
			SHC	28.4	35.4	42.4	27.1	34.1	41.1	25.7	32.7	39.7	24.3	31.3	38.3	22.7	29.7	36.7
		76	TC	—	76.1	76.1	—	72.8	72.8	—	69.5	69.5	—	65.8	65.8	—	61.8	61.8
			SHC	—	29.5	36.5	—	28.2	35.2	—	26.8	33.8	—	25.4	32.4	—	23.9	30.9
1590 cfm	EA (wb)	58	TC	58.0	58.0	65.0	55.8	55.8	62.7	53.5	53.5	60.1	51.0	51.0	57.2	48.1	48.1	54.1
			SHC	50.9	58.0	65.0	49.0	55.8	62.7	47.0	53.5	60.1	44.7	51.0	57.2	42.2	48.1	54.1
		62	TC	60.1	60.1	63.1	57.4	57.4	61.8	54.5	54.5	60.3	51.3	51.3	58.7	48.2	48.2	56.2
			SHC	46.7	54.9	63.1	45.3	53.5	61.8	43.9	52.1	60.3	42.3	50.5	58.7	40.2	48.2	56.2
		67	TC	66.2	66.2	66.2	63.3	63.3	63.3	60.1	60.1	60.1	56.7	56.7	56.7	53.0	53.0	53.0
			SHC	38.2	46.4	54.7	36.9	45.1	53.3	35.4	43.7	51.9	33.9	42.2	50.4	32.3	40.5	48.8
		72	TC	72.9	72.9	72.9	69.7	69.7	69.7	66.3	66.3	66.3	62.7	62.7	62.7	58.7	58.7	58.7
			SHC	29.6	37.8	46.1	28.2	36.5	44.7	26.8	35.1	43.3	25.4	33.6	41.9	23.8	32.0	40.3
		76	TC	—	78.7	78.7	—	75.3	75.3	—	71.7	71.7	—	67.8	67.8	—	63.6	63.6
			SHC	—	30.8	39.1	—	29.5	37.7	—	28.1	36.3	—	26.6	34.9	—	25.1	33.3
1800 cfm	EA (wb)	58	TC	60.7	60.7	68.1	58.5	58.5	65.6	56.0	56.0	62.8	53.3	53.3	59.8	50.3	50.3	56.5
			SHC	53.3	60.7	68.1	51.3	58.5	65.6	49.1	56.0	62.8	46.7	53.3	59.8	44.1	50.3	56.5
		62	TC	61.7	61.7	68.5	58.9	58.9	67.1	55.8	55.8	65.2	53.3	53.3	62.1	50.4	50.4	58.7
			SHC	50.0	59.2	68.5	48.6	57.9	67.1	46.5	55.8	65.2	44.6	53.3	62.1	42.0	50.4	58.7
		67	TC	67.8	67.8	67.8	64.7	64.7	64.7	61.5	61.5	61.5	57.9	57.9	57.9	54.1	54.1	54.1
			SHC	40.3	49.6	59.0	38.9	48.3	57.6	37.5	46.8	56.2	36.0	45.3	54.6	34.3	43.6	53.0
		72	TC	74.6	74.6	74.6	71.2	71.2	71.2	67.7	67.7	67.7	63.9	63.9	63.9	59.8	59.8	59.8
			SHC	30.5	39.9	49.2	29.1	38.5	47.8	27.7	37.1	46.4	26.2	35.6	44.9	24.6	34.0	43.3
		76	TC	—	80.4	80.4	—	76.8	76.8	—	73.1	73.1	—	69.1	69.1	—	64.8	64.8
			SHC	—	31.9	41.2	—	30.5	39.9	—	29.1	38.5	—	27.6	37.0	—	26.1	35.4
2040 cfm	EA (wb)	58	TC	63.4	63.4	71.1	61.1	61.1	68.5	58.4	58.4	65.5	55.5	55.5	62.3	52.4	52.4	58.8
			SHC	55.7	63.4	71.1	53.6	61.1	68.5	51.3	58.4	65.5	48.7	55.5	62.3	45.9	52.4	58.8
		62	TC	63.4	63.4	73.7	61.1	61.1	71.0	58.5	58.5	68.0	54.7	54.7	64.3	52.4	52.4	61.1
			SHC	53.0	63.4	73.7	51.2	61.1	71.0	48.9	58.5	68.0	45.1	54.7	64.3	43.8	52.4	61.1
		67	TC	69.2	69.2	69.2	66.1	66.1	66.1	62.7	62.7	62.7	59.0	59.0	59.3	55.0	55.0	57.7
			SHC	42.7	53.2	63.7	41.3	51.8	62.3	39.8	50.3	60.9	38.3	48.8	59.3	36.6	47.1	57.7
		72	TC	76.1	76.1	76.1	72.6	72.6	72.6	69.0	69.0	69.0	65.1	65.1	65.1	60.8	60.8	60.8
			SHC	31.5	42.1	52.7	30.1	40.7	51.3	28.7	39.3	49.9	27.2	37.7	48.3	25.6	36.2	46.8
		76	TC	—	81.9	81.9	—	78.2	78.2	—	74.4	74.4	—	70.3	70.3	—	65.8	65.8
			SHC	—	33.0	43.6	—	31.6	42.2	—	30.2	40.8	—	28.7	39.3	—	27.1	37.7
2250 cfm	EA (wb)	58	TC	65.5	65.5	73.5	63.0	63.0	70.7	60.2	60.2	67.5	57.2	57.2	64.2	53.9	53.9	60.6
			SHC	57.6	65.5	73.5	55.4	63.0	70.7	52.8	60.2	67.5	50.2	57.2	64.2	47.3	53.9	60.6
		62	TC	65.5	65.5	76.1	63.1	63.1	73.4	60.3	60.3	70.1	57.3	57.3	66.7	54.0	54.0	62.9
			SHC	54.9	65.5	76.1	52.9	63.1	73.4	50.4	60.3	70.1	47.9	57.3	66.7	45.1	54.0	62.9
		67	TC	70.3	70.3	70.3	67.0	67.0	67.0	63.5	63.5	65.0	59.7	59.7	63.4	55.8	55.8	61.7
			SHC	44.6	56.3	67.9	43.2	54.8	66.5	41.8	53.4	65.0	40.2	51.8	63.4	38.6	50.1	61.7
		72	TC	77.1	77.1	77.1	73.6	73.6	73.6	69.9	69.9	69.9	65.8	65.8	65.8	61.5	61.5	61.5
			SHC	32.3	43.9	55.6	30.9	42.6	54.3	29.4	41.1	52.8	27.9	39.6	51.3	26.3	38.0	49.6
		76	TC	—	83.0	83.0	—	79.2	79.2	—	75.3	75.3	—	71.1	71.1	—	66.5	66.5
			SHC	—	33.9	45.6	—	32.5	44.2	—	31.1	42.8	—	29.6	41.3	—	28.0	39.7

NOTE(S):

a. See minimum-maximum airflow ratings on page 7.

LEGEND

— — Do Not Operate
cfm — Cubic Feet Per Minute (Supply Air)
EA (db) — Entering Air Temperature (dry bulb)
EA (wb) — Entering Air Temperature (wet bulb)
SHC — Sensible Heat Capacity (1000 Btuh) Gross
TC — Total Capacity (1000 Btuh) Gross

48QE*M09 Two Stage Cooling Capacities[a]

48QE*M09				AMBIENT TEMPERATURE (°F)														
				85			95			105			115			125		
				EA (db)			EA (db)			EA (db)			EA (db)			EA (db)		
				75	80	85	75	80	85	75	80	85	75	80	85	75	80	85
2550 cfm	EA (wb)	58	TC	90.7	90.7	103.3	86.2	86.2	98.4	81.4	81.4	93.1	76.3	76.3	87.5	70.8	70.8	81.4
			SHC	78.1	90.7	103.3	74.0	86.2	98.4	69.7	81.4	93.1	65.1	76.3	87.5	60.2	70.8	81.4
		62	TC	96.0	96.0	97.6	90.5	90.5	94.3	84.6	84.6	90.9	78.4	78.4	87.2	71.8	71.8	83.3
			SHC	70.1	83.8	97.6	66.8	80.6	94.3	63.3	77.1	90.9	59.8	73.5	87.2	56.0	69.6	83.3
		67	TC	106.5	106.5	106.5	100.6	100.6	100.6	94.4	94.4	94.4	87.6	87.6	87.6	80.4	80.4	80.4
			SHC	57.4	71.2	85.1	54.1	68.0	81.8	50.7	64.6	78.4	47.2	61.0	74.9	43.5	57.3	71.1
		72	TC	118.1	118.1	118.1	111.8	111.8	111.8	105.1	105.1	105.1	97.9	97.9	97.9	90.2	90.2	90.2
			SHC	44.5	58.4	72.4	41.3	55.2	69.1	37.9	51.8	65.7	34.3	48.3	62.2	30.7	44.6	58.5
		76	TC	—	128.1	128.1	—	121.5	121.5	—	114.3	114.3	—	106.7	106.7	—	98.5	98.5
			SHC	—	47.9	62.0	—	44.7	58.7	—	41.3	55.4	—	37.8	51.9	—	34.2	48.2
3000 cfm	EA (wb)	58	TC	96.9	96.9	110.3	92.1	92.1	105.0	87.0	87.0	99.4	81.5	81.5	93.3	75.6	75.6	86.8
			SHC	83.6	96.9	110.3	79.2	92.1	105.0	74.6	87.0	99.4	69.7	81.5	93.3	64.4	75.6	86.8
		62	TC	99.8	99.8	108.8	94.1	94.1	105.4	88.0	88.0	101.6	82.2	82.2	95.7	75.7	75.7	90.7
			SHC	76.7	92.8	108.8	73.3	89.4	105.4	69.7	85.7	101.6	65.1	80.4	95.7	60.8	75.7	90.7
		67	TC	110.3	110.3	110.3	104.1	104.1	104.1	97.5	97.5	97.5	90.4	90.4	90.4	82.9	82.9	82.9
			SHC	61.7	77.9	94.1	58.4	74.6	90.8	54.9	71.1	87.3	51.3	67.5	83.7	47.5	63.7	79.9
		72	TC	122.2	122.2	122.2	115.5	115.5	115.5	108.4	108.4	108.4	100.9	100.9	100.9	92.8	92.8	92.8
			SHC	46.4	62.7	79.0	43.1	59.4	75.7	39.6	55.9	72.2	36.0	52.3	68.6	32.3	48.6	64.8
		76	TC	—	132.3	132.3	—	125.2	125.2	—	117.7	117.7	—	109.7	109.7	—	101.2	101.2
			SHC	—	50.3	66.8	—	47.1	63.6	—	43.6	60.1	—	40.0	56.4	—	36.2	52.7
3400 cfm	EA (wb)	58	TC	101.5	101.5	115.4	96.5	96.5	109.9	91.1	91.1	104.0	85.4	85.4	97.6	79.2	79.2	90.8
			SHC	87.6	101.5	115.4	83.1	96.5	109.9	78.2	91.1	104.0	73.1	85.4	97.6	67.5	79.2	90.8
		62	TC	102.6	102.6	118.1	97.5	97.5	112.2	91.2	91.2	108.4	85.5	85.5	101.9	79.3	79.3	94.8
			SHC	82.2	100.1	118.1	77.7	94.9	112.2	74.0	91.2	108.4	69.1	85.5	101.9	63.7	79.3	94.8
		67	TC	112.9	112.9	112.9	106.5	106.5	106.5	99.7	99.7	99.7	92.4	92.4	92.4	84.6	84.6	87.4
			SHC	65.3	83.6	101.9	61.9	80.2	98.5	58.4	76.7	94.9	54.8	73.0	91.3	51.0	69.2	87.4
		72	TC	124.9	124.9	124.9	118.0	118.0	118.0	110.7	110.7	110.7	102.9	102.9	102.9	94.5	94.5	94.5
			SHC	47.9	66.2	84.6	44.5	62.9	81.3	41.0	59.4	77.7	37.4	55.7	74.1	33.6	51.9	70.2
		76	TC	—	135.0	135.0	—	127.8	127.8	—	120.0	120.0	—	111.8	111.8	—	103.0	103.0
			SHC	—	52.2	70.8	—	48.8	67.4	—	45.3	63.8	—	41.7	60.2	—	37.9	56.3
3850 cfm	EA (wb)	58	TC	106.0	106.0	120.4	100.7	100.7	114.6	95.1	95.1	108.4	89.0	89.0	101.7	82.5	82.5	94.5
			SHC	91.5	106.0	120.4	86.8	100.7	114.6	81.7	95.1	108.4	76.3	89.0	101.7	70.5	82.5	94.5
		62	TC	108.0	108.0	118.8	100.8	100.8	119.4	95.2	95.2	113.0	89.1	89.1	106.1	82.6	82.6	98.7
			SHC	83.8	101.3	118.8	82.2	100.8	119.4	77.3	95.2	113.0	72.1	89.1	106.1	66.5	82.6	98.7
		67	TC	115.2	115.2	115.2	108.6	108.6	108.6	101.6	101.6	103.3	94.2	94.2	99.6	86.2	86.2	95.6
			SHC	69.2	89.8	110.3	65.8	86.3	106.9	62.2	82.8	103.3	58.6	79.1	99.6	54.7	75.1	95.6
		72	TC	127.3	127.3	127.3	120.2	120.2	120.2	112.7	112.7	112.7	104.6	104.6	104.6	96.1	96.1	96.1
			SHC	49.3	70.0	90.7	45.9	66.6	87.3	42.4	63.1	83.8	38.8	59.4	80.0	34.9	55.6	76.2
		76	TC	—	137.5	137.5	—	130.0	130.0	—	122.0	122.0	—	113.5	113.5	—	104.6	104.6
			SHC	—	54.0	74.9	—	50.6	71.5	—	47.1	67.9	—	43.4	64.1	—	39.5	60.3
4250 cfm	EA (wb)	58	TC	109.4	109.4	124.3	103.9	103.9	118.2	98.1	98.1	111.8	91.8	91.8	104.9	85.1	85.1	97.4
			SHC	94.5	109.4	124.3	89.6	103.9	118.2	84.4	98.1	111.8	78.8	91.8	104.9	72.7	85.1	97.4
		62	TC	109.5	109.5	129.4	104.0	104.0	123.2	98.2	98.2	116.5	91.9	91.9	109.4	85.1	85.1	101.6
			SHC	89.7	109.5	129.4	84.9	104.0	123.2	79.9	98.2	116.5	74.5	91.9	109.4	68.7	85.1	101.6
		67	TC	116.9	116.9	117.6	110.2	110.2	114.2	103.0	103.0	110.5	95.5	95.5	106.6	87.4	87.4	102.5
			SHC	72.5	95.1	117.6	69.1	91.6	114.2	65.5	88.0	110.5	61.8	84.2	106.6	57.9	80.2	102.5
		72	TC	129.0	129.0	129.0	121.8	121.8	121.8	114.1	114.1	114.1	105.9	105.9	105.9	97.2	97.2	97.2
			SHC	50.5	73.3	96.0	47.1	69.8	92.5	43.6	66.3	88.9	39.9	62.6	85.2	36.1	58.7	81.3
		76	TC	—	139.3	139.3	—	131.6	131.6	—	123.5	123.5	—	114.8	114.8	—	105.7	105.7
			SHC	—	55.5	78.4	—	52.1	74.9	—	48.5	71.3	—	44.8	67.5	—	40.9	63.6

NOTE(S):

a. See minimum-maximum airflow ratings on page 7.

LEGEND

— — Do Not Operate
cfm — Cubic Feet Per Minute (Supply Air)
EA (db) — Entering Air Temperature (dry bulb)
EA (wb) — Entering Air Temperature (wet bulb)
SHC — Sensible Heat Capacity (1000 Btuh) Gross
TC — Total Capacity (1000 Btuh) Gross

48QE*M09 Single Stage Cooling Capacities[a]

48QE*M09				AMBIENT TEMPERATURE (°F)														
				85			95			105			115			125		
				EA (db)			EA (db)			EA (db)			EA (db)			EA (db)		
				75	80	85	75	80	85	75	80	85	75	80	85	75	80	85
1275 cfm	EA (wb)	58	TC	49.8	49.8	56.0	46.7	46.7	53.6	43.7	43.7	50.4	40.6	40.6	47.0	37.3	37.3	43.3
			SHC	42.0	49.0	56.0	39.7	46.7	53.6	37.1	43.7	50.4	34.3	40.6	47.0	31.2	37.3	43.3
		62	TC	54.5	54.5	54.5	51.0	51.0	51.0	47.4	47.4	47.4	43.5	43.5	44.4	39.3	39.3	41.8
			SHC	37.3	44.3	51.3	35.1	42.1	49.1	32.8	39.8	46.8	30.4	37.4	44.4	27.9	34.9	41.8
		67	TC	61.0	61.0	61.0	57.3	57.3	57.3	53.4	53.4	53.4	49.2	49.2	49.2	44.7	44.7	44.7
			SHC	31.3	38.3	45.3	29.1	36.1	43.1	26.8	33.8	40.8	24.4	31.4	38.4	21.9	28.9	35.8
		72	TC	68.0	68.0	68.0	64.1	64.1	64.1	59.9	59.9	59.9	55.4	55.4	55.4	50.7	50.7	50.7
			SHC	25.2	32.2	39.2	22.9	29.9	37.0	20.6	27.6	34.6	18.2	25.2	32.2	15.7	22.7	29.8
		76	TC	—	74.2	74.2	—	70.0	70.0	—	65.6	65.6	—	60.7	60.7	—	55.8	55.8
			SHC	—	27.2	34.2	—	24.9	31.9	—	22.6	29.6	—	20.2	27.2	—	17.7	24.7
1500 cfm	EA (wb)	58	TC	53.5	53.5	61.1	50.5	50.5	57.9	47.4	47.4	54.5	44.1	44.1	50.8	40.4	40.4	46.9
			SHC	45.9	53.5	61.1	43.2	50.5	57.9	40.3	47.4	54.5	37.3	44.1	50.8	34.0	40.4	46.9
		62	TC	57.2	57.2	57.5	53.5	53.5	55.2	49.7	49.7	52.8	45.6	45.6	50.3	41.2	41.2	47.7
			SHC	41.1	49.3	57.5	38.8	47.0	55.2	36.4	44.6	52.8	33.9	42.1	50.3	31.4	39.5	47.7
		67	TC	63.8	63.8	63.8	59.9	59.9	59.9	55.8	55.8	55.8	51.4	51.4	51.4	46.6	46.6	46.6
			SHC	33.8	42.0	50.3	31.5	39.8	48.0	29.2	37.4	45.6	26.7	34.9	43.2	24.1	32.3	40.6
		72	TC	71.1	71.1	71.1	66.9	66.9	66.9	62.4	62.4	62.4	57.6	57.6	57.6	52.6	52.6	52.6
			SHC	26.5	34.7	43.0	24.2	32.4	40.6	21.8	30.0	38.3	19.3	27.6	35.8	16.8	25.0	33.3
		76	TC	—	77.3	77.3	—	72.9	72.9	—	68.2	68.2	—	63.2	63.2	—	57.8	57.8
			SHC	—	28.7	36.9	—	26.4	34.7	—	24.0	32.3	—	21.6	29.9	—	19.0	27.3
1700 cfm	EA (wb)	58	TC	56.6	56.6	64.6	53.5	53.5	61.2	50.2	50.2	57.6	46.6	46.6	53.7	42.8	42.8	49.5
			SHC	48.6	56.6	64.6	45.8	53.5	61.2	42.8	50.2	57.6	39.6	46.6	53.7	36.1	42.8	49.5
		62	TC	59.0	59.0	62.8	55.3	55.3	60.4	51.3	51.3	58.0	47.1	47.1	55.4	42.9	42.9	51.9
			SHC	44.2	53.5	62.8	41.9	51.1	60.4	39.5	48.7	58.0	36.9	46.2	55.4	33.9	42.9	51.9
		67	TC	65.8	65.8	65.8	61.7	61.7	61.7	57.4	57.4	57.4	52.7	52.7	52.7	47.7	47.7	47.7
			SHC	35.9	45.2	54.5	33.6	42.9	52.2	31.2	40.5	49.8	28.6	37.9	47.2	26.0	35.3	44.6
		72	TC	73.1	73.1	73.1	68.8	68.8	68.8	64.2	64.2	64.2	59.1	59.1	59.1	53.9	53.9	53.9
			SHC	27.5	36.8	46.2	25.1	34.5	43.8	22.7	32.1	41.4	20.2	29.5	38.9	17.6	27.0	36.3
		76	TC	—	79.5	79.5	—	74.9	74.9	—	70.0	70.0	—	64.7	64.7	—	59.2	59.2
			SHC	—	29.9	39.3	—	27.6	37.0	—	25.2	34.6	—	22.7	32.0	—	20.1	29.5
1925 cfm	EA (wb)	58	TC	59.6	59.6	67.9	56.2	56.2	64.3	52.8	52.8	60.6	49.1	49.1	56.5	45.0	45.0	52.0
			SHC	51.2	59.6	67.9	48.2	56.2	64.3	45.1	52.8	60.6	41.8	49.1	56.5	38.0	45.0	52.0
		62	TC	60.8	60.8	68.5	56.9	56.9	66.1	52.9	52.9	63.3	49.0	49.0	59.0	44.3	44.3	54.2
			SHC	47.6	58.0	68.5	45.2	55.6	66.1	42.6	52.9	63.3	39.0	49.0	59.0	34.4	44.3	54.2
		67	TC	67.5	67.5	67.5	63.3	63.3	63.3	58.8	58.8	58.8	54.0	54.0	54.0	48.8	48.8	49.1
			SHC	38.1	48.6	59.2	35.7	46.3	56.8	33.3	43.8	54.3	30.7	41.2	51.7	28.0	38.6	49.1
		72	TC	75.0	75.0	75.0	70.4	70.4	70.4	65.7	65.7	65.7	60.5	60.5	60.5	55.1	55.1	55.1
			SHC	28.5	39.0	49.6	26.1	36.7	47.2	23.6	34.2	44.8	21.1	31.7	42.2	18.5	29.0	39.6
		76	TC	—	81.4	81.4	—	76.6	76.6	—	71.6	71.6	—	66.1	66.1	—	60.4	60.4
			SHC	—	31.2	41.8	—	28.8	39.4	—	26.4	37.0	—	23.8	34.4	—	21.2	31.8
2125 cfm	EA (wb)	58	TC	61.9	61.9	70.6	58.5	58.5	66.8	54.9	54.9	62.8	51.0	51.0	58.6	46.8	46.8	54.0
			SHC	53.3	61.9	70.6	50.2	58.5	66.8	46.9	54.9	62.8	43.4	51.0	58.6	39.6	46.8	54.0
		62	TC	62.2	62.2	73.3	58.6	58.6	69.7	55.0	55.0	65.6	51.1	51.1	61.2	46.9	46.9	56.5
			SHC	50.4	61.8	73.3	47.5	58.6	69.7	44.3	55.0	65.6	40.9	51.1	61.2	37.3	46.9	56.5
		67	TC	68.8	68.8	68.8	64.4	64.4	64.4	59.8	59.8	59.8	54.9	54.9	55.7	49.8	49.8	53.0
			SHC	40.0	51.6	63.2	37.6	49.2	60.8	35.1	46.7	58.3	32.5	44.1	55.7	29.9	41.5	53.0
		72	TC	76.3	76.3	76.3	71.7	71.7	71.7	66.7	66.7	66.7	61.4	61.4	61.4	55.9	55.9	55.9
			SHC	29.3	40.9	52.6	26.9	38.5	50.2	24.4	36.1	47.7	21.8	33.5	45.1	19.2	30.8	42.5
		76	TC	—	82.8	82.8	—	77.9	77.9	—	72.6	72.6	—	67.0	67.0	—	61.3	61.3
			SHC	—	32.2	43.9	—	29.8	41.5	—	27.4	39.0	—	24.8	36.5	—	22.2	33.9

NOTE(S):

a. See minimum-maximum airflow ratings on page 7.

LEGEND

— — Do Not Operate
cfm — Cubic Feet Per Minute (Supply Air)
EA (db) — Entering Air Temperature (dry bulb)
EA (wb) — Entering Air Temperature (wet bulb)
SHC — Sensible Heat Capacity (1000 Btuh) Gross
TC — Total Capacity (1000 Btuh) Gross

48QE*M12 Two Stage Cooling Capacities[a]

48QE*M12				AMBIENT TEMPERATURE (°F)														
				85			95			105			115			125		
				EA (db)			EA (db)			EA (db)			EA (db)			EA (db)		
				75	80	85	75	80	85	75	80	85	75	80	85	75	80	85
3000 cfm	EA (wb)	58	TC	105.6	105.6	120.3	99.4	99.4	113.6	92.8	92.8	106.5	85.8	85.8	98.9	78.4	78.4	90.9
			SHC	90.9	105.6	120.3	85.1	99.4	113.6	79.1	92.8	106.5	72.8	85.8	98.9	66.0	78.4	90.9
		62	TC	112.2	112.2	113.5	104.7	104.7	108.6	96.8	96.8	103.6	88.5	88.5	98.3	79.7	79.7	92.8
			SHC	81.2	97.3	113.5	76.4	92.5	108.6	71.4	87.5	103.6	66.3	82.3	98.3	60.9	76.9	92.8
		67	TC	125.1	125.1	125.1	117.2	117.2	117.2	108.7	108.7	108.7	99.8	99.8	99.8	90.3	90.3	90.3
			SHC	66.1	82.3	98.5	61.3	77.5	93.6	56.3	72.5	88.6	51.2	67.3	83.5	45.9	62.0	78.2
		72	TC	139.2	139.2	139.2	130.6	130.6	130.6	121.6	121.6	121.6	112.1	112.1	112.1	102.1	102.1	102.1
			SHC	50.7	67.0	83.3	45.9	62.1	78.4	40.9	57.2	73.4	35.8	52.0	68.3	30.5	46.7	62.9
		76	TC	—	151.0	151.0	—	142.1	142.1	—	132.4	132.4	—	122.5	122.5	—	112.0	112.0
			SHC	—	54.5	71.0	—	49.7	66.2	—	44.7	61.2	—	39.6	56.1	—	34.3	50.8
3500 cfm	EA (wb)	58	TC	112.8	112.8	128.4	106.2	106.2	121.2	99.2	99.2	113.6	91.8	91.8	105.6	84.0	84.0	97.0
			SHC	97.3	112.8	128.4	91.2	106.2	121.2	84.8	99.2	113.6	78.1	91.8	105.6	70.9	84.0	97.0
		62	TC	116.6	116.6	126.2	108.8	108.8	121.1	100.7	100.7	115.8	92.3	92.3	109.8	84.1	84.1	101.5
			SHC	89.0	107.6	126.2	84.0	102.6	121.1	78.9	97.3	115.8	73.3	91.5	109.8	66.7	84.1	101.5
		67	TC	129.5	129.5	129.5	121.1	121.1	121.1	112.3	112.3	112.3	102.9	102.9	102.9	93.1	93.1	93.1
			SHC	71.3	90.1	108.8	66.4	85.2	103.9	61.3	80.1	98.8	56.1	74.9	93.6	50.7	69.4	88.2
		72	TC	143.6	143.6	143.6	134.7	134.7	134.7	125.2	125.2	125.2	115.4	115.4	115.4	104.9	104.9	104.9
			SHC	53.3	72.1	91.0	48.4	67.2	86.1	43.3	62.1	80.9	38.1	56.9	75.7	32.7	51.5	70.3
		76	TC	—	155.5	155.5	—	146.3	146.3	—	136.5	136.5	—	125.9	125.9	—	115.0	115.0
			SHC	—	57.6	76.8	—	52.7	71.9	—	47.6	66.7	—	42.3	61.4	—	37.0	56.0
4000 cfm	EA (wb)	58	TC	118.9	118.9	135.1	111.9	111.9	127.5	104.6	104.6	119.6	96.8	96.8	111.1	88.5	88.5	102.1
			SHC	102.6	118.9	135.1	96.3	111.9	127.5	89.5	104.6	119.6	82.5	96.8	111.1	75.0	88.5	102.1
		62	TC	120.3	120.3	137.9	113.7	113.7	128.3	104.7	104.7	124.8	96.9	96.9	116.1	88.6	88.6	106.8
			SHC	96.1	117.0	137.9	89.0	108.7	128.3	84.6	104.7	124.8	77.8	96.9	116.1	70.5	88.6	106.8
		67	TC	132.8	132.8	132.8	124.1	124.1	124.1	115.0	115.0	115.0	105.4	105.4	105.4	95.2	95.2	97.7
			SHC	76.2	97.5	118.8	71.2	92.5	113.8	66.1	87.3	108.6	60.8	82.0	103.3	55.3	76.5	97.7
		72	TC	147.0	147.0	147.0	137.8	137.8	137.8	128.0	128.0	128.0	117.8	117.8	117.8	107.1	107.1	107.1
			SHC	55.5	76.9	98.4	50.6	72.0	93.4	45.4	66.8	88.2	40.2	61.5	82.9	34.7	56.1	77.4
		76	TC	—	159.0	159.0	—	149.4	149.4	—	139.3	139.3	—	128.5	128.5	—	117.2	117.2
			SHC	—	60.3	82.0	—	55.3	77.0	—	50.2	71.9	—	44.9	66.4	—	39.5	61.0
4500 cfm	EA (wb)	58	TC	124.0	124.0	140.8	116.7	116.7	132.9	109.1	109.1	124.6	101.0	101.0	115.7	92.3	92.3	106.3
			SHC	107.2	124.0	140.8	100.5	116.7	132.9	93.5	109.1	124.6	86.2	101.0	115.7	78.4	92.3	106.3
		62	TC	126.7	126.7	136.8	116.9	116.9	138.5	109.2	109.2	129.9	101.1	101.1	120.8	92.5	92.5	111.2
			SHC	97.1	117.0	136.8	95.2	116.9	138.5	88.5	109.2	129.9	81.3	101.1	120.8	73.8	92.5	111.2
		67	TC	135.4	135.4	135.4	126.5	126.5	126.5	117.2	117.2	118.1	107.4	107.4	112.6	97.0	97.0	106.9
			SHC	80.9	104.7	128.5	75.8	99.6	123.4	70.6	94.4	118.1	65.3	88.9	112.6	59.7	83.3	106.9
		72	TC	149.7	149.7	149.7	140.3	140.3	140.3	130.1	130.1	130.1	119.8	119.8	119.8	108.8	108.8	108.8
			SHC	57.6	81.6	105.5	52.6	76.5	100.4	47.4	71.3	95.2	42.1	66.0	89.8	36.7	60.5	84.3
		76	TC	—	161.7	161.7	—	151.8	151.8	—	141.4	141.4	—	130.5	130.5	—	119.0	119.0
			SHC	—	62.8	87.0	—	57.8	81.9	—	52.6	76.7	—	47.3	71.3	—	41.8	65.7
5000 cfm	EA (wb)	58	TC	128.4	128.4	145.7	120.8	120.8	137.5	112.9	112.9	128.9	104.5	104.5	119.7	95.6	95.6	110.0
			SHC	111.1	128.4	145.7	104.2	120.8	137.5	97.0	112.9	128.9	89.3	104.5	119.7	81.3	95.6	110.0
		62	TC	128.5	128.5	151.6	121.0	121.0	143.2	113.0	113.0	134.3	104.6	104.6	124.9	95.7	95.7	114.9
			SHC	105.4	128.5	151.6	98.7	121.0	143.2	91.7	113.0	134.3	84.4	104.6	124.9	76.5	95.7	114.9
		67	TC	137.5	137.5	137.7	128.4	128.4	132.5	118.9	118.9	127.1	109.0	109.0	121.5	98.5	98.5	115.5
			SHC	85.3	111.5	137.7	80.1	106.3	132.5	74.9	101.0	127.1	69.5	95.5	121.5	63.8	89.7	115.5
		72	TC	151.8	151.8	151.8	142.2	142.2	142.2	131.8	131.8	131.8	121.3	121.3	121.3	110.1	110.1	110.1
			SHC	59.6	86.0	112.3	54.5	80.9	107.2	49.3	75.6	102.0	44.0	70.3	96.6	38.5	64.7	91.0
		76	TC	—	163.8	163.8	—	153.8	153.8	—	143.2	143.2	—	132.1	132.1	—	120.4	120.4
			SHC	—	65.2	91.8	—	60.1	86.7	—	54.9	81.4	—	49.5	75.9	—	44.0	70.3

NOTE(S):

a. See minimum-maximum airflow ratings on page 7.

LEGEND

— — Do Not Operate
cfm — Cubic Feet Per Minute (Supply Air)
EA (db) — Entering Air Temperature (dry bulb)
EA (wb) — Entering Air Temperature (wet bulb)
SHC — Sensible Heat Capacity (1000 Btuh) Gross
TC — Total Capacity (1000 Btuh) Gross

48QE*M12 Single Stage Cooling Capacities[a]

48QE*M12				AMBIENT TEMPERATURE (°F)														
				85			95			105			115			125		
				EA (db)			EA (db)			EA (db)			EA (db)			EA (db)		
				75	80	85	75	80	85	75	80	85	75	80	85	75	80	85
1800 cfm	EA (wb)	58	TC	60.5	60.5	69.4	55.9	55.9	64.5	51.1	51.1	59.4	46.1	46.1	54.1	40.9	40.9	48.5
			SHC	51.5	60.5	69.4	47.2	55.9	64.5	42.8	51.1	59.4	38.1	46.1	54.1	33.3	40.9	48.5
		62	TC	64.9	64.9	65.4	59.4	59.4	61.5	53.8	53.8	57.7	47.9	47.9	53.7	41.7	41.7	49.6
			SHC	45.8	55.6	65.4	42.0	51.8	61.5	38.1	47.9	57.7	34.2	43.9	53.7	30.2	39.9	49.6
		67	TC	73.6	73.6	73.6	67.9	67.9	67.9	61.9	61.9	61.9	55.6	55.6	55.6	49.0	49.0	49.0
			SHC	36.9	46.8	56.6	33.1	42.9	52.7	29.2	39.0	48.8	25.2	35.0	44.8	21.1	30.9	40.7
		72	TC	83.2	83.2	83.2	77.1	77.1	77.1	70.7	70.7	70.7	64.1	64.1	64.1	57.1	57.1	57.1
			SHC	28.0	37.9	47.8	24.2	34.0	43.9	20.2	30.1	40.0	16.2	26.0	35.9	12.0	21.9	31.7
		76	TC	—	91.4	91.4	—	85.0	85.0	—	78.3	78.3	—	71.3	71.3	—	64.0	64.0
			SHC	—	30.7	40.6	—	26.8	36.7	—	22.9	32.8	—	18.8	28.7	—	14.6	24.5
2100 cfm	EA (wb)	58	TC	65.3	65.3	74.8	60.4	60.4	69.6	55.4	55.4	64.2	50.1	50.1	58.5	44.6	44.6	52.6
			SHC	55.8	65.3	74.8	51.3	60.4	69.6	46.6	55.4	64.2	41.7	50.1	58.5	36.6	44.6	52.6
		62	TC	67.8	67.8	73.6	62.1	62.1	69.7	56.3	56.3	65.6	50.4	50.4	61.2	44.7	44.7	55.3
			SHC	50.9	62.2	73.6	47.0	58.3	69.7	43.0	54.3	65.6	38.8	50.0	61.2	34.0	44.7	55.3
		67	TC	76.6	76.6	76.6	70.5	70.5	70.5	64.3	64.3	64.3	57.7	57.7	57.7	50.9	50.9	50.9
			SHC	40.4	51.8	63.2	36.5	47.9	59.3	32.5	43.9	55.3	28.4	39.8	51.2	24.2	35.6	47.0
		72	TC	86.3	86.3	86.3	79.9	79.9	79.9	73.3	73.3	73.3	66.3	66.3	66.3	59.1	59.1	59.1
			SHC	29.8	41.3	52.8	25.9	37.4	48.9	21.9	33.3	44.8	17.7	29.2	40.7	13.5	25.0	36.4
		76	TC	—	94.6	94.6	—	87.9	87.9	—	81.0	81.0	—	73.7	73.7	—	66.0	66.0
			SHC	—	32.8	44.4	—	28.8	40.4	—	24.8	36.3	—	20.7	32.2	—	16.4	27.9
2400 cfm	EA (wb)	58	TC	69.4	69.4	79.3	64.3	64.3	73.9	59.0	59.0	68.2	53.5	53.5	62.2	47.6	47.6	56.0
			SHC	59.5	69.4	79.3	54.7	64.3	73.9	49.8	59.0	68.2	44.7	53.5	62.2	39.3	47.6	56.0
		62	TC	70.2	70.2	81.3	64.5	64.5	77.1	59.1	59.1	71.4	53.6	53.6	65.3	47.7	47.7	58.9
			SHC	55.6	68.5	81.3	51.6	64.3	77.1	46.8	59.1	71.4	41.8	53.6	65.3	36.6	47.7	58.9
		67	TC	78.9	78.9	78.9	72.6	72.6	72.6	66.1	66.1	66.1	59.4	59.4	59.4	52.3	52.3	53.2
			SHC	43.6	56.6	69.6	39.6	52.7	65.7	35.6	48.6	61.6	31.5	44.5	57.5	27.3	40.2	53.2
		72	TC	88.7	88.7	88.7	82.1	82.1	82.1	75.2	75.2	75.2	68.1	68.1	68.1	60.6	60.6	60.6
			SHC	31.4	44.5	57.6	27.4	40.5	53.5	23.3	36.4	49.4	19.2	32.2	45.3	14.9	27.9	41.0
		76	TC	—	97.1	97.1	—	90.2	90.2	—	83.0	83.0	—	75.5	75.5	—	67.6	67.6
			SHC	—	34.7	47.9	—	30.7	43.9	—	26.6	39.8	—	22.4	35.5	—	18.0	31.1
2700 cfm	EA (wb)	58	TC	72.9	72.9	83.2	67.6	67.6	77.5	62.1	62.1	71.6	56.3	56.3	65.4	50.3	50.3	58.9
			SHC	62.6	72.9	83.2	57.7	67.6	77.5	52.5	62.1	71.6	47.2	56.3	65.4	41.7	50.3	58.9
		62	TC	73.0	73.0	86.8	67.7	67.7	81.0	62.2	62.2	74.9	56.4	56.4	68.6	50.4	50.4	61.9
			SHC	59.3	73.0	86.8	54.4	67.7	81.0	49.4	62.2	74.9	44.3	56.4	68.6	38.9	50.4	61.9
		67	TC	80.7	80.7	80.7	74.3	74.3	74.3	67.6	67.6	67.7	60.7	60.7	63.5	53.5	53.5	59.2
			SHC	46.7	61.3	75.9	42.7	57.3	71.8	38.6	53.1	67.7	34.4	49.0	63.5	30.2	44.7	59.2
		72	TC	90.6	90.6	90.6	83.8	83.8	83.8	76.8	76.8	76.8	69.5	69.5	69.5	61.8	61.8	61.8
			SHC	32.9	47.5	62.2	28.9	43.5	58.1	24.7	39.3	53.9	20.5	35.1	49.7	16.2	30.7	45.3
		76	TC	—	99.1	99.1	—	91.9	91.9	—	84.5	84.5	—	76.8	76.8	—	68.8	68.8
			SHC	—	36.5	51.2	—	32.4	47.1	—	28.2	42.9	—	23.9	38.6	—	19.5	34.1
3000 cfm	EA (wb)	58	TC	76.0	76.0	86.6	70.4	70.4	80.7	64.7	64.7	74.6	58.8	58.8	68.1	52.5	52.5	61.4
			SHC	65.3	76.0	86.6	60.2	70.4	80.7	54.9	64.7	74.6	49.4	58.8	68.1	43.7	52.5	61.4
		62	TC	76.1	76.1	90.3	70.5	70.5	84.2	64.8	64.8	78.0	58.9	58.9	71.4	52.6	52.6	64.4
			SHC	61.8	76.1	90.3	56.8	70.5	84.2	51.7	64.8	78.0	46.4	58.9	71.4	40.8	52.6	64.4
		67	TC	82.2	82.2	82.2	75.6	75.6	77.8	68.9	68.9	73.6	61.8	61.8	69.3	54.5	54.5	64.9
			SHC	49.6	65.7	81.8	45.6	61.7	77.8	41.5	57.5	73.6	37.3	53.3	69.3	33.0	48.9	64.9
		72	TC	92.1	92.1	92.1	85.2	85.2	85.2	78.0	78.0	78.0	70.5	70.5	70.5	62.7	62.7	62.7
			SHC	34.3	50.4	66.6	30.2	46.3	62.5	26.0	42.1	58.3	21.7	37.9	54.0	17.4	33.6	49.7
		76	TC	—	100.6	100.6	—	93.3	93.3	—	85.8	85.8	—	77.9	77.9	—	69.7	69.7
			SHC	—	38.1	54.4	—	33.9	50.2	—	29.7	45.9	—	25.4	41.5	—	20.9	37.0

NOTE(S):

a. See minimum-maximum airflow ratings on page 7.

LEGEND

— — Do Not Operate
cfm — Cubic Feet Per Minute (Supply Air)
EA (db) — Entering Air Temperature (dry bulb)
EA (wb) — Entering Air Temperature (wet bulb)
SHC — Sensible Heat Capacity (1000 Btuh) Gross
TC — Total Capacity (1000 Btuh) Gross

48QE*N07 — Unit with Humidi-MiZer® System in Subcooling Mode — Cooling Capacities

TEMP (°F) AIR ENT CONDENSER (Edb)		AIR ENTERING EVAPORATOR (°F)								
		80 Dry Bulb 62 Wet Bulb (36% Relative)			80 Dry Bulb 67 Wet Bulb (51% Relative)			80 Dry Bulb 72 Wet Bulb (68% Relative)		
		AIR ENTERING EVAPORATOR (SCFM / STATIC)								
		1800	2400	3000	1800	2400	3000	1800	2400	3000
75	TC	69.7	75.3	80.0	78.8	84.4	89.8	89.4	93.1	101.3
	SHC	59.4	71.8	82.5	47.0	56.9	65.6	34.9	44.2	46.6
	kW	4.3	4.5	4.5	4.4	4.5	4.5	4.4	4.5	4.5
85	TC	64.5	69.7	74.1	73.0	78.5	83.1	82.8	86.2	93.8
	SHC	54.0	65.3	75.0	42.8	52.1	59.6	31.8	40.2	42.4
	kW	4.8	5.0	5.0	4.8	5.0	5.0	4.8	5.0	5.0
95	TC	59.8	64.5	68.6	67.6	72.2	77.0	76.6	79.8	86.8
	SHC	49.1	59.4	68.2	38.9	46.6	54.2	28.9	36.6	38.5
	kW	5.4	5.6	5.5	5.4	5.6	5.6	5.4	5.6	5.6
105	TC	55.0	59.4	63.1	62.2	66.7	70.8	70.5	73.5	79.9
	SHC	44.2	53.4	61.4	35.0	42.5	48.8	26.0	32.9	34.7
	kW	4.8	5.0	5.0	4.8	6.1	5.0	4.8	5.0	5.0
115	TC	50.6	54.6	58.1	57.2	60.8	65.1	64.9	67.6	73.5
	SHC	39.8	48.1	55.2	31.5	37.7	43.9	23.4	29.6	31.2
	kW	4.3	4.5	4.5	4.4	6.7	4.5	4.4	4.5	4.5

48QE*N07 — Unit with Humidi-MiZer System in Hot Gas Reheat Mode — Cooling Capacities

TEMP (°F) AIR ENT CONDENSER (Edb)		AIR ENTERING EVAPORATOR (°F)								
		75 Dry Bulb 62.5 Wet Bulb (50% Relative)			75 Dry Bulb 64 Wet Bulb (56% Relative)			75 Dry Bulb 65.3 Wet Bulb (60% Relative)		
		AIR ENTERING EVAPORATOR (SCFM)								
		1800	2400	3000	1800	2400	3000	1800	2400	3000
80	TC	20.2	23.8	26.7	19.3	22.7	25.3	18.5	21.7	24.1
	SHC	2.2	2.2	2.1	1.5	1.5	1.5	1.0	1.0	0.9
	kW	4.5	4.4	4.3	4.6	4.5	4.4	4.7	4.5	4.4
75	TC	18.8	22.1	24.8	18.0	21.1	23.5	17.3	20.1	22.4
	SHC	1.5	1.5	1.5	0.9	0.9	0.8	0.3	0.3	0.3
	kW	4.6	4.4	4.4	4.6	4.5	4.4	4.7	4.6	4.5
70	TC	17.5	20.5	22.9	16.7	19.5	21.7	16.0	18.6	20.6
	SHC	0.8	0.8	0.8	0.2	0.2	0.2	-0.3	-0.3	-0.3
	kW	4.6	4.5	4.4	4.7	4.6	4.5	4.8	4.7	4.6
60	TC	14.8	17.1	19.0	14.1	16.3	18.0	13.5	15.5	17.1
	SHC	-0.6	-0.6	-0.6	-1.1	-1.1	-1.1	-1.6	-1.6	-1.6
	kW	4.7	4.6	4.5	4.8	4.7	4.6	4.9	4.8	4.7
50	TC	12.0	13.8	15.2	11.5	13.1	14.4	11.0	12.5	13.6
	SHC	-2.0	-2.0	-2.0	-2.4	-2.5	-2.5	-2.9	-2.9	-2.9
	kW	4.8	4.7	4.7	4.9	4.8	4.8	5.0	4.9	4.8
40	TC	9.3	10.5	11.4	8.9	9.9	10.7	8.5	9.4	10.1
	SHC	-3.3	-3.3	-3.3	-3.8	-3.8	-3.8	-4.1	-4.1	-4.1
	kW	4.9	4.8	4.8	5.0	4.9	4.9	5.1	5.0	5.0

48QE*N08 — Unit with Humidi-MiZer® System in Subcooling Mode — Cooling Capacities

TEMP (°F) AIR ENT CONDENSER (Edb)		AIR ENTERING EVAPORATOR (°F)								
		80 Dry Bulb 62 Wet Bulb (36% Relative)			80 Dry Bulb 67 Wet Bulb (51% Relative)			80 Dry Bulb 72 Wet Bulb (68% Relative)		
		AIR ENTERING EVAPORATOR (SCFM / STATIC)								
		2250	3000	3750	2250	3000	3750	2250	3000	3750
75	TC	85.5	89.7	93.0	97.3	101.9	105.4	109.1	114.1	117.9
	SHC	72.1	76.5	79.0	63.5	68.3	71.0	55.0	60.2	63.1
	kW	5.5	6.2	6.7	5.7	6.3	6.8	5.8	6.3	6.8
85	TC	77.2	81.9	85.5	89.0	94.1	98.0	100.8	106.3	110.5
	SHC	67.7	72.7	75.5	56.9	62.3	65.4	46.1	51.9	55.2
	kW	6.4	7.1	7.5	6.6	7.1	7.5	6.7	7.2	7.5
95	TC	68.9	74.1	78.1	80.7	86.3	90.6	92.5	98.4	103.1
	SHC	63.3	69.0	72.1	50.3	56.3	59.7	37.2	43.7	47.4
	kW	7.3	7.9	8.4	7.5	8.0	8.3	7.7	8.1	8.3
105	TC	60.7	66.3	70.6	72.4	78.5	83.1	84.1	90.6	95.7
	SHC	59.0	65.2	68.7	43.6	50.3	54.1	28.3	35.5	39.5
	kW	8.2	8.7	9.2	8.4	8.8	9.1	8.6	8.9	9.1
115	TC	52.4	58.5	63.2	64.1	70.6	75.7	75.8	82.8	88.3
	SHC	54.6	61.4	65.2	37.0	44.3	48.4	19.3	27.2	31.6
	kW	9.1	9.6	10.0	9.3	9.7	9.9	9.5	9.8	9.9

48QE*N08 — Unit with Humidi-MiZer System in Hot Gas Reheat Mode — Cooling Capacities

TEMP (°F) AIR ENT CONDENSER (Edb)		AIR ENTERING EVAPORATOR (°F)								
		75 Dry Bulb 62.5 Wet Bulb (50% Relative)			75 Dry Bulb 64 Wet Bulb (56% Relative)			75 Dry Bulb 65.3 Wet Bulb (60% Relative)		
		AIR ENTERING EVAPORATOR (SCFM)								
		2250	3000	3750	2250	3000	3750	2250	3000	3750
80	TC	17.3	20.7	24.7	17.8	19.6	22.2	18.0	18.7	20.0
	SHC	-0.6	0.7	1.7	-1.2	0.1	1.1	-1.8	-0.5	0.6
	kW	7.3	7.1	6.9	6.9	7.1	6.9	7.3	7.1	6.9
75	TC	17.4	22.3	24.5	17.8	21.3	23.5	18.1	20.5	22.6
	SHC	-0.2	1.0	2.0	-0.8	0.4	1.4	-1.3	-0.1	0.9
	kW	7.1	6.9	6.8	6.7	6.9	6.8	7.2	7.0	6.8
70	TC	17.5	23.8	26.2	17.9	23.0	25.3	18.1	22.3	24.6
	SHC	0.1	1.3	2.2	-0.4	0.8	1.7	-0.9	0.3	1.2
	kW	7.0	6.8	6.7	6.6	6.8	6.7	7.0	6.8	6.7
60	TC	17.7	26.9	29.6	18.0	26.4	29.0	18.2	26.0	28.6
	SHC	0.8	1.9	2.7	0.4	1.4	2.3	0.0	1.1	1.9
	kW	6.7	6.5	6.4	6.4	6.5	6.4	6.7	6.6	6.5
50	TC	17.9	30.0	33.0	18.2	29.8	32.8	18.3	29.6	32.6
	SHC	1.6	2.5	3.2	1.2	2.1	2.8	0.9	1.8	2.5
	kW	6.3	6.2	6.1	6.1	6.3	6.2	6.4	6.3	6.2
40	TC	18.1	33.1	36.4	18.3	33.2	36.5	18.4	33.2	36.6
	SHC	2.3	3.0	3.6	2.0	2.8	3.4	1.8	2.6	3.2
	kW	6.0	5.9	5.9	5.9	6.0	5.9	6.2	6.1	6.0

48QE*N09 — Unit with Humidi-MiZer® System in Subcooling Mode — Cooling Capacities

TEMP (°F) AIR ENT CONDENSER (Edb)		AIR ENTERING EVAPORATOR (°F)								
		80 Dry Bulb 62 Wet Bulb (36% Relative)			80 Dry Bulb 67 Wet Bulb (51% Relative)			80 Dry Bulb 72 Wet Bulb (68% Relative)		
		AIR ENTERING EVAPORATOR (SCFM / STATIC)								
		2400	3200	4000	2400	3200	4000	2400	3200	4000
75	TC	100.1	105.0	108.8	112.2	117.5	121.6	124.2	129.9	134.3
	SHC	75.6	84.7	91.8	65.1	73.9	80.7	54.7	63.1	69.6
	kW	6.6	6.7	6.9	6.6	6.8	6.9	6.6	6.8	6.9
85	TC	86.7	92.2	96.5	98.1	104.1	108.7	109.6	116.0	121.0
	SHC	69.0	77.5	84.1	55.8	63.7	69.9	42.6	50.0	55.7
	kW	7.4	7.6	7.7	7.4	7.6	7.7	7.4	7.6	7.8
95	TC	73.3	79.4	84.2	84.1	90.8	95.9	95.0	102.1	107.6
	SHC	62.4	70.3	76.4	46.4	53.6	59.1	30.4	36.8	41.8
	kW	8.2	8.4	8.6	8.2	8.4	8.6	8.2	8.4	8.6
105	TC	59.9	66.7	71.9	70.1	77.4	83.1	80.3	88.2	94.3
	SHC	55.7	63.1	68.7	37.0	43.4	48.3	18.3	23.7	27.8
	kW	9.0	9.2	9.4	9.0	9.2	9.4	9.0	9.3	9.5
115	TC	46.5	53.9	59.6	56.1	64.1	70.3	65.7	74.3	80.9
	SHC	49.1	55.8	61.0	27.6	33.2	37.5	6.2	10.6	13.9
	kW	9.8	10.1	10.3	9.8	10.1	10.3	9.8	10.1	10.3

48QE*N09 — Unit with Humidi-MiZer System in Hot Gas Reheat Mode — Cooling Capacities

TEMP (°F) AIR ENT CONDENSER (Edb)		AIR ENTERING EVAPORATOR (°F)								
		75 Dry Bulb 62.5 Wet Bulb (50% Relative)			75 Dry Bulb 64 Wet Bulb (56% Relative)			75 Dry Bulb 65.3 Wet Bulb (60% Relative)		
		AIR ENTERING EVAPORATOR (SCFM)								
		2400	3200	4000	2400	3200	4000	2400	3200	4000
80	TC	50.4	52.3	53.9	52.0	54.2	55.9	53.4	55.8	57.7
	SHC	9.6	8.7	8.0	8.0	7.1	6.4	6.7	5.7	4.9
	kW	6.0	6.5	6.9	6.3	6.5	6.9	5.9	6.5	6.9
75	TC	50.8	52.7	54.3	52.4	54.5	56.2	53.8	56.1	58.0
	SHC	11.6	10.8	10.2	10.2	9.3	8.7	8.9	8.1	7.4
	kW	5.8	6.3	6.7	6.1	6.3	6.7	5.8	6.3	6.7
70	TC	51.2	53.1	54.6	52.8	54.9	56.6	54.2	56.4	58.2
	SHC	13.6	12.8	12.3	12.3	11.5	10.9	11.2	10.4	9.8
	kW	5.7	6.1	6.5	6.0	6.1	6.5	5.7	6.1	6.5
60	TC	52.0	53.8	55.3	53.5	55.6	57.2	54.9	57.1	58.8
	SHC	17.5	16.9	16.5	16.6	16.0	15.5	15.8	15.1	14.6
	kW	5.4	5.8	6.1	5.7	5.8	6.1	5.4	5.8	6.1
50	TC	52.8	54.6	56.0	54.3	56.2	57.8	55.7	57.7	59.4
	SHC	21.5	21.1	20.7	20.9	20.4	20.0	20.3	19.8	19.5
	kW	5.2	5.5	5.7	5.4	5.5	5.7	5.2	5.5	5.8
40	TC	53.6	55.3	56.7	55.1	56.9	58.4	56.4	58.3	59.9
	SHC	25.5	25.2	24.9	25.2	24.8	24.6	24.9	24.6	24.3
	kW	4.9	5.1	5.3	5.1	5.2	5.3	4.9	5.2	5.4

48QE*N12 — Unit with Humidi-MiZer® System in Subcooling Mode — Cooling Capacities

TEMP (°F) AIR ENT CONDENSER (Edb)		AIR ENTERING EVAPORATOR (°F)								
		80 Dry Bulb 62 Wet Bulb (36% Relative)			80 Dry Bulb 67 Wet Bulb (51% Relative)			80 Dry Bulb 72 Wet Bulb (68% Relative)		
		AIR ENTERING EVAPORATOR (SCFM / STATIC)								
		3000	4000	5000	3000	4000	5000	3000	4000	5000
75	TC	122.4	122.5	122.6	137.0	137.1	137.3	151.6	151.8	151.9
	SHC	104.6	104.2	103.9	87.0	91.0	93.8	69.5	77.7	83.6
	kW	3.7	3.7	3.7	3.8	3.8	3.8	3.8	3.8	3.8
85	TC	112.4	112.6	112.7	126.9	127.0	127.2	141.3	141.5	141.6
	SHC	103.5	99.9	97.3	82.3	83.4	84.1	61.2	66.8	70.9
	kW	4.3	4.3	4.3	4.4	4.4	4.4	4.5	4.4	4.4
95	TC	102.4	102.6	102.8	116.7	116.9	117.1	131.0	131.2	131.4
	SHC	102.4	95.6	90.7	77.6	75.8	74.4	52.9	56.0	58.2
	kW	4.9	4.9	4.9	5.0	5.0	5.0	5.1	5.1	5.1
105	TC	92.5	92.7	92.9	106.6	106.8	107.0	120.7	121.0	121.1
	SHC	101.2	91.3	84.1	72.9	68.2	64.8	44.6	45.1	45.4
	kW	5.5	5.5	5.5	5.6	5.6	5.6	5.7	5.7	5.7
115	TC	82.5	82.8	83.0	96.5	96.7	96.9	110.4	110.7	110.9
	SHC	100.1	87.0	77.5	68.2	60.6	55.1	36.3	34.2	32.7
	kW	6.0	6.0	6.0	6.2	6.2	6.1	6.3	6.3	6.3

48QE*N12 — Unit with Humidi-MiZer System in Hot Gas Reheat Mode — Cooling Capacities

TEMP (°F) AIR ENT CONDENSER (Edb)		AIR ENTERING EVAPORATOR (°F)								
		75 Dry Bulb 62.5 Wet Bulb (50% Relative)			75 Dry Bulb 64 Wet Bulb (56% Relative)			75 Dry Bulb 65.3 Wet Bulb (60% Relative)		
		AIR ENTERING EVAPORATOR (SCFM)								
		3000	4000	5000	3000	4000	5000	3000	4000	5000
80	TC	36.6	37.2	37.6	36.8	37.4	37.9	37.1	37.7	38.1
	SHC	5.7	5.7	5.7	2.0	2.0	2.0	-1.2	-1.2	-1.2
	kW	8.8	8.2	7.8	6.2	7.7	7.3	7.8	7.2	6.8
75	TC	37.3	37.8	38.2	37.6	38.1	38.5	37.8	38.4	38.8
	SHC	7.9	7.9	7.9	4.4	4.4	4.4	1.5	1.5	1.5
	kW	8.6	8.1	7.7	6.2	7.6	7.2	7.7	7.1	6.7
70	TC	38.0	38.4	38.8	38.3	38.8	39.2	38.6	39.1	39.5
	SHC	10.0	10.0	10.0	6.9	6.9	6.9	4.2	4.2	4.2
	kW	8.4	7.9	7.5	6.1	7.5	7.1	7.6	7.1	6.7
60	TC	39.3	39.7	40.0	39.8	40.2	40.5	40.2	40.6	40.9
	SHC	14.4	14.3	14.3	11.8	11.8	11.8	9.6	9.6	9.6
	kW	8.0	7.6	7.3	6.1	7.2	6.9	7.3	6.9	6.6
50	TC	40.7	41.0	41.2	41.3	41.6	41.8	41.8	42.1	42.4
	SHC	18.7	18.7	18.7	16.7	16.7	16.7	15.0	15.0	15.0
	kW	7.6	7.3	7.0	6.1	7.0	6.7	7.1	6.8	6.5
40	TC	42.1	42.3	42.5	42.8	43.0	43.2	43.4	43.6	43.8
	SHC	23.0	23.0	23.0	21.6	21.6	21.6	20.4	20.4	20.4
	kW	7.3	7.0	6.8	6.0	6.8	6.6	6.9	6.6	6.4

48QE*M07 Heating Capacities

48QE*M07 (6 Tons)											
Return Air (°F db)	CFM (Standard Air)		Temperature Air Entering Outdoor Coil (°F db at 70% rh)								
			–10	0	10	17	30	40	47	50	60
55	1800	Capacity	23.4	29.4	37.6	43.1	53.4	63.5	69.7	71.9	82.0
		Int. Cap.	21.6	27.1	34.5	39.3	46.8	63.5	69.7	71.9	82.0
	2400	Capacity	23.8	29.9	37.9	43.2	53.4	63.9	71.3	73.7	84.6
		Int. Cap.	22.0	27.5	34.8	39.4	46.8	63.9	71.3	73.7	84.6
	3000	Capacity	24.2	30.3	38.4	44.1	54.0	64.7	72.0	74.9	86.2
		Int. Cap.	22.4	27.9	35.2	40.2	47.3	64.7	72.0	74.9	86.2
70	1800	Capacity	21.4	27.3	35.2	40.5	50.9	60.9	66.6	69.7	78.5
		Int. Cap.	19.8	25.1	32.4	36.9	44.6	60.9	66.6	69.7	78.5
	2400	Capacity	21.9	27.9	35.9	41.3	52.0	62.2	68.4	71.8	81.0
		Int. Cap.	20.3	25.7	33.0	37.6	45.5	62.2	68.4	71.8	81.0
	3000	Capacity	22.4	28.4	36.5	41.6	54.2	62.8	69.5	73.5	82.6
		Int. Cap.	20.7	26.1	33.5	38.0	47.4	62.8	69.5	73.5	82.6
80	1800	Capacity	19.8	25.7	33.7	38.5	49.3	58.9	64.5	67.9	76.9
		Int. Cap.	18.3	23.6	30.9	35.1	43.2	58.9	64.5	67.9	76.9
	2400	Capacity	20.4	26.3	34.4	39.4	50.2	60.7	66.1	69.8	78.5
		Int. Cap.	18.9	24.2	31.6	35.9	44.0	60.7	66.1	69.8	78.5
	3000	Capacity	20.9	26.8	34.9	40.1	51.0	61.1	67.4	71.1	80.1
		Int. Cap.	19.4	24.7	32.0	36.5	44.7	61.1	67.4	71.1	80.1

LEGEND

Capacity — Instantaneous Capacity (1000 Btuh) — includes indoor fan motor heat at AHRI static conditions
Int. Cap. — Integrated Capacity = instantaneous capacity minus the effects of frost on the OD coil and the heat required to defrost it
rh — Relative Humidity
db — Dry Bulb

48QE*M08 Heating Capacities

48QE*M08 (7.5 Tons)											
Return Air (°F db)	CFM (Standard Air)		Temperature Air Entering Outdoor Coil (°F db at 70% rh)								
			–10	0	10	17	30	40	47	50	60
55	2250	Capacity	33.6	39.9	49.6	55.6	68.0	81.4	89.6	92.5	105.1
		Int. Cap.	31.1	36.7	45.5	50.7	59.6	81.4	89.6	92.5	105.1
	3000	Capacity	30.2	40.7	50.5	56.6	69.4	82.9	91.6	94.7	107.9
		Int. Cap.	27.9	37.5	46.3	51.6	60.8	82.9	91.6	94.7	107.9
	3750	Capacity	35.6	41.9	51.6	57.7	70.7	84.4	93.3	96.4	110.1
		Int. Cap.	32.9	38.6	47.4	52.6	61.9	84.4	93.3	96.4	110.1
70	2250	Capacity	31.9	38.0	48.0	53.8	65.7	79.2	87.3	90.0	102.0
		Int. Cap.	29.5	35.0	44.0	49.0	57.6	79.2	87.3	90.0	102.0
	3000	Capacity	29.5	39.0	48.7	54.9	67.2	80.9	89.3	92.2	105.0
		Int. Cap.	27.3	35.9	44.7	50.0	58.9	80.9	89.3	92.2	105.0
	3750	Capacity	34.1	40.4	50.0	56.1	68.7	82.5	91.0	94.1	107.3
		Int. Cap.	31.5	37.1	45.9	51.2	60.2	82.5	91.0	94.1	107.3
80	2250	Capacity	30.6	36.7	46.7	52.3	64.2	77.9	85.7	88.3	99.9
		Int. Cap.	28.3	33.8	42.9	47.7	56.2	77.9	85.7	88.3	99.9
	3000	Capacity	28.8	37.8	47.7	53.5	65.7	79.5	87.6	90.5	102.8
		Int. Cap.	26.7	34.8	43.8	48.8	57.5	79.5	87.6	90.5	102.8
	3750	Capacity	32.9	39.0	49.1	54.9	67.2	81.1	89.4	92.4	105.2
		Int. Cap.	30.5	35.9	45.1	50.0	58.9	81.1	89.4	92.4	105.2

LEGEND

Capacity — Instantaneous Capacity (1000 Btuh) — includes indoor fan motor heat at AHRI static conditions
Int. Cap. — Integrated Capacity = instantaneous capacity minus the effects of frost on the OD coil and the heat required to defrost it
rh — Relative Humidity
db — Dry Bulb

48QE*M09 Heating Capacities

48QE*M09 (8.5 Tons)											
Return Air (°F db)	CFM (Standard Air)		Temperature Air Entering Outdoor Coil (°F db at 70% rh)								
			–10	0	10	17	30	40	47	50	60
55	2550	Capacity	35.4	43.0	52.1	59.1	72.8	84.8	94.6	97.9	111.8
		Int. Cap.	32.7	39.6	47.9	53.9	63.8	84.8	94.6	97.9	111.8
	3400	Capacity	36.4	44.1	53.4	60.4	74.6	87.2	97.5	101.1	116.7
		Int. Cap.	33.7	40.6	49.0	55.0	65.4	87.2	97.5	101.1	116.7
	4250	Capacity	37.6	45.2	54.6	61.6	76.1	89.0	99.8	103.6	119.1
		Int. Cap.	34.8	41.6	50.1	56.2	66.7	89.0	99.8	103.6	119.1
70	2550	Capacity	32.9	40.4	49.5	56.0	69.3	81.0	90.5	93.6	106.9
		Int. Cap.	30.4	37.2	45.4	51.1	60.7	81.0	90.5	93.6	106.9
	3400	Capacity	34.0	41.7	50.8	58.0	71.1	83.4	93.5	96.5	110.9
		Int. Cap.	31.4	38.4	46.7	52.9	62.3	83.4	93.5	96.5	110.9
	4250	Capacity	35.3	43.0	52.0	59.0	72.7	85.2	95.7	99.1	114.0
		Int. Cap.	32.6	39.6	47.7	53.8	63.7	85.2	95.7	99.1	114.0
80	2550	Capacity	31.1	38.8	48.7	54.1	67.0	78.6	87.7	90.8	103.7
		Int. Cap.	28.7	35.7	44.7	49.3	58.7	78.6	87.7	90.8	103.7
	3400	Capacity	32.2	40.0	50.0	55.5	68.8	80.9	90.9	93.6	109.9
		Int. Cap.	29.8	36.8	45.9	50.6	60.2	80.9	90.9	93.6	109.9
	4250	Capacity	33.6	41.2	51.2	56.8	70.4	82.6	92.9	96.2	110.7
		Int. Cap.	31.1	37.9	47.0	51.8	61.7	82.6	92.9	96.2	110.7

LEGEND

Capacity — Instantaneous Capacity (1000 Btuh) — includes indoor fan motor heat at AHRI static conditions
Int. Cap. — Integrated Capacity = instantaneous capacity minus the effects of frost on the OD coil and the heat required to defrost it
rh — Relative Humidity
db — Dry Bulb

48QE*M12 Heating Capacities

48QE*M12 (10 Tons)											
Return Air (°F db)	CFM (Standard Air)		Temperature Air Entering Outdoor Coil (°F db at 70% rh)								
			–10	0	10	17	30	40	47	50	60
55	3000	Capacity	30.1	41.0	55.4	64.6	83.4	100.5	111.7	115.9	132.9
		Int. Cap.	27.8	37.8	50.8	58.9	73.1	100.5	111.7	115.9	132.9
	4000	Capacity	31.2	42.5	57.1	66.7	86.7	103.9	116.2	120.6	139.1
		Int. Cap.	28.8	39.1	52.4	60.8	76.0	103.9	116.2	120.6	139.1
	5000	Capacity	32.2	43.7	59.5	68.1	88.9	106.2	119.2	123.7	143.2
		Int. Cap.	29.8	40.2	54.6	62.1	77.9	106.2	119.2	123.7	143.2
70	3000	Capacity	25.4	36.2	50.6	59.6	77.3	94.9	105.4	110.1	125.6
		Int. Cap.	23.5	33.3	46.5	54.4	67.8	94.9	105.4	110.1	125.6
	4000	Capacity	26.5	37.7	52.4	61.7	80.9	98.4	109.7	114.3	131.6
		Int. Cap.	24.5	34.7	48.1	56.2	70.9	98.4	109.7	114.3	131.6
	5000	Capacity	27.7	38.9	53.7	63.2	83.2	100.7	112.6	117.1	135.5
		Int. Cap.	25.6	35.8	49.3	57.6	72.9	100.7	112.6	117.1	135.5
80	3000	Capacity	22.1	32.8	47.5	56.3	73.6	91.5	101.2	106.0	121.1
		Int. Cap.	20.4	30.2	43.6	51.3	64.5	91.5	101.2	106.0	121.1
	4000	Capacity	23.4	34.3	49.2	58.3	76.5	94.7	105.5	110.3	126.6
		Int. Cap.	21.7	31.6	45.1	53.2	67.0	94.7	105.5	110.3	126.6
	5000	Capacity	24.7	35.6	50.5	59.8	79.3	96.9	108.3	113.3	130.4
		Int. Cap.	22.8	32.7	46.4	54.5	69.5	96.9	108.3	113.3	130.4

LEGEND

Capacity — Instantaneous Capacity (1000 Btuh) — includes indoor fan motor heat at AHRI static conditions
Int. Cap. — Integrated Capacity = instantaneous capacity minus the effects of frost on the OD coil and the heat required to defrost it
rh — Relative Humidity
db — Dry Bulb

External Static Pressure Deductions for Gas Heat Exchanger

6 to 8.5 Ton Units

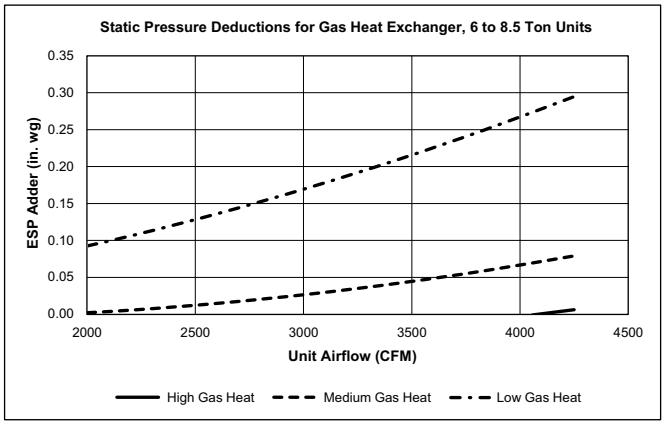

10 Ton Units

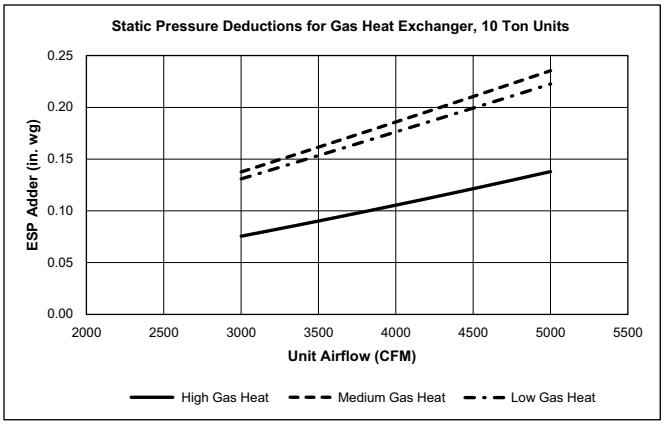

Pressure Drop Across Gas Heat Exchanger

6 to 8.5 Ton Units

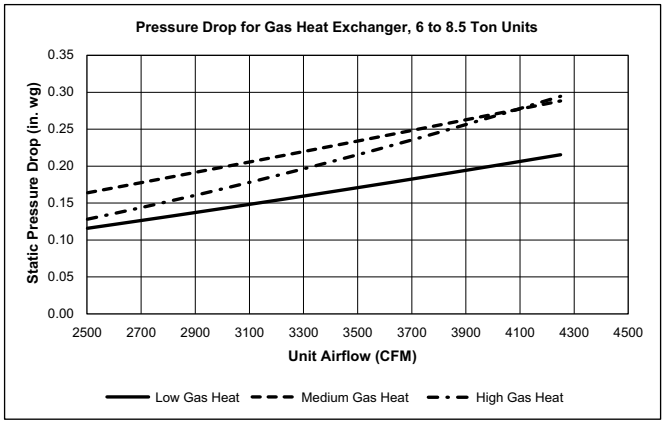

10 Ton Units

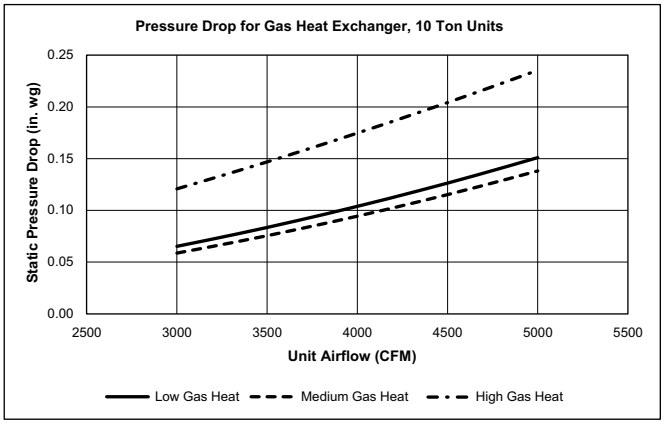

Gas Heat Static Pressure Deductions (in. wg) — 6 to 8.5 Ton Units

CFM	1800	2210	2615	3025	3435	3840	4250
Medium Gas Heat	0.00	0.01	0.02	0.03	0.04	0.06	0.08
Low Gas Heat	0.08	0.11	0.14	0.17	0.21	0.25	0.29

Gas Heat Static Pressure Deductions (in. wg) — 10 Ton Units

CFM	3000	3335	3665	4000	4335	4665	5000
Medium Gas Heat	0.14	0.15	0.17	0.19	0.20	0.22	0.24
Low Gas Heat	0.13	0.15	0.16	0.18	0.19	0.21	0.22

Pressure Drop for Gas Heat Exchangers (in. wg) — 6 to 8.5 Ton Units

CFM	1800	2210	2615	3025	3435	3840	4250
Low Gas Heat	0.08	0.10	0.12	0.14	0.17	0.19	0.22
Medium Gas Heat	0.12	0.14	0.17	0.20	0.23	0.26	0.29
High Gas Heat	0.08	0.11	0.14	0.17	0.21	0.25	0.29

Pressure Drop for Gas Heat Exchangers (in. wg) — 10 Ton Units

CFM	3000	3335	3665	4000	4335	4665	5000
Low Gas Heat	0.07	0.08	0.09	0.10	0.12	0.13	0.15
Medium Gas Heat	0.06	0.07	0.08	0.09	0.11	0.12	0.14
High Gas Heat	0.12	0.14	0.16	0.17	0.19	0.21	0.24

Economizer Barometric Relief

Horizontal Economizer, 6 to 8.5 Ton Units

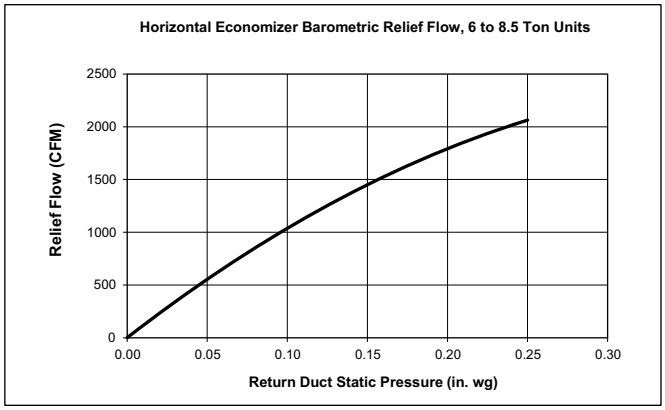

Vertical Economizer, 6 to 8.5 Ton Units

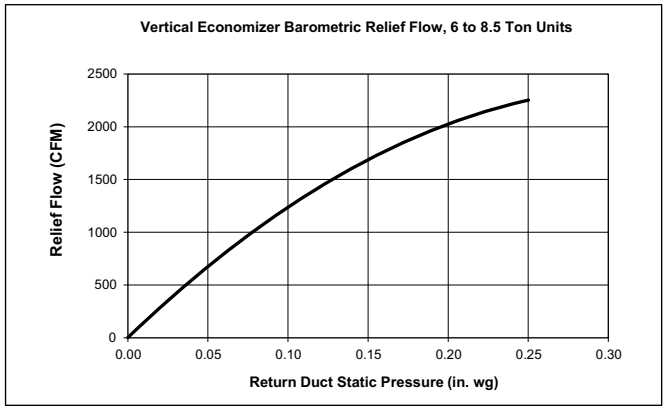

Horizontal Economizer, 10 Ton Units

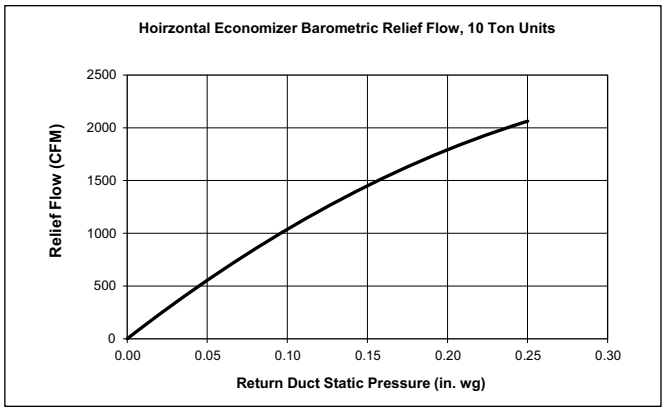

Vertical Economizer, 10 Ton Units

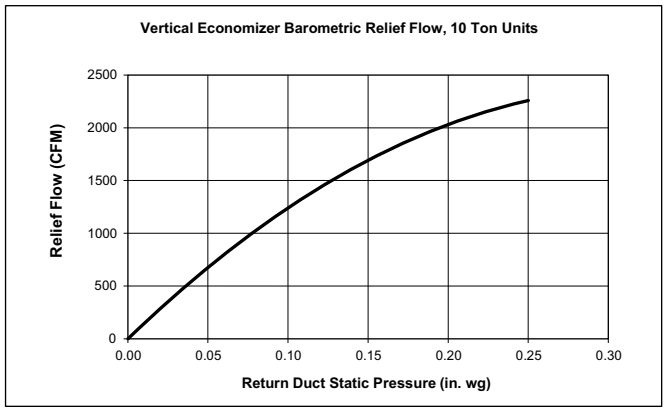

Horizontal Economizer Damper Leakage

Horizontal Damper 6 to 8.5 Ton Units

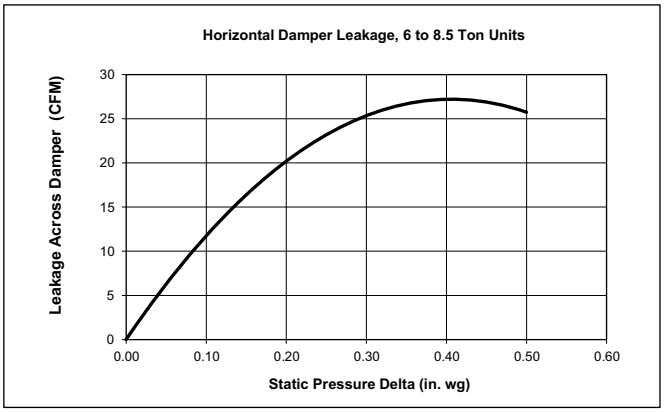

Vertical Damper, 6 to 8.5 Ton Units

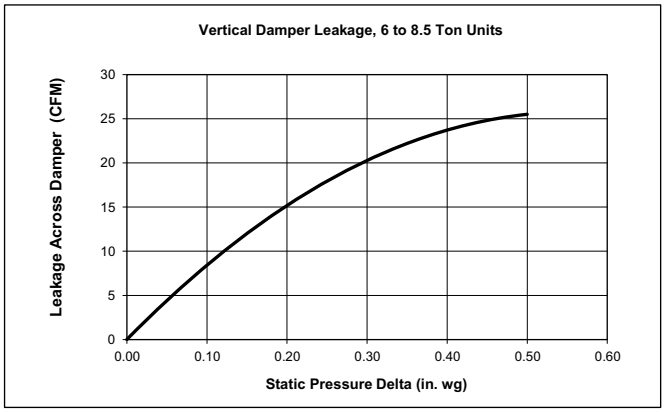

Horizontal Damper, 10 Ton Units

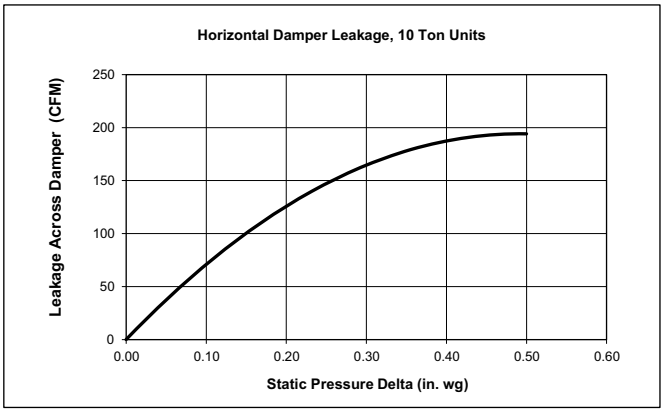

Vertical Damper, 10 Ton Units

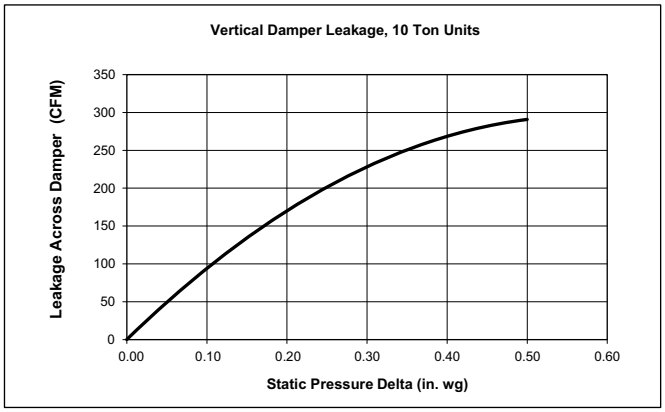

Accessory Static Pressure Drop — Economizer

6 to 8.5 Ton Units

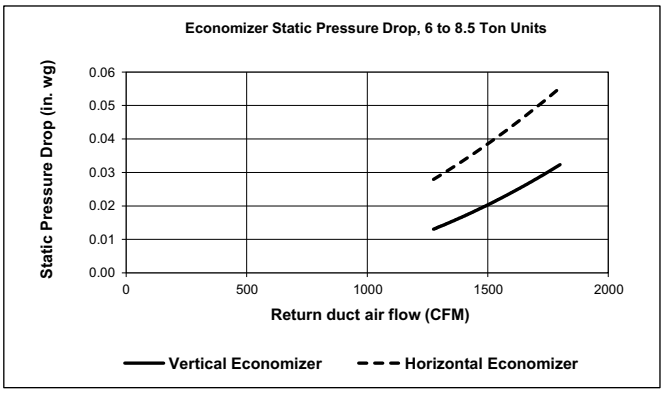

10 Ton Units

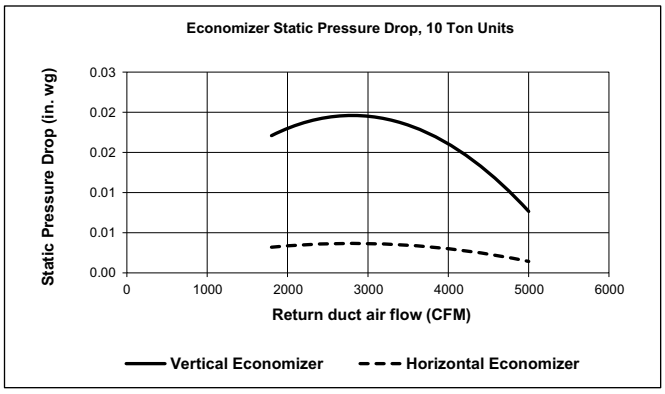

General Fan Performance Notes

1. Interpolation is permissible. Do not extrapolate.
2. External static pressure is the static pressure difference between the return duct and the supply duct plus the static pressure caused by any FIOPs or accessories.
3. Tabular data accounts for pressure loss due to clean filters, unit casing, wet coils, and highest gas heat exchanger (when gas heat unit).
4. Factory options and accessories may effect static pressure losses. Gas heat unit fan tables assume highest gas heat models; for fan selections with low or medium heat models, the user must deduct low and medium heat static pressures. Selection software is available, through your salesperson, to help you select the best motor/drive combination for your application.
5. The fan performance tables offer motor recommendations. In cases when 2 motors would work, Carrier recommends the lower horsepower option.
6. Fan tables include highest gas heat. Utilize static pressure deduction tables on page 43 for lower gas heat capacities.
7. For information on the electrical properties of Carrier motors, please see the Electrical information section of this book.
8. For more information on the performance limits of Carrier motors, see the application data section of this book.
9. The EPACT (Energy Policy Act of 1992) regulates energy requirements for specific types of indoor fan motors. Motors regulated by EPACT include any general purpose, T-frame (3-digit, 143 and larger), single-speed, foot mounted, polyphase, squirrel cage induction motors of NEMA (National Electrical Manufacturers Association) design A and B, manufactured for use in the United States. Ranging from 1 to 200 Hp, these continuous-duty motors operate on 230 and 460 volt, 60 Hz power. If a motor does not fit into these specifications, the motor does not have to be replaced by an EPACT compliant energy-efficient motor. Variable-speed motors are exempt from EPACT compliance requirements.

Fan data (cont)

48QE*M07 — 6 Ton Vertical Supply (rpm - bhp)

CFM	AVAILABLE EXTERNAL STATIC PRESSURE (in. wg)									
	0.2		0.4		0.6		0.8		1.0	
	rpm	bhp	rpm	bhp	rpm	bhp	rpm	bhp	rpm	bhp
1800	855	0.24	990	0.37	1109	0.52	1215	0.68	1311	0.86
1950	902	0.28	1032	0.42	1147	0.57	1250	0.74	1344	0.92
2100	951	0.32	1074	0.47	1186	0.63	1286	0.80	1379	0.99
2250	1001	0.37	1118	0.52	1226	0.69	1324	0.87	1414	1.06
2400	1052	0.43	1164	0.59	1267	0.75	1362	0.94	1451	1.13
2550	1103	0.49	1210	0.65	1310	0.83	1402	1.02	1489	1.22
2700	1155	0.56	1258	0.73	1353	0.91	1443	1.10	1527	1.30
2850	1208	0.64	1306	0.81	1398	0.99	1485	1.19	1567	1.40
3000	1261	0.72	1355	0.90	1444	1.09	1529	1.29	1608	1.50

CFM	AVAILABLE EXTERNAL STATIC PRESSURE (in. wg)									
	1.2		1.4		1.6		1.8		2.0	
	rpm	bhp	rpm	bhp	rpm	bhp	rpm	bhp	rpm	bhp
1800	1400	1.04	1483	1.24	1561	1.45	1635	1.66	1705	1.88
1950	1432	1.11	1513	1.31	1590	1.52	1663	1.74	1733	1.97
2100	1464	1.18	1545	1.39	1621	1.60	1693	1.82	1762	2.06
2250	1498	1.26	1578	1.47	1653	1.69	1724	1.91	1792	2.15
2400	1534	1.34	1611	1.55	1685	1.78	1756	2.01	1823	2.25
2550	1570	1.43	1646	1.64	1719	1.87	1789	2.11	1855	2.35
2700	1607	1.52	1682	1.74	1754	1.98	1822	2.22	1888	2.47
2850	1645	1.62	1719	1.85	1789	2.08	1857	2.33	1922	2.58
3000	1684	1.72	1757	1.96	1826	2.20	1892	2.44	1956	2.70

Standard/Medium Static 855-2000 rpm, 2.4 max bhp

High Static 855-2200 rpm, 3.0 max bhp

48QE*M07 — Standard/Medium Static — 6 Ton Vertical Supply (rpm - vdc)

CFM	AVAILABLE EXTERNAL STATIC PRESSURE (in. wg)									
	0.2		0.4		0.6		0.8		1.0	
	rpm	vdc	rpm	vdc	rpm	vdc	rpm	vdc	rpm	vdc
1800	855	4.1	990	4.8	1109	5.4	1215	6.0	1311	6.5
1950	902	4.4	1032	5.0	1147	5.6	1250	6.1	1344	6.6
2100	951	4.6	1074	5.2	1186	5.8	1286	6.3	1379	6.8
2250	1001	4.9	1118	5.5	1226	6.0	1324	6.5	1414	7.0
2400	1052	5.1	1164	5.7	1267	6.2	1362	6.7	1451	7.2
2550	1103	5.4	1210	5.9	1310	6.5	1402	6.9	1489	7.4
2700	1155	5.7	1258	6.2	1353	6.7	1443	7.1	1527	7.6
2850	1208	5.9	1306	6.4	1398	6.9	1485	7.4	1567	7.8
3000	1261	6.2	1355	6.7	1444	7.1	1529	7.6	1608	8.0

CFM	AVAILABLE EXTERNAL STATIC PRESSURE (in. wg)									
	1.2		1.4		1.6		1.8		2.0	
	rpm	vdc	rpm	vdc	rpm	vdc	rpm	vdc	rpm	vdc
1800	1400	6.9	1483	7.3	1561	7.7	1635	8.1	1705	8.5
1950	1432	7.1	1513	7.5	1590	7.9	1663	8.3	1733	8.6
2100	1464	7.2	1545	7.7	1621	8.1	1693	8.4	1762	8.8
2250	1498	7.4	1578	7.8	1653	8.2	1724	8.6	1792	8.9
2400	1534	7.6	1611	8.0	1685	8.4	1756	8.7	1823	9.1
2550	1570	7.8	1646	8.2	1719	8.6	1789	8.9	1855	9.3
2700	1607	8.0	1682	8.4	1754	8.7	1822	9.1	1888	9.4
2850	1645	8.2	1719	8.6	1789	8.9	1857	9.3	—	—
3000	1684	8.4	1757	8.8	1826	9.1	1892	9.4	—	—

Standard/Medium Static 855-2000 rpm

Fan data (cont)

48QE*M07 — High Static — 6 Ton Vertical Supply (rpm - vdc)

CFM	AVAILABLE EXTERNAL STATIC PRESSURE (in. wg)									
	0.2		0.4		0.6		0.8		1.0	
	rpm	vdc	rpm	vdc	rpm	vdc	rpm	vdc	rpm	vdc
1800	855	3.8	990	4.4	1109	5.0	1215	5.5	1311	5.9
1950	902	4.0	1032	4.6	1147	5.1	1250	5.6	1344	6.0
2100	951	4.2	1074	4.8	1186	5.3	1286	5.8	1379	6.2
2250	1001	4.5	1118	5.0	1226	5.5	1324	6.0	1414	6.4
2400	1052	4.7	1164	5.2	1267	5.7	1362	6.1	1451	6.5
2550	1103	4.9	1210	5.4	1310	5.9	1402	6.3	1489	6.7
2700	1155	5.2	1258	5.7	1353	6.1	1443	6.5	1527	6.9
2850	1208	5.4	1306	5.9	1398	6.3	1485	6.7	1567	7.1
3000	1261	5.7	1355	6.1	1444	6.5	1529	6.9	1608	7.3

CFM	AVAILABLE EXTERNAL STATIC PRESSURE (in. wg)									
	1.2		1.4		1.6		1.8		2.0	
	rpm	vdc	rpm	vdc	rpm	vdc	rpm	vdc	rpm	vdc
1800	1400	6.3	1483	6.7	1561	7.1	1635	7.4	1705	7.7
1950	1432	6.5	1513	6.8	1590	7.2	1663	7.5	1733	7.8
2100	1464	6.6	1545	7.0	1621	7.3	1693	7.7	1762	8.0
2250	1498	6.8	1578	7.1	1653	7.5	1724	7.8	1792	8.1
2400	1534	6.9	1611	7.3	1685	7.6	1756	8.0	1823	8.3
2550	1570	7.1	1646	7.4	1719	7.8	1789	8.1	1855	8.4
2700	1607	7.3	1682	7.6	1754	7.9	1822	8.3	1888	8.6
2850	1645	7.4	1719	7.8	1789	8.1	1857	8.4	1922	8.7
3000	1684	7.6	1757	8.0	1826	8.3	1892	8.6	1956	8.9

High Static 855-2200 rpm

48QE*M08 — 7.5 Ton Vertical Supply (rpm - bhp)

CFM	AVAILABLE EXTERNAL STATIC PRESSURE (in. wg)									
	0.2		0.4		0.6		0.8		1.0	
	rpm	bhp	rpm	bhp	rpm	bhp	rpm	bhp	rpm	bhp
2250	1001	0.37	1118	0.52	1225	0.69	1323	0.86	1414	1.06
2440	1065	0.45	1176	0.60	1278	0.77	1373	0.96	1460	1.15
2625	1129	0.53	1234	0.69	1331	0.87	1422	1.06	1508	1.26
2815	1196	0.62	1295	0.79	1388	0.97	1475	1.17	1558	1.38
3000	1261	0.72	1355	0.90	1444	1.09	1528	1.29	1608	1.50
3190	1329	0.84	1418	1.02	1503	1.21	1584	1.42	1661	1.64
3375	1396	0.96	1481	1.14	1562	1.34	1640	1.55	1715	1.78
3565	1465	1.09	1546	1.28	1624	1.49	1699	1.70	1771	1.93
3750	1533	1.23	1610	1.42	1685	1.63	1757	1.85	1826	2.08

CFM	AVAILABLE EXTERNAL STATIC PRESSURE (in. wg)									
	1.2		1.4		1.6		1.8		2.0	
	rpm	bhp	rpm	bhp	rpm	bhp	rpm	bhp	rpm	bhp
2250	1498	1.26	1578	1.47	1653	1.69	1724	1.91	1792	2.15
2440	1543	1.36	1620	1.58	1694	1.80	1765	2.04	1832	2.28
2625	1588	1.47	1664	1.69	1736	1.92	1805	2.16	1871	2.41
2815	1636	1.60	1710	1.82	1781	2.06	1849	2.30	1914	2.55
3000	1684	1.72	1757	1.96	1826	2.20	1892	2.44	1957	2.70
3190	1735	1.86	1806	2.10	1873	2.34	1939	2.60	2001	2.86
3375	1786	2.01	1855	2.25	1921	2.50	1985	2.76	2047	3.02
3565	1840	2.16	1907	2.41	1972	2.66	2034	2.92	2094	3.19
3750	1894	2.32	1959	2.56	2022	2.82	2083	3.08	—	—

Standard/Medium Static 1001-2000 rpm, 2.4 max bhp

High Static 1001-2200 rpm, 3.0 max bhp

48QE*M08 — Standard/Medium Static — 7.5 Ton Vertical Supply (rpm - vdc)

CFM	AVAILABLE EXTERNAL STATIC PRESSURE (in. wg)									
	0.2		0.4		0.6		0.8		1.0	
	rpm	vdc	rpm	vdc	rpm	vdc	rpm	vdc	rpm	vdc
2250	1001	4.9	1118	5.5	1225	6.0	1323	6.5	1414	7.0
2440	1065	5.2	1176	5.8	1278	6.3	1373	6.8	1460	7.2
2625	1129	5.5	1234	6.1	1331	6.6	1422	7.0	1508	7.5
2815	1196	5.9	1295	6.4	1388	6.9	1475	7.3	1558	7.7
3000	1261	6.2	1355	6.7	1444	7.1	1528	7.6	1608	8.0
3190	1329	6.5	1418	7.0	1503	7.4	1584	7.9	1661	8.3
3375	1396	6.9	1481	7.3	1562	7.7	1640	8.1	1715	8.5
3565	1465	7.2	1546	7.7	1624	8.1	1699	8.5	1771	8.8
3750	1533	7.6	1610	8.0	1685	8.4	1757	8.8	1826	9.1

CFM	AVAILABLE EXTERNAL STATIC PRESSURE (in. wg)									
	1.2		1.4		1.6		1.8		2.0	
	rpm	vdc	rpm	vdc	rpm	vdc	rpm	vdc	rpm	vdc
2250	1498	7.4	1578	7.8	1653	8.2	1724	8.6	1792	8.9
2440	1543	7.6	1620	8.0	1694	8.4	1765	8.8	1832	9.1
2625	1588	7.9	1664	8.3	1736	8.6	1805	9.0	1871	9.3
2815	1636	8.1	1710	8.5	1781	8.9	1849	9.2	—	—
3000	1684	8.4	1757	8.8	1826	9.1	1892	9.4	—	—
3190	1735	8.6	1806	9.0	1873	9.3	—	—	—	—
3375	1786	8.9	1855	9.3	1921	9.6	—	—	—	—
3565	1840	9.2	1907	9.5	—	—	—	—	—	—
3750	1894	9.5	—	—	—	—	—	—	—	—

Standard/Medium Static 1001-2000 rpm

Fan data (cont)

48QE*M08 — High Static — 7.5 Ton Vertical Supply (rpm - vdc)

CFM	AVAILABLE EXTERNAL STATIC PRESSURE (in. wg)									
	0.2		0.4		0.6		0.8		1.0	
	rpm	vdc	rpm	vdc	rpm	vdc	rpm	vdc	rpm	vdc
2250	1001	4.5	1118	5.0	1225	5.5	1323	6.0	1414	6.4
2440	1065	4.8	1176	5.3	1278	5.7	1373	6.2	1460	6.6
2625	1129	5.1	1234	5.5	1331	6.0	1422	6.4	1508	6.8
2815	1196	5.4	1295	5.8	1388	6.3	1475	6.7	1558	7.0
3000	1261	5.7	1355	6.1	1444	6.5	1528	6.9	1608	7.3
3190	1329	6.0	1418	6.4	1503	6.8	1584	7.2	1661	7.5
3375	1396	6.3	1481	6.7	1562	7.1	1640	7.4	1715	7.8
3565	1465	6.6	1546	7.0	1624	7.3	1699	7.7	1771	8.0
3750	1533	6.9	1610	7.3	1685	7.6	1757	8.0	1826	8.3

CFM	AVAILABLE EXTERNAL STATIC PRESSURE (in. wg)									
	1.2		1.4		1.6		1.8		2.0	
	rpm	vdc	rpm	vdc	rpm	vdc	rpm	vdc	rpm	vdc
2250	1498	6.8	1578	7.1	1653	7.5	1724	7.8	1792	8.1
2440	1543	7.0	1620	7.3	1694	7.7	1765	8.0	1832	8.3
2625	1588	7.2	1664	7.5	1736	7.9	1805	8.2	1871	8.5
2815	1636	7.4	1710	7.7	1781	8.1	1849	8.4	1914	8.7
3000	1684	7.6	1757	8.0	1826	8.3	1892	8.6	1957	8.9
3190	1735	7.9	1806	8.2	1873	8.5	1939	8.8	2001	9.1
3375	1786	8.1	1855	8.4	1921	8.7	1985	9.0	2047	9.3
3565	1840	8.3	1907	8.6	1972	8.9	2034	9.2	2094	9.5
3750	1894	8.6	1959	8.9	2022	9.2	2083	9.5	—	—

High Static 1001-2200 rpm

48QE*M09 — 8.5 Ton Vertical Supply (rpm - bhp)

CFM	AVAILABLE EXTERNAL STATIC PRESSURE (in. wg)									
	0.2		0.4		0.6		0.8		1.0	
	rpm	bhp	rpm	bhp	rpm	bhp	rpm	bhp	rpm	bhp
2550	1108	0.51	1215	0.67	1314	0.85	1406	1.04	1493	1.24
2765	1183	0.61	1283	0.78	1378	0.97	1466	1.17	1549	1.38
2975	1258	0.73	1352	0.91	1442	1.10	1526	1.30	1606	1.52
3190	1335	0.87	1424	1.05	1509	1.25	1590	1.46	1667	1.69
3400	1411	1.01	1495	1.20	1576	1.41	1654	1.63	1728	1.86
3615	1490	1.18	1570	1.38	1647	1.59	1721	1.82	1792	2.05
3825	1567	1.35	1643	1.56	1716	1.78	1788	2.01	1856	2.25
4040	1647	1.55	1719	1.76	1789	1.98	1857	2.22	1923	2.46
4250	1725	1.74	1794	1.96	1861	2.19	1926	2.43	1990	2.68

CFM	AVAILABLE EXTERNAL STATIC PRESSURE (in. wg)									
	1.2		1.4		1.6		1.8		2.0	
	rpm	bhp	rpm	bhp	rpm	bhp	rpm	bhp	rpm	bhp
2550	1574	1.46	1650	1.68	1723	1.91	1793	2.15	1859	2.40
2765	1628	1.60	1703	1.83	1774	2.07	1842	2.31	1907	2.57
2975	1683	1.75	1755	1.98	1825	2.23	1891	2.48	1955	2.74
3190	1741	1.92	1811	2.16	1879	2.41	1944	2.67	2007	2.94
3400	1799	2.10	1868	2.35	1934	2.61	1997	2.87	2059	3.15
3615	1861	2.30	1927	2.55	1991	2.81	2053	3.08	2113	3.36
3825	1923	2.50	1987	2.76	2049	3.02	2110	3.30	2168	3.58
4040	1987	2.72	2050	2.98	2110	3.25	2169	3.53	—	—
4250	2052	2.94	2112	3.20	2171	3.48	—	—	—	—

Standard/Medium Static 1108-2000 rpm, 2.4 max bhp

High Static 1108-2200 rpm, 3.0 max bhp

48QE*M09 — Standard/Medium Static — 8.5 Ton Vertical Supply (rpm - vdc)

CFM	AVAILABLE EXTERNAL STATIC PRESSURE (in. wg)									
	0.2		0.4		0.6		0.8		1.0	
	rpm	vdc	rpm	vdc	rpm	vdc	rpm	vdc	rpm	vdc
2550	1108	5.4	1215	6.0	1314	6.5	1406	6.9	1493	7.4
2765	1183	5.8	1283	6.3	1378	6.8	1466	7.3	1549	7.7
2975	1258	6.2	1352	6.7	1442	7.1	1526	7.6	1606	8.0
3190	1335	6.6	1424	7.0	1509	7.5	1590	7.9	1667	8.3
3400	1411	7.0	1495	7.4	1576	7.8	1654	8.2	1728	8.6
3615	1490	7.4	1570	7.8	1647	8.2	1721	8.6	1792	8.9
3825	1567	7.8	1643	8.2	1716	8.5	1788	8.9	1856	9.3
4040	1647	8.2	1719	8.6	1789	8.9	1857	9.3	1923	9.6
4250	1725	8.6	1794	8.9	1861	9.3	1926	9.6	—	—

CFM	AVAILABLE EXTERNAL STATIC PRESSURE (in. wg)									
	1.2		1.4		1.6		1.8		2.0	
	rpm	vdc	rpm	vdc	rpm	vdc	rpm	vdc	rpm	vdc
2550	1574	7.8	1650	8.2	1723	8.6	1793	8.9	1859	9.3
2765	1628	8.1	1703	8.5	1774	8.8	1842	9.2	—	—
2975	1683	8.4	1755	8.7	1825	9.1	1891	9.4	—	—
3190	1741	8.7	1811	9.0	1879	9.4	—	—	—	—
3400	1799	9.0	1868	9.3	—	—	—	—	—	—
3615	1861	9.3	1927	9.6	—	—	—	—	—	—
3825	1923	9.6	—	—	—	—	—	—	—	—
4040	—	—	—	—	—	—	—	—	—	—
4250	—	—	—	—	—	—	—	—	—	—

Standard/Medium Static 1108-2000 rpm

Fan data (cont)

48QE*M09 — High Static — 8.5 Ton Vertical Supply (rpm - vdc)

CFM	AVAILABLE EXTERNAL STATIC PRESSURE (in. wg)									
	0.2		0.4		0.6		0.8		1.0	
	rpm	vdc	rpm	vdc	rpm	vdc	rpm	vdc	rpm	vdc
2550	1108	5.0	1215	5.5	1314	5.9	1406	6.3	1493	6.7
2765	1183	5.3	1283	5.8	1378	6.2	1466	6.6	1549	7.0
2975	1258	5.7	1352	6.1	1442	6.5	1526	6.9	1606	7.3
3190	1335	6.0	1424	6.4	1509	6.8	1590	7.2	1667	7.5
3400	1411	6.4	1495	6.7	1576	7.1	1654	7.5	1728	7.8
3615	1490	6.7	1570	7.1	1647	7.4	1721	7.8	1792	8.1
3825	1567	7.1	1643	7.4	1716	7.8	1788	8.1	1856	8.4
4040	1647	7.4	1719	7.8	1789	8.1	1857	8.4	1923	8.7
4250	1725	7.8	1794	8.1	1861	8.4	1926	8.7	1990	9.0

CFM	AVAILABLE EXTERNAL STATIC PRESSURE (in. wg)									
	1.2		1.4		1.6		1.8		2.0	
	rpm	vdc	rpm	vdc	rpm	vdc	rpm	vdc	rpm	vdc
2550	1574	7.1	1650	7.5	1723	7.8	1793	8.1	1859	8.4
2765	1628	7.4	1703	7.7	1774	8.0	1842	8.3	1907	8.6
2975	1683	7.6	1755	7.9	1825	8.3	1891	8.6	1955	8.9
3190	1741	7.9	1811	8.2	1879	8.5	1944	8.8	2007	9.1
3400	1799	8.1	1868	8.5	1934	8.8	1997	9.1	2059	9.3
3615	1861	8.4	1927	8.7	1991	9.0	2053	9.3	2113	9.6
3825	1923	8.7	1987	9.0	2049	9.3	2110	9.6	2168	9.9
4040	1987	9.0	2050	9.3	2110	9.6	2169	9.9	—	—
4250	2052	9.3	2112	9.6	2171	9.9	—	—	—	—

High Static 1108-2200 rpm

48QE*M12 — 10 Ton Vertical Supply (rpm - bhp)

CFM	AVAILABLE EXTERNAL STATIC PRESSURE (in. wg)									
	0.2		0.4		0.6		0.8		1.0	
	rpm	bhp	rpm	bhp	rpm	bhp	rpm	bhp	rpm	bhp
3000	1123	0.58	1223	0.74	1320	0.94	1412	1.15	1499	1.37
3250	1196	0.68	1290	0.86	1381	1.05	1468	1.27	1552	1.50
3500	1270	0.80	1358	0.98	1443	1.18	1526	1.39	1606	1.63
3750	1346	0.93	1428	1.11	1508	1.31	1587	1.53	1663	1.76
4000	1421	1.07	1499	1.25	1575	1.45	1649	1.67	1722	1.90
4250	1498	1.21	1571	1.39	1643	1.59	1714	1.81	1783	2.03
4500	1574	1.35	1644	1.54	1712	1.73	1780	1.95	1846	2.17
4750	1652	1.50	1718	1.69	1783	1.89	1847	2.10	1910	2.32
5000	1729	1.66	1792	1.85	1854	2.05	1916	2.27	1976	2.49

CFM	AVAILABLE EXTERNAL STATIC PRESSURE (in. wg)									
	1.2		1.4		1.6		1.8		2.0	
	rpm	bhp	rpm	bhp	rpm	bhp	rpm	bhp	rpm	bhp
3000	1581	1.61	1658	1.85	1730	2.11	1799	2.37	1865	2.64
3250	1631	1.74	1706	1.99	1778	2.25	1846	2.52	1911	2.79
3500	1683	1.87	1757	2.13	1827	2.39	1894	2.67	1959	2.95
3750	1737	2.01	1808	2.26	1877	2.53	1943	2.81	2006	3.09
4000	1793	2.14	1862	2.40	1929	2.67	1993	2.94	2055	3.22
4250	1851	2.28	1917	2.53	1982	2.79	2045	3.07	2106	3.35
4500	1911	2.41	1975	2.66	2037	2.92	2098	3.19	2158	3.47
4750	1973	2.55	2034	2.80	2094	3.05	2153	3.32	—	—
5000	2036	2.72	2095	2.96	2153	3.21	—	—	—	—

Standard/Medium Static 1123-2000 rpm, 2.4 max bhp

High Static 1123-200 rpm, 5.0 max bhp

48QE*M12 — Standard/Medium Static — 10 Ton Vertical Supply (rpm - vdc)

CFM	AVAILABLE EXTERNAL STATIC PRESSURE (in. wg)									
	0.2		0.4		0.6		0.8		1.0	
	rpm	vdc	rpm	vdc	rpm	vdc	rpm	vdc	rpm	vdc
3000	1123	5.5	1223	6.0	1320	6.5	1412	7.0	1499	7.4
3250	1196	5.9	1290	6.3	1381	6.8	1468	7.3	1552	7.7
3500	1270	6.2	1358	6.7	1443	7.1	1526	7.6	1606	8.0
3750	1346	6.6	1428	7.1	1508	7.5	1587	7.9	1663	8.3
4000	1421	7.0	1499	7.4	1575	7.8	1649	8.2	1722	8.6
4250	1498	7.4	1571	7.8	1643	8.2	1714	8.5	1783	8.9
4500	1574	7.8	1644	8.2	1712	8.5	1780	8.9	1846	9.2
4750	1652	8.2	1718	8.5	1783	8.9	1847	9.2	1910	9.5
5000	1729	8.6	1792	8.9	1854	9.2	1916	9.6	1976	9.9

CFM	AVAILABLE EXTERNAL STATIC PRESSURE (in. wg)									
	1.2		1.4		1.6		1.8		2.0	
	rpm	vdc	rpm	vdc	rpm	vdc	rpm	vdc	rpm	vdc
3000	1581	7.8	1658	8.2	1730	8.6	1799	9.0	—	—
3250	1631	8.1	1706	8.5	1778	8.9	1846	9.2	—	—
3500	1683	8.4	1757	8.8	1827	9.1	—	—	—	—
3750	1737	8.6	1808	9.0	1877	9.4	—	—	—	—
4000	1793	8.9	1862	9.3	—	—	—	—	—	—
4250	1851	9.2	1917	9.6	—	—	—	—	—	—
4500	1911	9.5	—	—	—	—	—	—	—	—
4750	—	—	—	—	—	—	—	—	—	—
5000	—	—	—	—	—	—	—	—	—	—

Standard/Medium Static 1123-2000 rpm

48QE*M12 — High Static — 10 Ton Vertical Supply (rpm - vdc)

CFM	AVAILABLE EXTERNAL STATIC PRESSURE (in. wg)									
	0.2		0.4		0.6		0.8		1.0	
	rpm	vdc	rpm	vdc	rpm	vdc	rpm	vdc	rpm	vdc
3000	1123	5.0	1223	5.5	1320	5.9	1412	6.4	1499	6.8
3250	1196	5.4	1290	5.8	1381	6.2	1468	6.6	1552	7.0
3500	1270	5.7	1358	6.1	1443	6.5	1526	6.9	1606	7.3
3750	1346	6.1	1428	6.4	1508	6.8	1587	7.2	1663	7.5
4000	1421	6.4	1499	6.8	1575	7.1	1649	7.5	1722	7.8
4250	1498	6.8	1571	7.1	1643	7.4	1714	7.8	1783	8.1
4500	1574	7.1	1644	7.4	1712	7.7	1780	8.1	1846	8.4
4750	1652	7.5	1718	7.8	1783	8.1	1847	8.4	1910	8.7
5000	1729	7.8	1792	8.1	1854	8.4	1916	8.7	1976	9.0

CFM	AVAILABLE EXTERNAL STATIC PRESSURE (in. wg)									
	1.2		1.4		1.6		1.8		2.0	
	rpm	vdc	rpm	vdc	rpm	vdc	rpm	vdc	rpm	vdc
3000	1581	7.1	1658	7.5	1730	7.8	1799	8.1	1865	8.5
3250	1631	7.4	1706	7.7	1778	8.1	1846	8.4	1911	8.7
3500	1683	7.6	1757	8.0	1827	8.3	1894	8.6	1959	8.9
3750	1737	7.9	1808	8.2	1877	8.5	1943	8.8	2006	9.1
4000	1793	8.1	1862	8.4	1929	8.7	1993	9.0	2055	9.3
4250	1851	8.4	1917	8.7	1982	9.0	2045	9.3	2106	9.6
4500	1911	8.7	1975	9.0	2037	9.2	2098	9.5	2158	9.8
4750	1973	9.0	2034	9.2	2094	9.5	2153	9.8	—	—
5000	2036	9.2	2095	9.5	2153	9.8	—	—	—	—

High Static 1123-2200 rpm

48QE*M07 — 6 Ton Horizontal Supply (rpm — bhp)

CFM	AVAILABLE EXTERNAL STATIC PRESSURE (in. wg)									
	0.2		0.4		0.6		0.8		1.0	
	rpm	bhp	rpm	bhp	rpm	bhp	rpm	bhp	rpm	bhp
1800	844	0.23	987	0.37	1110	0.52	1219	0.69	1317	0.87
1950	885	0.26	1022	0.40	1142	0.56	1250	0.74	1347	0.92
2100	927	0.30	1058	0.44	1175	0.61	1281	0.79	1377	0.98
2250	970	0.34	1095	0.49	1209	0.66	1312	0.84	1407	1.04
2400	1014	0.39	1133	0.54	1244	0.71	1345	0.90	1438	1.10
2550	1059	0.44	1173	0.59	1279	0.77	1378	0.96	1470	1.17
2700	1105	0.49	1213	0.65	1316	0.83	1412	1.03	1502	1.24
2850	1151	0.55	1255	0.72	1354	0.90	1447	1.10	1535	1.31
3000	1198	0.62	1297	0.79	1392	0.97	1483	1.18	1569	1.39

CFM	AVAILABLE EXTERNAL STATIC PRESSURE (in. wg)									
	1.2		1.4		1.6		1.8		2.0	
	rpm	bhp	rpm	bhp	rpm	bhp	rpm	bhp	rpm	bhp
1800	1407	1.06	1490	1.26	1568	1.47	1641	1.68	1711	1.91
1950	1436	1.12	1519	1.32	1596	1.53	1669	1.76	1739	1.99
2100	1465	1.18	1547	1.39	1624	1.60	1697	1.83	1766	2.06
2250	1495	1.24	1576	1.46	1653	1.68	1725	1.91	1794	2.15
2400	1525	1.31	1605	1.53	1682	1.76	1754	1.99	1822	2.23
2550	1555	1.38	1635	1.61	1711	1.84	1783	2.08	1851	2.33
2700	1586	1.46	1665	1.69	1740	1.92	1812	2.17	1879	2.42
2850	1618	1.54	1696	1.77	1770	2.01	1841	2.27	1908	2.52
3000	1650	1.62	1727	1.86	1801	2.11	1871	2.37	1938	2.63

Standard/Medium Static 844-2000 rpm, 2.4 max bhp

High Static 844-2200 rpm, 3.0 max bhp

48QE*M07 — Standard/Medium Static — 6 Ton Horizontal Supply (rpm — vdc)

CFM	AVAILABLE EXTERNAL STATIC PRESSURE (in. wg)									
	0.2		0.4		0.6		0.8		1.0	
	rpm	vdc	rpm	vdc	rpm	vdc	rpm	vdc	rpm	vdc
1800	815	3.9	962	4.7	1089	5.3	1200	5.9	1300	6.4
1950	857	4.1	997	4.8	1121	5.5	1230	6.0	1329	6.5
2100	901	4.3	1034	5.0	1154	5.6	1262	6.2	1359	6.7
2250	946	4.6	1073	5.2	1188	5.8	1294	6.4	1390	6.9
2400	992	4.8	1112	5.4	1224	6.0	1327	6.5	1421	7.0
2550	1039	5.1	1153	5.6	1261	6.2	1361	6.7	1454	7.2
2700	1086	5.3	1195	5.9	1299	6.4	1396	6.9	1487	7.4
2850	1134	5.5	1239	6.1	1338	6.6	1433	7.1	1521	7.5
3000	1183	5.8	1283	6.3	1379	6.8	1470	7.3	1557	7.7

CFM	AVAILABLE EXTERNAL STATIC PRESSURE (in. wg)									
	1.2		1.4		1.6		1.8		2.0	
	rpm	vdc	rpm	vdc	rpm	vdc	rpm	vdc	rpm	vdc
1800	1391	6.9	1475	7.3	1554	7.7	1628	8.1	1698	8.4
1950	1420	7.0	1503	7.4	1582	7.9	1656	8.2	1726	8.6
2100	1449	7.2	1532	7.6	1610	8.0	1684	8.4	1753	8.7
2250	1479	7.3	1561	7.7	1639	8.1	1712	8.5	1782	8.9
2400	1509	7.5	1591	7.9	1668	8.3	1741	8.7	1810	9.0
2550	1540	7.6	1621	8.1	1698	8.4	1770	8.8	1839	9.2
2700	1572	7.8	1652	8.2	1728	8.6	1800	9.0	1868	9.3
2850	1605	8.0	1684	8.4	1759	8.8	1830	9.1	1898	9.5
3000	1639	8.1	1716	8.5	1790	8.9	1861	9.3	—	—

Standard/Medium Static 844-2000 rpm

48QE*M07 — High Static — 6 Ton Horizontal Supply (rpm — vdc)

CFM	AVAILABLE EXTERNAL STATIC PRESSURE (in. wg)									
	0.2		0.4		0.6		0.8		1.0	
	rpm	vdc	rpm	vdc	rpm	vdc	rpm	vdc	rpm	vdc
1800	815	3.6	962	4.3	1089	4.9	1200	5.4	1300	5.8
1950	857	3.8	997	4.4	1121	5.0	1230	5.5	1329	6.0
2100	901	4.0	1034	4.6	1154	5.2	1262	5.7	1359	6.1
2250	946	4.2	1073	4.8	1188	5.3	1294	5.8	1390	6.3
2400	992	4.4	1112	5.0	1224	5.5	1327	6.0	1421	6.4
2550	1039	4.6	1153	5.2	1261	5.7	1361	6.1	1454	6.6
2700	1086	4.9	1195	5.4	1299	5.8	1396	6.3	1487	6.7
2850	1134	5.1	1239	5.6	1338	6.0	1433	6.5	1521	6.9
3000	1183	5.3	1283	5.8	1379	6.2	1470	6.6	1557	7.0

CFM	AVAILABLE EXTERNAL STATIC PRESSURE (in. wg)									
	1.2		1.4		1.6		1.8		2.0	
	rpm	vdc	rpm	vdc	rpm	vdc	rpm	vdc	rpm	vdc
1800	1391	6.3	1475	6.7	1554	7.0	1628	7.4	1698	7.7
1950	1420	6.4	1503	6.8	1582	7.1	1656	7.5	1726	7.8
2100	1449	6.5	1532	6.9	1610	7.3	1684	7.6	1753	7.9
2250	1479	6.7	1561	7.1	1639	7.4	1712	7.7	1782	8.1
2400	1509	6.8	1591	7.2	1668	7.5	1741	7.9	1810	8.2
2550	1540	7.0	1621	7.3	1698	7.7	1770	8.0	1839	8.3
2700	1572	7.1	1652	7.5	1728	7.8	1800	8.2	1868	8.5
2850	1605	7.3	1684	7.6	1759	8.0	1830	8.3	1898	8.6
3000	1639	7.4	1716	7.8	1790	8.1	1861	8.4	1928	8.7

High Static 844-2200 rpm

48QE*M08 — 7.5 Ton Horizontal Supply (rpm — bhp)

CFM	AVAILABLE EXTERNAL STATIC PRESSURE (in. wg)									
	0.2		0.4		0.6		0.8		1.0	
	rpm	bhp	rpm	bhp	rpm	bhp	rpm	bhp	rpm	bhp
2250	946	0.31	1072	0.46	1188	0.62	1294	0.81	1390	1.00
2440	1004	0.37	1123	0.52	1234	0.69	1336	0.88	1430	1.08
2625	1062	0.44	1174	0.59	1280	0.77	1379	0.96	1471	1.17
2815	1123	0.52	1229	0.68	1329	0.85	1424	1.05	1513	1.26
3000	1183	0.60	1283	0.76	1379	0.95	1470	1.15	1557	1.36
3190	1246	0.69	1340	0.86	1431	1.05	1519	1.25	1603	1.47
3375	1307	0.79	1397	0.96	1484	1.16	1568	1.36	1649	1.59
3565	1371	0.90	1456	1.07	1539	1.27	1620	1.48	1698	1.70
3750	1433	1.00	1514	1.19	1594	1.38	1671	1.59	1747	1.82

CFM	AVAILABLE EXTERNAL STATIC PRESSURE (in. wg)									
	1.2		1.4		1.6		1.8		2.0	
	rpm	bhp	rpm	bhp	rpm	bhp	rpm	bhp	rpm	bhp
2250	1479	1.20	1561	1.41	1639	1.64	1712	1.87	1782	2.10
2440	1518	1.29	1599	1.51	1676	1.74	1749	1.97	1818	2.22
2625	1556	1.38	1637	1.61	1713	1.84	1785	2.08	1854	2.33
2815	1597	1.48	1677	1.72	1752	1.96	1823	2.20	1891	2.46
3000	1639	1.59	1716	1.82	1790	2.07	1861	2.33	1928	2.59
3190	1682	1.70	1759	1.95	1831	2.20	1901	2.46	1967	2.72
3375	1726	1.82	1801	2.07	1872	2.32	1940	2.58	2006	2.85
3565	1773	1.94	1845	2.19	1915	2.44	1982	2.71	2047	2.99
3750	1820	2.06	1890	2.31	1958	2.56	2024	2.83	2088	3.11

Standard/Medium Static 946-2000 rpm, 2.4 max bhp

High Static 946-2200 rpm, 3.0 max bhp

48QE*M08 — Standard/Medium Static — 7.5 Ton Horizontal Supply (rpm — vdc)

CFM	AVAILABLE EXTERNAL STATIC PRESSURE (in. wg)									
	0.2		0.4		0.6		0.8		1.0	
	rpm	vdc	rpm	vdc	rpm	vdc	rpm	vdc	rpm	vdc
2250	946	4.6	1072	5.2	1188	5.8	1294	6.4	1390	6.9
2440	1004	4.9	1123	5.5	1234	6.1	1336	6.6	1430	7.1
2625	1062	5.2	1174	5.8	1280	6.3	1379	6.8	1471	7.3
2815	1123	5.5	1229	6.0	1329	6.5	1424	7.0	1513	7.5
3000	1183	5.8	1283	6.3	1379	6.8	1470	7.3	1557	7.7
3190	1246	6.1	1340	6.6	1431	7.1	1519	7.5	1603	8.0
3375	1307	6.4	1397	6.9	1484	7.3	1568	7.8	1649	8.2
3565	1371	6.8	1456	7.2	1539	7.6	1620	8.0	1698	8.4
3750	1433	7.1	1514	7.5	1594	7.9	1671	8.3	1747	8.7

CFM	AVAILABLE EXTERNAL STATIC PRESSURE (in. wg)									
	1.2		1.4		1.6		1.8		2.0	
	rpm	vdc	rpm	vdc	rpm	vdc	rpm	vdc	rpm	vdc
2250	1479	7.3	1561	7.7	1639	8.1	1712	8.5	1782	8.9
2440	1518	7.5	1599	7.9	1676	8.3	1749	8.7	1818	9.1
2625	1556	7.7	1637	8.1	1713	8.5	1785	8.9	1854	9.2
2815	1597	7.9	1677	8.3	1752	8.7	1823	9.1	1891	9.4
3000	1639	8.1	1716	8.5	1790	8.9	1861	9.3	—	—
3190	1682	8.4	1759	8.8	1831	9.1	1901	9.5	—	—
3375	1726	8.6	1801	9.0	1872	9.3	—	—	—	—
3565	1773	8.8	1845	9.2	1915	9.6	—	—	—	—
3750	1820	9.1	1890	9.4	—	—	—	—	—	—

Standard/Medium Static 946-2000 rpm

48QE*M08 — High Static — 7.5 Ton Horizontal Supply (rpm — vdc)

CFM	AVAILABLE EXTERNAL STATIC PRESSURE (in. wg)									
	0.2		0.4		0.6		0.8		1.0	
	rpm	vdc	rpm	vdc	rpm	vdc	rpm	vdc	rpm	vdc
2250	946	4.2	1072	4.8	1188	5.3	1294	5.8	1390	6.3
2440	1004	4.5	1123	5.0	1234	5.5	1336	6.0	1430	6.4
2625	1062	4.7	1174	5.3	1280	5.8	1379	6.2	1471	6.6
2815	1123	5.0	1229	5.5	1329	6.0	1424	6.4	1513	6.8
3000	1183	5.3	1283	5.8	1379	6.2	1470	6.6	1557	7.0
3190	1246	5.6	1340	6.0	1431	6.5	1519	6.9	1603	7.2
3375	1307	5.9	1397	6.3	1484	6.7	1568	7.1	1649	7.5
3565	1371	6.2	1456	6.6	1539	6.9	1620	7.3	1698	7.7
3750	1433	6.5	1514	6.8	1594	7.2	1671	7.6	1747	7.9

CFM	AVAILABLE EXTERNAL STATIC PRESSURE (in. wg)									
	1.2		1.4		1.6		1.8		2.0	
	rpm	vdc	rpm	vdc	rpm	vdc	rpm	vdc	rpm	vdc
2250	1479	6.7	1561	7.1	1639	7.4	1712	7.7	1782	8.1
2440	1518	6.9	1599	7.2	1676	7.6	1749	7.9	1818	8.2
2625	1556	7.0	1637	7.4	1713	7.8	1785	8.1	1854	8.4
2815	1597	7.2	1677	7.6	1752	7.9	1823	8.3	1891	8.6
3000	1639	7.4	1716	7.8	1790	8.1	1861	8.4	1928	8.7
3190	1682	7.6	1759	8.0	1831	8.3	1901	8.6	1967	8.9
3375	1726	7.8	1801	8.2	1872	8.5	1940	8.8	2006	9.1
3565	1773	8.0	1845	8.4	1915	8.7	1982	9.0	2047	9.3
3750	1820	8.2	1890	8.6	1958	8.9	2024	9.2	2088	9.5

High Static 946-2200 rpm

48QE*M09 — 8.5 Ton Horizontal Supply (rpm — bhp)

CFM	AVAILABLE EXTERNAL STATIC PRESSURE (in. wg)									
	0.2		0.4		0.6		0.8		1.0	
	rpm	bhp	rpm	bhp	rpm	bhp	rpm	bhp	rpm	bhp
2550	1043	0.42	1158	0.58	1265	0.76	1365	0.95	1458	1.16
2765	1112	0.51	1219	0.67	1321	0.85	1417	1.05	1507	1.27
2975	1180	0.60	1281	0.77	1377	0.96	1469	1.16	1556	1.38
3190	1251	0.71	1345	0.89	1437	1.08	1524	1.29	1608	1.51
3400	1321	0.83	1411	1.01	1497	1.21	1581	1.42	1661	1.65
3615	1394	0.97	1478	1.15	1560	1.35	1640	1.57	1717	1.80
3825	1465	1.11	1545	1.30	1623	1.50	1699	1.72	1774	1.96
4040	1539	1.26	1614	1.46	1689	1.67	1762	1.89	1833	2.13
4250	1611	1.42	1683	1.62	1754	1.83	1824	2.06	1892	2.30

CFM	AVAILABLE EXTERNAL STATIC PRESSURE (in. wg)									
	1.2		1.4		1.6		1.8		2.0	
	rpm	bhp	rpm	bhp	rpm	bhp	rpm	bhp	rpm	bhp
2550	1545	1.38	1626	1.60	1702	1.84	1774	2.08	1843	2.34
2765	1591	1.49	1671	1.73	1746	1.97	1818	2.22	1886	2.48
2975	1638	1.61	1716	1.86	1790	2.11	1861	2.37	1928	2.63
3190	1688	1.75	1764	2.00	1837	2.26	1906	2.52	1973	2.80
3400	1738	1.89	1813	2.15	1884	2.41	1952	2.68	2017	2.96
3615	1792	2.05	1864	2.31	1933	2.57	2000	2.85	2064	3.13
3825	1846	2.21	1915	2.47	1983	2.74	2048	3.02	2111	3.31
4040	1902	2.38	1970	2.65	2035	2.92	2099	3.20	2161	3.49
4250	1959	2.56	2025	2.82	2088	3.09	2150	3.38	—	—

Standard/Medium Static 1043-2000 rpm, 2.4 max bhp

High Static 1043-2200 rpm, 3.0 max bhp

48QE*M09 — Standard/Medium Static — 8.5 Ton Horizontal Supply (rpm — vdc)

CFM	AVAILABLE EXTERNAL STATIC PRESSURE (in. wg)									
	0.2		0.4		0.6		0.8		1.0	
	rpm	vdc	rpm	vdc	rpm	vdc	rpm	vdc	rpm	vdc
2550	1043	5.1	1158	5.7	1265	6.2	1365	6.7	1458	7.2
2765	1112	5.4	1219	6.0	1321	6.5	1417	7.0	1507	7.5
2975	1180	5.8	1281	6.3	1377	6.8	1469	7.3	1556	7.7
3190	1251	6.1	1345	6.6	1437	7.1	1524	7.6	1608	8.0
3400	1321	6.5	1411	7.0	1497	7.4	1581	7.8	1661	8.3
3615	1394	6.9	1478	7.3	1560	7.7	1640	8.1	1717	8.5
3825	1465	7.2	1545	7.7	1623	8.1	1699	8.5	1774	8.8
4040	1539	7.6	1614	8.0	1689	8.4	1762	8.8	1833	9.1
4250	1611	8.0	1683	8.4	1754	8.7	1824	9.1	1892	9.4

CFM	AVAILABLE EXTERNAL STATIC PRESSURE (in. wg)									
	1.2		1.4		1.6		1.8		2.0	
	rpm	vdc	rpm	vdc	rpm	vdc	rpm	vdc	rpm	vdc
2550	1545	7.7	1626	8.1	1702	8.5	1774	8.8	1843	9.2
2765	1591	7.9	1671	8.3	1746	8.7	1818	9.1	1886	9.4
2975	1638	8.1	1716	8.5	1790	8.9	1861	9.3	—	—
3190	1688	8.4	1764	8.8	1837	9.2	1906	9.5	—	—
3400	1738	8.7	1813	9.0	1884	9.4	—	—	—	—
3615	1792	8.9	1864	9.3	—	—	—	—	—	—
3825	1846	9.2	1915	9.6	—	—	—	—	—	—
4040	1902	9.5	—	—	—	—	—	—	—	—
4250	—	—	—	—	—	—	—	—	—	—

Standard/Medium Static 1043-2000 rpm

48QE*M09 — High Static — 8.5 Ton Horizontal Supply (rpm — vdc)

CFM	AVAILABLE EXTERNAL STATIC PRESSURE (in. wg)									
	0.2		0.4		0.6		0.8		1.0	
	rpm	vdc	rpm	vdc	rpm	vdc	rpm	vdc	rpm	vdc
2550	1043	4.7	1158	5.2	1265	5.7	1365	6.1	1458	6.6
2765	1112	5.0	1219	5.5	1321	5.9	1417	6.4	1507	6.8
2975	1180	5.3	1281	5.8	1377	6.2	1469	6.6	1556	7.0
3190	1251	5.6	1345	6.1	1437	6.5	1524	6.9	1608	7.3
3400	1321	5.9	1411	6.4	1497	6.8	1581	7.1	1661	7.5
3615	1394	6.3	1478	6.7	1560	7.0	1640	7.4	1717	7.8
3825	1465	6.6	1545	7.0	1623	7.3	1699	7.7	1774	8.0
4040	1539	6.9	1614	7.3	1689	7.6	1762	8.0	1833	8.3
4250	1611	7.3	1683	7.6	1754	7.9	1824	8.3	1892	8.6

CFM	AVAILABLE EXTERNAL STATIC PRESSURE (in. wg)									
	1.2		1.4		1.6		1.8		2.0	
	rpm	vdc	rpm	vdc	rpm	vdc	rpm	vdc	rpm	vdc
2550	1545	7.0	1626	7.4	1702	7.7	1774	8.0	1843	8.4
2765	1591	7.2	1671	7.6	1746	7.9	1818	8.2	1886	8.6
2975	1638	7.4	1716	7.8	1790	8.1	1861	8.4	1928	8.7
3190	1688	7.6	1764	8.0	1837	8.3	1906	8.6	1973	9.0
3400	1738	7.9	1813	8.2	1884	8.5	1952	8.9	2017	9.2
3615	1792	8.1	1864	8.4	1933	8.8	2000	9.1	2064	9.4
3825	1846	8.4	1915	8.7	1983	9.0	2048	9.3	2111	9.6
4040	1902	8.6	1970	8.9	2035	9.2	2099	9.5	2161	9.8
4250	1959	8.9	2025	9.2	2088	9.5	2150	9.8	—	—

High Static 1043-2200 rpm

48QE*M12 — 10 Ton Horizontal Supply (rpm — bhp)

CFM	AVAILABLE EXTERNAL STATIC PRESSURE (in. wg)									
	0.2		0.4		0.6		0.8		1.0	
	rpm	bhp	rpm	bhp	rpm	bhp	rpm	bhp	rpm	bhp
3000	1122	0.57	1221	0.74	1318	0.93	1410	1.14	1498	1.37
3250	1195	0.68	1288	0.86	1378	1.05	1465	1.26	1549	1.49
3500	1270	0.80	1356	0.98	1441	1.17	1523	1.39	1603	1.62
3750	1345	0.93	1426	1.11	1506	1.31	1584	1.52	1660	1.75
4000	1421	1.07	1498	1.25	1573	1.45	1647	1.66	1719	1.89
4250	1497	1.20	1570	1.39	1641	1.59	1711	1.80	1780	2.02
4500	1574	1.35	1643	1.53	1711	1.73	1777	1.94	1843	2.16
4750	1651	1.50	1717	1.68	1781	1.88	1845	2.09	1908	2.31
5000	1729	1.66	1792	1.85	1853	2.05	1914	2.26	1974	2.48

CFM	AVAILABLE EXTERNAL STATIC PRESSURE (in. wg)									
	1.2		1.4		1.6		1.8		2.0	
	rpm	bhp	rpm	bhp	rpm	bhp	rpm	bhp	rpm	bhp
3000	1581	1.61	1660	1.86	1735	2.12	1806	2.40	1874	2.68
3250	1630	1.73	1707	1.99	1780	2.26	1850	2.53	1917	2.82
3500	1681	1.86	1755	2.12	1827	2.39	1896	2.67	1962	2.96
3750	1734	2.00	1806	2.25	1875	2.52	1943	2.81	2008	3.10
4000	1790	2.13	1859	2.39	1926	2.65	1992	2.94	2055	3.22
4250	1848	2.27	1914	2.52	1979	2.78	2042	3.06	2104	3.34
4500	1908	2.40	1971	2.65	2033	2.90	2095	3.18	2155	3.46
4750	1969	2.54	2030	2.78	2090	3.04	2149	3.30	—	—
5000	2033	2.71	2091	2.94	2149	3.20	—	—	—	—

Standard/Medium Static 1122-2000 rpm, 2.4 max bhp

High Static 1122-2200 rpm, 5.0 max bhp

48QE*M12 — Standard/Medium Static — 10 Ton Horizontal Supply (rpm — vdc)

CFM	AVAILABLE EXTERNAL STATIC PRESSURE (in. wg)									
	0.2		0.4		0.6		0.8		1.0	
	rpm	vdc	rpm	vdc	rpm	vdc	rpm	vdc	rpm	vdc
3000	1122	5.5	1221	6.0	1318	6.5	1410	7.0	1498	7.4
3250	1195	5.9	1288	6.3	1378	6.8	1465	7.2	1549	7.7
3500	1270	6.2	1356	6.7	1441	7.1	1523	7.5	1603	8.0
3750	1345	6.6	1426	7.0	1506	7.5	1584	7.9	1660	8.3
4000	1421	7.0	1498	7.4	1573	7.8	1647	8.2	1719	8.6
4250	1497	7.4	1570	7.8	1641	8.2	1711	8.5	1780	8.9
4500	1574	7.8	1643	8.2	1711	8.5	1777	8.9	1843	9.2
4750	1651	8.2	1717	8.5	1781	8.9	1845	9.2	1908	9.5
5000	1729	8.6	1792	8.9	1853	9.2	1914	9.6	1974	9.9

CFM	AVAILABLE EXTERNAL STATIC PRESSURE (in. wg)									
	1.2		1.4		1.6		1.8		2.0	
	rpm	vdc	rpm	vdc	rpm	vdc	rpm	vdc	rpm	vdc
3000	1581	7.8	1660	8.3	1735	8.6	1806	9.0	—	—
3250	1630	8.1	1707	8.5	1780	8.9	1850	9.2	—	—
3500	1681	8.4	1755	8.7	1827	9.1	—	—	—	—
3750	1734	8.6	1806	9.0	1875	9.4	—	—	—	—
4000	1790	8.9	1859	9.3	—	—	—	—	—	—
4250	1848	9.2	1914	9.6	—	—	—	—	—	—
4500	1908	9.5	—	—	—	—	—	—	—	—
4750	1969	9.8	—	—	—	—	—	—	—	—
5000	—	—	—	—	—	—	—	—	—	—

Standard/Medium Static 1122-2000 rpm

48QE*M12 — High Static — 10 Ton Horizontal Supply (rpm — vdc)

CFM	AVAILABLE EXTERNAL STATIC PRESSURE (in. wg)									
	0.2		0.4		0.6		0.8		1.0	
	rpm	vdc	rpm	vdc	rpm	vdc	rpm	vdc	rpm	vdc
3000	1122	5.0	1221	5.5	1318	5.9	1410	6.4	1498	6.8
3250	1195	5.4	1288	5.8	1378	6.2	1465	6.6	1549	7.0
3500	1270	5.7	1356	6.1	1441	6.5	1523	6.9	1603	7.2
3750	1345	6.1	1426	6.4	1506	6.8	1584	7.2	1660	7.5
4000	1421	6.4	1498	6.8	1573	7.1	1647	7.4	1719	7.8
4250	1497	6.8	1570	7.1	1641	7.4	1711	7.7	1780	8.1
4500	1574	7.1	1643	7.4	1711	7.7	1777	8.0	1843	8.4
4750	1651	7.5	1717	7.8	1781	8.1	1845	8.4	1908	8.7
5000	1729	7.8	1792	8.1	1853	8.4	1914	8.7	1974	9.0

CFM	AVAILABLE EXTERNAL STATIC PRESSURE (in. wg)									
	1.2		1.4		1.6		1.8		2.0	
	rpm	vdc	rpm	vdc	rpm	vdc	rpm	vdc	rpm	vdc
3000	1581	7.1	1660	7.5	1735	7.9	1806	8.2	1874	8.5
3250	1630	7.4	1707	7.7	1780	8.1	1850	8.4	1917	8.7
3500	1681	7.6	1755	7.9	1827	8.3	1896	8.6	1962	8.9
3750	1734	7.8	1806	8.2	1875	8.5	1943	8.8	2008	9.1
4000	1790	8.1	1859	8.4	1926	8.7	1992	9.0	2055	9.3
4250	1848	8.4	1914	8.7	1979	9.0	2042	9.3	2104	9.6
4500	1908	8.7	1971	8.9	2033	9.2	2095	9.5	2155	9.8
4750	1969	8.9	2030	9.2	2090	9.5	2149	9.8	—	—
5000	2033	9.2	2091	9.5	2149	9.8	—	—	—	—

High Static 1122-2200 rpm

Legend and Notes

Applicable for Electrical Data Tables on pages 64-66

LEGEND

BRKR — Circuit Breaker
CO — Convenience Outlet
FLA — Full Load Amps
IFM — Indoor Fan Motor
LRA — Locked Rotor Amps
MCA — Minimum Circuit Amps
PE — Power Exhaust
Pwrd fr/unit — Powered From Unit
PWRD CO — Powered Convenience Outlet
RLA — Rated Load Amps
UNPWR CO — Unpowered Convenience Outlet

NOTES:

1. In compliance with NEC requirements for multi-motor and combination load equipment (refer to NEC Articles 430 and 440), the overcurrent protective device for the unit shall be fuse or HACR breaker. Canadian units may be fuse or circuit breaker.
2. For 208/230 v units, where one value is show it is the same for either 208 or 230 volts.
3. **Unbalanced 3-Phase Supply Voltage**: Never operate a motor where a phase imbalance in supply voltage is greater than 2%. Use the following formula to determine the percentage of voltage imbalance.

$$\text{\% Voltage Imbalance} = 100 \times \frac{\text{max voltage deviation from average voltage}}{\text{average voltage}}$$

Example: Supply voltage is 230-3-60

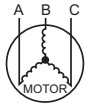

AB = 224-v
BC = 231-v
AC = 226-v

$$\text{Average Voltage} = \frac{(224 + 231 + 226)}{3} = \frac{681}{3} = 227$$

Determine maximum deviation from average voltage.
(AB) 227-224 = 3-v
(BC) 231-227 = 4-v
(AC) 227-226 = 1-v
Maximum deviation is 4-v.
Determine percent of voltage imbalance.

$$\text{\% Voltage Imbalance} = 100x \frac{4}{227} = 1.76\%$$

This amount of phase imbalance is satisfactory as it is below the maximum allowable 2%.

IMPORTANT: If the supply voltage phase imbalance is more than 2%, contact your local electric utility company immediately.

48QE**07-12 Cooling Electrical Data

UNIT SIZE	V-Ph-Hz	UNIT VOLTAGE Range		STD SCCR kA	HIGH SCCR kA[a]	COMPRESSOR 1		COMPRESSOR 2		OFM (EA)		IFM			COMBUSTION FAN MOTOR	POWER EXHAUST	
		Min	Max			RLA	LRA	RLA	LRA	WATTS	FLA	Type	Efficiency at Full Load	FLA	FLA	Kit Qty	FLA (ea kit)
48QE*M07	208-3-60	187	253	5	10	12.8	103	8.3	68	325	1.5	STD/MED	90%	6.4	0.48	1	3.8
												HIGH	90%	7.5			
	230-3-60	187	253	5	10	12.8	103	8.3	68	325	1.5	STD/MED	90%	6.4	0.48	1	3.8
												HIGH	90%	7.5			
	460-3-60	414	506	5	10	5.8	50	5.1	38	325	0.8	STD/MED	90%	3.0	0.25	1	1.8
												HIGH	90%	3.5			
	575-3-60	518	633	5	—	5.1	41	3.5	24	325	0.6	STD/MED	90%	2.5	0.24	1	3.8
												HIGH	90%	3.0			
48QE*M08	208-3-60	187	253	5	10	16.0	156	12.8	98	325	1.5	STD/MED	90%	6.4	0.48	1	3.8
												HIGH	90%	7.5			
	230-3-60	187	253	5	10	16.0	156	12.8	98	325	1.5	STD/MED	90%	6.4	0.48	1	3.8
												HIGH	90%	7.5			
	460-3-60	414	506	5	10	7.7	69	5.1	44	325	0.8	STD/MED	90%	3.0	0.25	1	1.8
												HIGH	90%	3.5			
	575-3-60	518	633	5	—	6.4	48	4.5	27	325	0.6	STD/MED	90%	2.5	0.24	1	3.8
												HIGH	90%	3.0			
48QE*M09	208-3-60	187	253	5	10	18.6	16	12.8	103	1070	7.4	STD/MED	90%	6.4	0.48	1	3.8
												HIGH	90%	7.5			
	230-3-60	187	253	5	10	18.6	16	12.8	103	1070	7.4	STD/MED	90%	6.4	0.48	1	3.8
												HIGH	90%	7.5			
	460-3-60	414	506	5	10	8.3	58	5.8	50	1070	7.4	STD/MED	90%	3.0	0.25	1	1.8
												HIGH	90%	3.5			
	575-3-60	518	633	5	—	7.7	48	5.1	41	1070	7.4	STD/MED	90%	2.5	0.24	1	3.8
												HIGH	90%	3.0			
48QE*M12	208-3-60	187	253	5	10	21.1	157	13.4	120	280	1.5	STD/MED	90%	6.4	0.48	1	3.8
												HIGH	90%	12.6			
	230-3-60	187	253	5	10	21.1	157	13.4	120	280	1.5	STD/MED	90%	6.4	0.48	1	3.8
												HIGH	90%	12.6			
	460-3-60	414	506	5	10	9.1	75	6.4	50	280	0.8	STD/MED	90%	3.0	0.25	1	1.8
												HIGH	90%	5.6			
	575-3-60	518	633	5	—	7.7	48	5.1	41	280	0.6	STD/MED	90%	2.5	0.24	1	3.8
												HIGH	90%	4.6			

NOTE(S):

a. High SCCR (Short Circuit Current Rating) is not available on the following: units with phase loss monitor, non-fused disconnect, Humidi-MiZer® system, HACR circuit breaker, powered convenience outlet, and 575V models.

48QE**07-12 MCA MOCP Electrical Data

48QE UNIT	NOM. V-Ph-Hz	IFM TYPE	STD SCCR kA	HIGH SCCR kA[a]	NO CONVENIENCE OUTLET OR UNPOWERED CONVENIENCE OUTLET							
					No Power Exhaust				With Power Exhaust (powered from unit)			
					MCA	Fuse or HACR Breaker	Disconnect Size		MCA	Fuse or HACR Breaker	Disconnect Size	
							FLA	LRA			FLA	LRA
48QE*M07	208/230-3-60	STD/MED	5	10	35	45	36	186	38	50	40	190
		HIGH			36	45	37	188	40	50	41	192
	460-3-60	STD/MED	5	10	18	20	18	95	19	25	20	97
		HIGH			18	20	19	98	20	25	21	100
	575-3-60	STD/MED	5	—	14	20	14	72	18	20	19	76
		HIGH			15	20	15	73	19	20	19	77
48QE*M08	208/230-3-60	STD/MED	5	10	43	50	44	269	47	60	49	273
		HIGH			44	50	46	271	48	60	50	275
	460-3-60	STD/MED	5	10	20	25	20	120	22	25	22	122
		HIGH			21	25	21	123	22	25	23	125
	575-3-60	STD/MED	5	—	17	20	17	82	21	25	21	86
		HIGH			17	20	18	83	21	25	22	87
48QE*M09	208/230-3-60	STD/MED	5	10	51	60	53	137	55	60	57	141
		HIGH			52	60	54	139	56	60	58	143
	460-3-60	STD/MED	5	10	27	30	28	120	29	35	31	122
		HIGH			28	30	29	123	30	35	31	125
	575-3-60	STD/MED	5	—	25	30	26	101	29	35	31	105
		HIGH			26	30	27	102	30	35	31	106
48QE*M12	208/230-3-60	STD/MED	5	10	52	60	53	294	55	70	57	298
		HIGH			58	70	60	303	62	80	64	307
	460-3-60	STD/MED	5	10	24	30	24	133	26	30	26	135
		HIGH			26	30	27	137	28	35	29	139
	575-3-60	STD/MED	5	—	20	25	20	97	24	30	24	101
		HIGH			22	25	22	99	26	30	27	103

NOTE(S):

a. High SCCR (Short Circuit Current Rating) is not available on the following: units with phase loss monitor, non-fused disconnect, Humidi-MiZer® system, HACR circuit breaker, and 575V models.

48QE**07-12 MCA MOCP Electrical Data (cont)

48QE UNIT SIZE	NOM. V-Ph-Hz	IFM TYPE	STD SCCR kA	WITH POWERED CONVENIENCE OUTLET							
				No Power Exhaust				With Power Exhaust (powered from unit)			
				MCA	Fuse or HACR Breaker	Disconnect Size		MCA	Fuse or HACR Breaker	Disconnect Size	
						FLA	LRA			FLA	LRA
48QE*M07	208/230-3-60	STD/MED	5	39	50	41	191	43	50	46	195
		HIGH		41	50	42	193	44	50	47	197
	460-3-60	STD/MED	5	20	25	21	97	22	25	23	99
		HIGH		20	25	21	100	22	25	23	102
	575-3-60	STD/MED	5	16	20	16	74	20	25	21	78
		HIGH		16	20	17	75	20	25	21	79
48QE*M08	208/230-3-60	STD/MED	5	48	60	50	274	52	60	54	278
		HIGH		49	60	51	276	53	60	56	280
	460-3-60	STD/MED	5	22	25	23	122	24	30	25	124
		HIGH		23	25	23	125	25	30	25	127
	575-3-60	STD/MED	5	19	20	19	84	22	25	23	88
		HIGH		19	25	20	85	23	25	24	89
48QE*M09	208/230-3-60	STD/MED	5	56	60	58	142	59	70	62	146
		HIGH		57	70	59	144	60	70	64	148
	460-3-60	STD/MED	5	29	35	31	122	31	35	33	124
		HIGH		30	35	32	125	32	35	34	127
	575-3-60	STD/MED	5	27	30	28	103	31	35	33	107
		HIGH		28	30	29	104	31	35	33	108
48QE*M12	208/230-3-60	STD/MED	5	56	70	58	299	60	80	63	303
		HIGH		63	80	65	308	66	80	70	312
	460-3-60	STD/MED	5	26	30	27	135	28	30	29	137
		HIGH		29	35	30	139	30	35	32	141
	575-3-60	STD/MED	5	21	25	22	99	25	30	26	103
		HIGH		24	30	24	101	27	30	29	105

Typical Control Wiring Diagram, SystemVu Controller — 48QE 07-08 Units

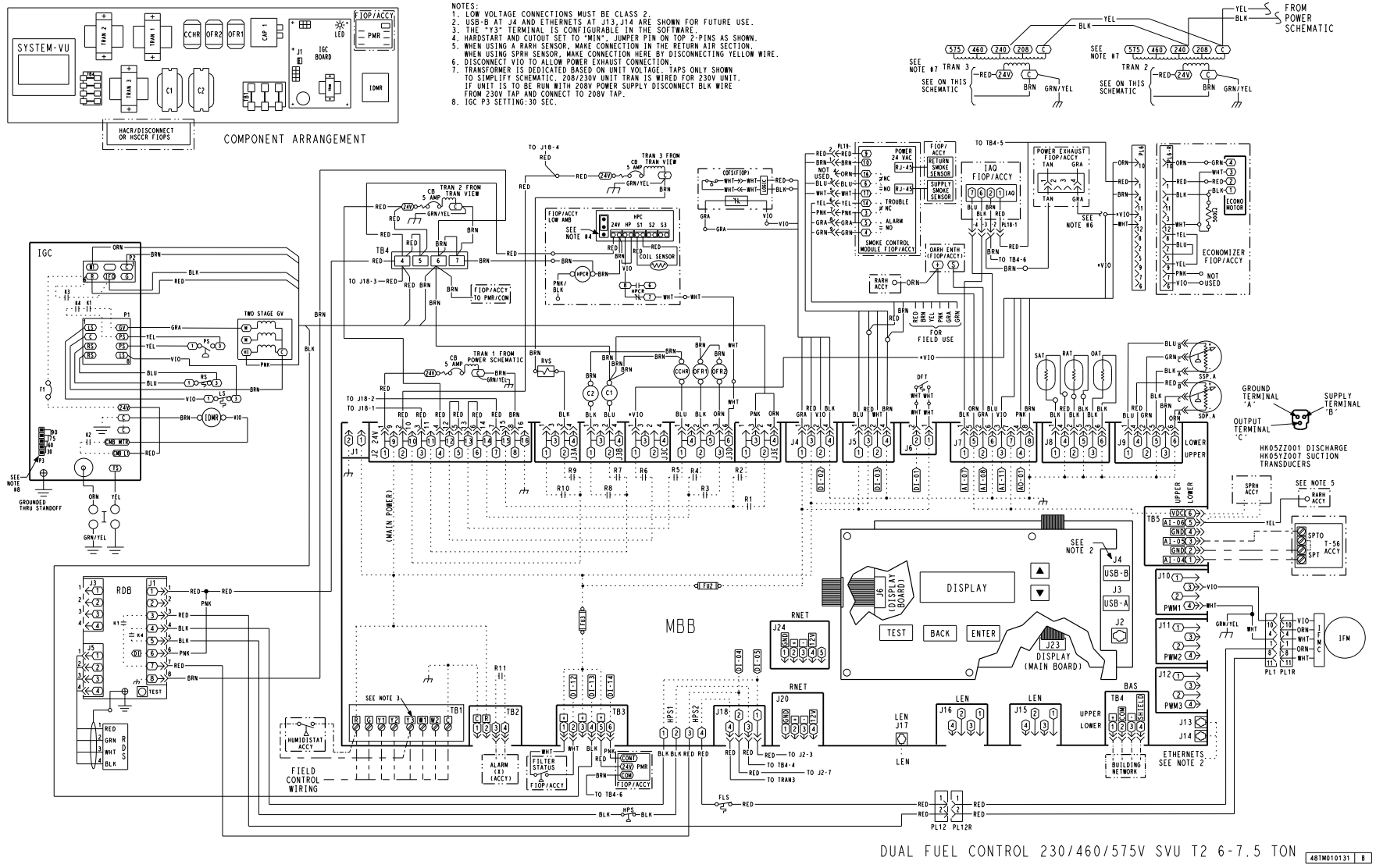

Typical Power Wiring Diagram, SystemVu Controller, with or without the Humidi-MiZer System Option — 48QE 07-08 230/460-3-60 Units Shown

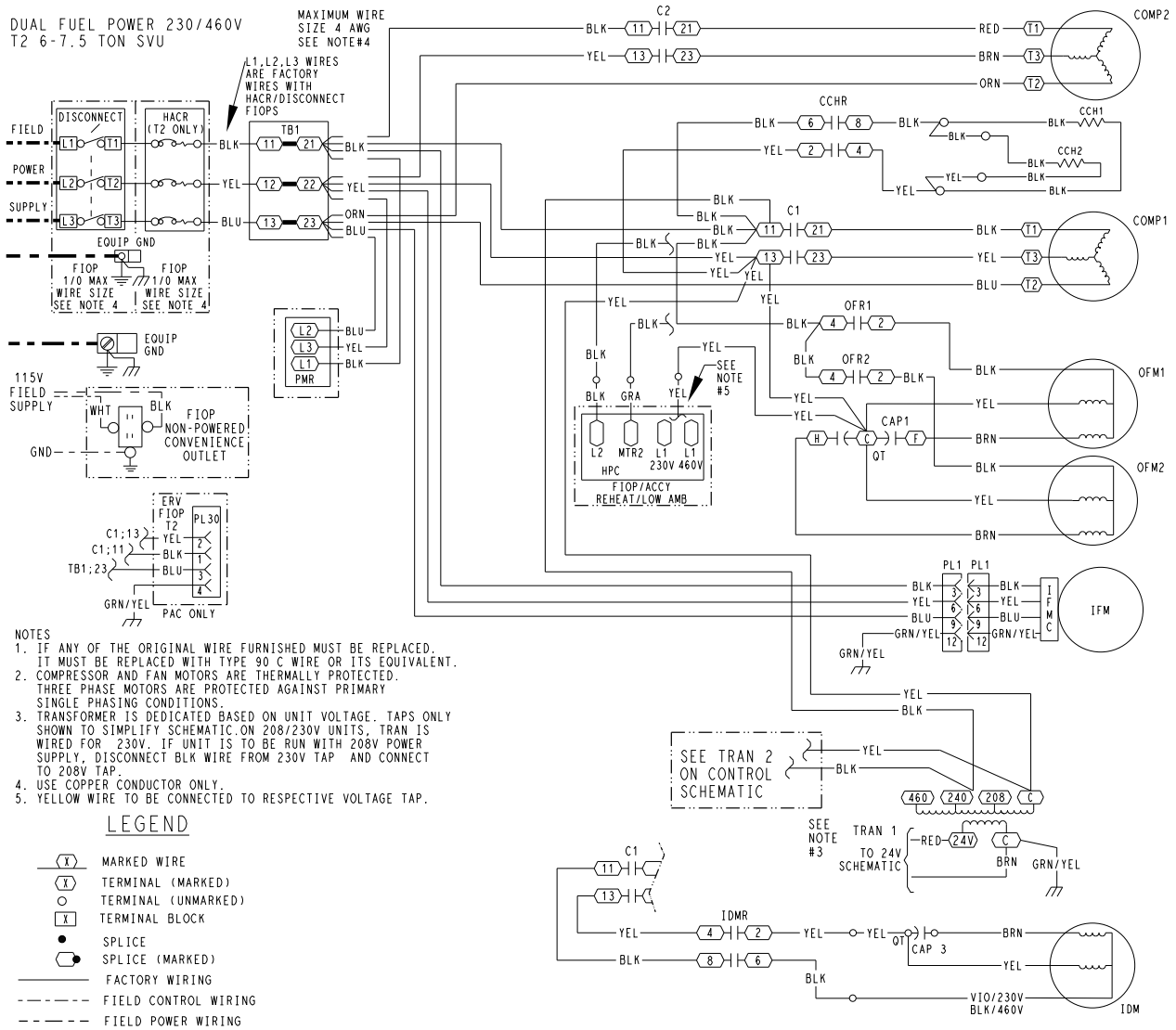

NOTES
1. IF ANY OF THE ORIGINAL WIRE FURNISHED MUST BE REPLACED. IT MUST BE REPLACED WITH TYPE 90 C WIRE OR ITS EQUIVALENT.
2. COMPRESSOR AND FAN MOTORS ARE THERMALLY PROTECTED. THREE PHASE MOTORS ARE PROTECTED AGAINST PRIMARY SINGLE PHASING CONDITIONS.
3. TRANSFORMER IS DEDICATED BASED ON UNIT VOLTAGE. TAPS ONLY SHOWN TO SIMPLIFY SCHEMATIC.ON 208/230V UNITS, TRAN IS WIRED FOR 230V. IF UNIT IS TO BE RUN WITH 208V POWER SUPPLY, DISCONNECT BLK WIRE FROM 230V TAP AND CONNECT TO 208V TAP.
4. USE COPPER CONDUCTOR ONLY.
5. YELLOW WIRE TO BE CONNECTED TO RESPECTIVE VOLTAGE TAP.

LEGEND

- MARKED WIRE
- TERMINAL (MARKED)
- TERMINAL (UNMARKED)
- TERMINAL BLOCK
- SPLICE
- SPLICE (MARKED)
- FACTORY WIRING
- FIELD CONTROL WIRING
- FIELD POWER WIRING
- CIRCUIT BOARD TRACE
- ACCESSORY OR OPTIONAL WIRING

ACCY	ACCESSORY
AMB	AMBIENT
C	CONTACTOR,COMPRESSOR
CAP	CAPACITOR
CB	CIRCUIT BREAKER
CCH	CRANKCASE HEATER
CCHR	CRANKCASE HEATER RELAY
COFS	CONDENSATE OVERFLOW SWT
COMP	COMPRESSOR MOTOR
CS2V	COOLING STAGE-2 VALVE
DDC	DIRECT DIGITAL CONTROL
ERV	ENERGY RECOVERY VENTILATOR
FIOP	FACTORY INSTALLED OPTION
FLS	FAN LIMIT SWITCH
FPT	FREEZE PROTECTION THERMOSTAT
FSD	FIRE SHUT DOWN
FU	FUSE
GND	GROUND
HPC	HEAD PRESSURE CONTROL
HPS	HIGH PRESSURE SWITCH
IAQ	INDOOR AIR QUALITY SENSORS
IDM	INDUCED DRAFT MOTOR
IFCB	INDOOR FAN CIRCUIT BREAKER
IFM	INDOOR FAN MOTOR
IFMC	INDOOR FAN MOTOR CONTROLLER
IGC	INTEGRATED GAS CONTROL
LA	LOW AMBIENT LOCKOUT
LDR	COMPRESSOR LOADER (INTERNAL)
LDV	LIQUID DIVERTER VALVE
LPS	LOW PRESSURE SWITCH
LSM	LIMIT SWITCH (MANUAL RESET)
LTLO	LOW TEMPERATURE LOCKOUT
MOV	VOLTAGE RESTRICTOR
MTR	MOTOR
MTS	MIXED AIR TEMPERATURE SWITCH
OAQ	OUTDOOR AIR QUALITY
OARH	OUTSIDE AIR RELATIVE HUMIDITY
OAT	OUTDOOR AIR TEMP. SEN
OFM	OUTDOOR FAN MOTOR
OFR	OUTDOOR FAN RELAY
OL	OVERLOAD
PL	PLUG ASSEMBLY
POT	POTENTIOMETER
PMR	PHASE MONITOR RELAY
QT	QUADRUPLE TERMINAL
RARH	RETURN AIR RELATIVE HUMIDITY
RAT	RETURN AIR TEMP. SENSOR
RDB	REFRIGERANT DISSIPATION BOARD
RDS	REFRIGERANT DISSIPATION SENSOR
RDV	REHEAT DISCHARGE VALVE
RVS	REVERSING VALVE SOLENOID
SAT	SUPPLY AIR TEMP. SENSOR
SEN	SENSOR
SPRH	SPACE RELATIVE HUMIDITY
SPT	SPACE TEMPERATURE SENSOR
SPTO	SPACE TEMPERATURE OFFSET
STD	STANDARD
TB	TERMINAL BLOCK
TRAN	TRANSFORMER
UCB	UNIT CONTROL BOARD

48TM010135 | B

Typical Control Wiring Diagram, SystemVu Controller with Humidi-MiZer System — 48QE 07-08 Units

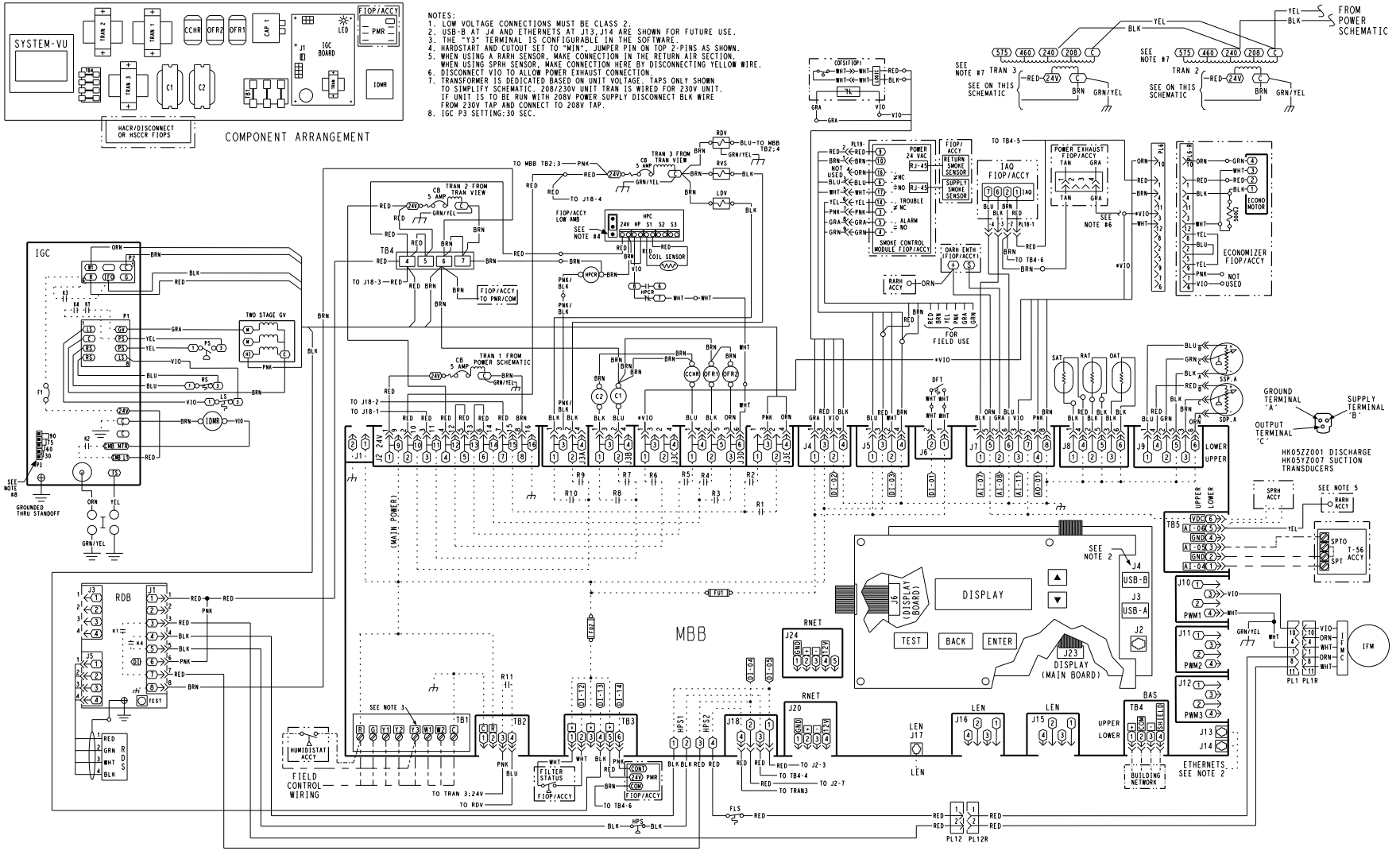

Typical Control Wiring Diagram, SystemVu Controller — 48QE 09 Units

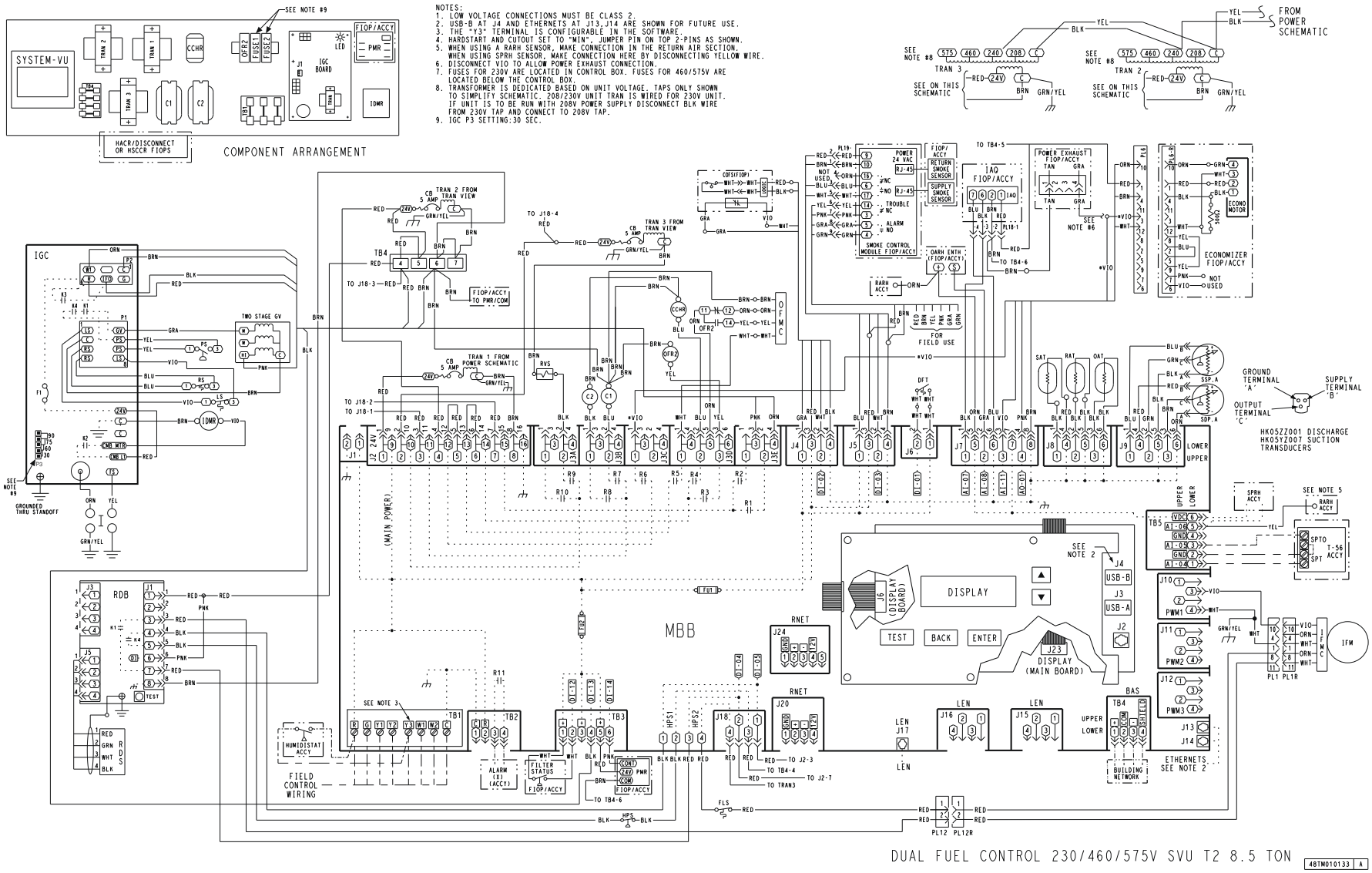

Typical Power Wiring Diagram, SystemVu Controller, with or without the Humidi-MiZer System Option — 48QE 09 460/575-3-60 Units Shown

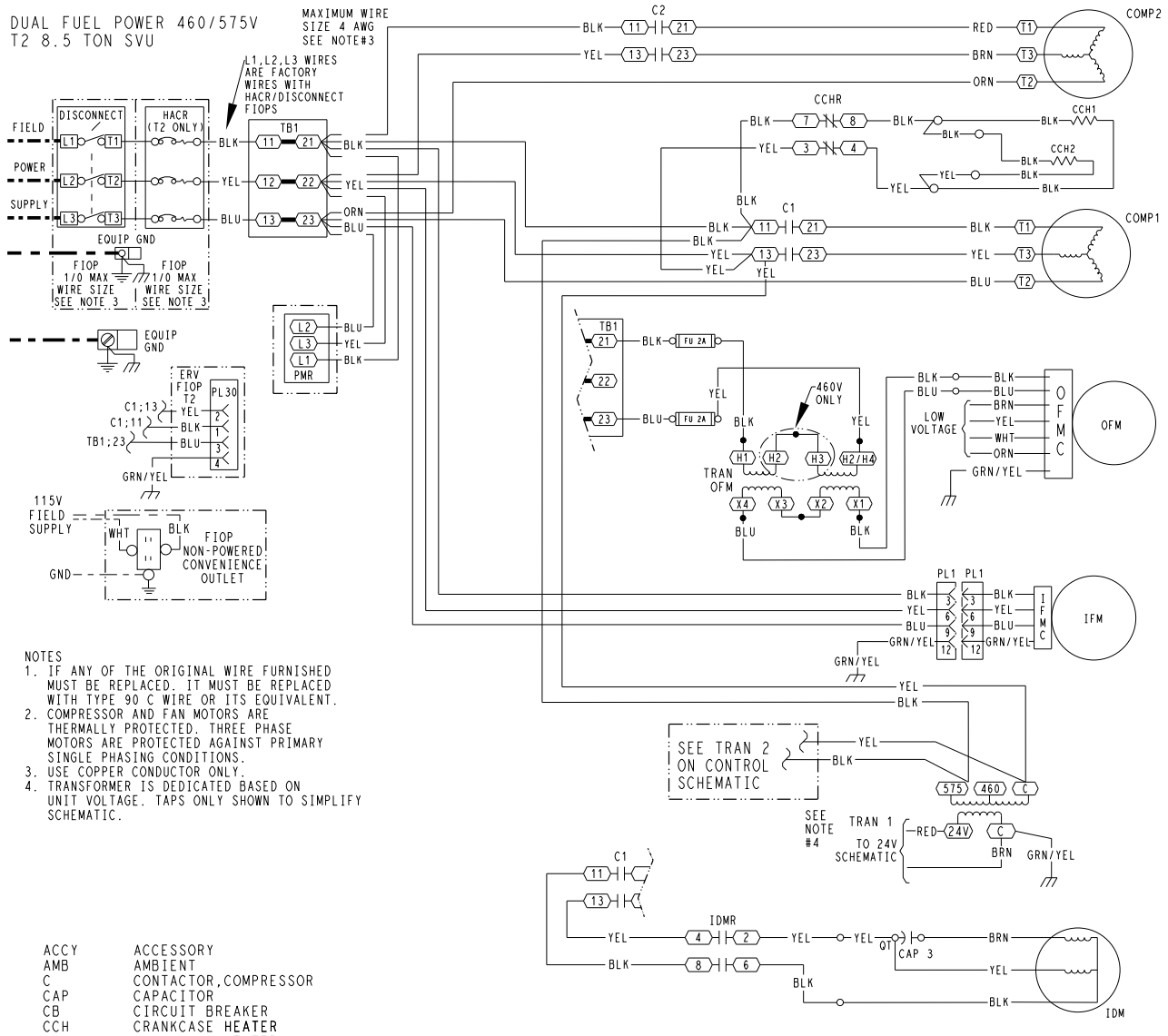

NOTES
1. IF ANY OF THE ORIGINAL WIRE FURNISHED MUST BE REPLACED. IT MUST BE REPLACED WITH TYPE 90 C WIRE OR ITS EQUIVALENT.
2. COMPRESSOR AND FAN MOTORS ARE THERMALLY PROTECTED. THREE PHASE MOTORS ARE PROTECTED AGAINST PRIMARY SINGLE PHASING CONDITIONS.
3. USE COPPER CONDUCTOR ONLY.
4. TRANSFORMER IS DEDICATED BASED ON UNIT VOLTAGE. TAPS ONLY SHOWN TO SIMPLIFY SCHEMATIC.

ACCY	ACCESSORY
AMB	AMBIENT
C	CONTACTOR,COMPRESSOR
CAP	CAPACITOR
CB	CIRCUIT BREAKER
CCH	CRANKCASE HEATER
CCHR	CRANKCASE HEATER RELAY
COFS	CONDENSATE OVERFLOW SWT
COMP	COMPRESSOR MOTOR
CS2V	COOLING STAGE-2 VALVE
DDC	DIRECT DIGITAL CONTROL
ERV	ENERGY RECOVERY VENTILATOR
FIOP	FACTORY INSTALLED OPTION
FLS	FAN LIMIT SWITCH
FPT	FREEZE PROTECTION THERMOSTAT
FSD	FIRE SHUT DOWN
FU	FUSE
GND	GROUND
HPC	HEAD PRESSURE CONTROL
HPS	HIGH PRESSURE SWITCH
IAQ	INDOOR AIR QUALITY SENSORS
IDM	INDUCED DRAFT MOTOR
IDMR	INDUCED DRAFT MOTOR RELAY
IFCB	INDOOR FAN CIRCUIT BREAKER
IFM	INDOOR FAN MOTOR
IFMC	INDOOR FAN MOTOR CONTROLLER
IGC	INTEGRATED GAS CONTROL
LA	LOW AMBIENT LOCKOUT
LDR	COMPRESSOR LOADER (INTERNAL)
LDV	LIQUID DIVERTER VALVE
LPS	LOW PRESSURE SWITCH
LSM	LIMIT SWITCH (MANUAL RESET)
LTLO	LOW TEMPERATURE LOCKOUT
MOV	VOLTAGE RESTRICTOR
MTR	MOTOR
MTS	MIXED AIR TEMPERATURE SWITCH
OAQ	OUTDOOR AIR QUALITY
OARH	OUTSIDE AIR RELATIVE HUMIDITY
OAT	OUTDOOR AIR TEMP. SEN
OFM	OUTDOOR FAN MOTOR
OL	OVERLOAD
PL	PLUG ASSEMBLY
POT	POTENTIOMETER
PMR	PHASE MONITOR RELAY
QT	QUADRUPLE TERMINAL
RARH	RETURN AIR RELATIVE HUMIDITY
RAT	RETURN AIR TEMP. SENSOR
RDB	REFRIGERANT DISSIPATION BOARD
RDS	REFRIGERANT DISSIPATION SENSOR
RDV	REHEAT DISCHARGE VALVE
RVS	REVERSING VALVE SOLENOID
SAT	SUPPLY AIR TEMP. SENSOR
SEN	SENSOR
SPRH	SPACE RELATIVE HUMIDITY
SPT	SPACE TEMPERATURE SENSOR
SPTO	SPACE TEMPERATURE OFFSET
STD	STANDARD
TB	TERMINAL BLOCK
TRAN	TRANSFORMER
UCB	UNIT CONTROL BOARD

LEGEND

(X)	MARKED WIRE
(X)	TERMINAL (MARKED)
○	TERMINAL (UNMARKED)
[X]	TERMINAL BLOCK
●	SPLICE
(●)	SPLICE (MARKED)
———	FACTORY WIRING
- - - -	FIELD CONTROL WIRING
— — —	FIELD POWER WIRING
.....	CIRCUIT BOARD TRACE
—··—··—	ACCESSORY OR OPTIONAL WIRING

48TM010137 | B

Typical Control Wiring Diagram, SystemVu Controller with Humidi-MiZer System — 48QE 09 Units

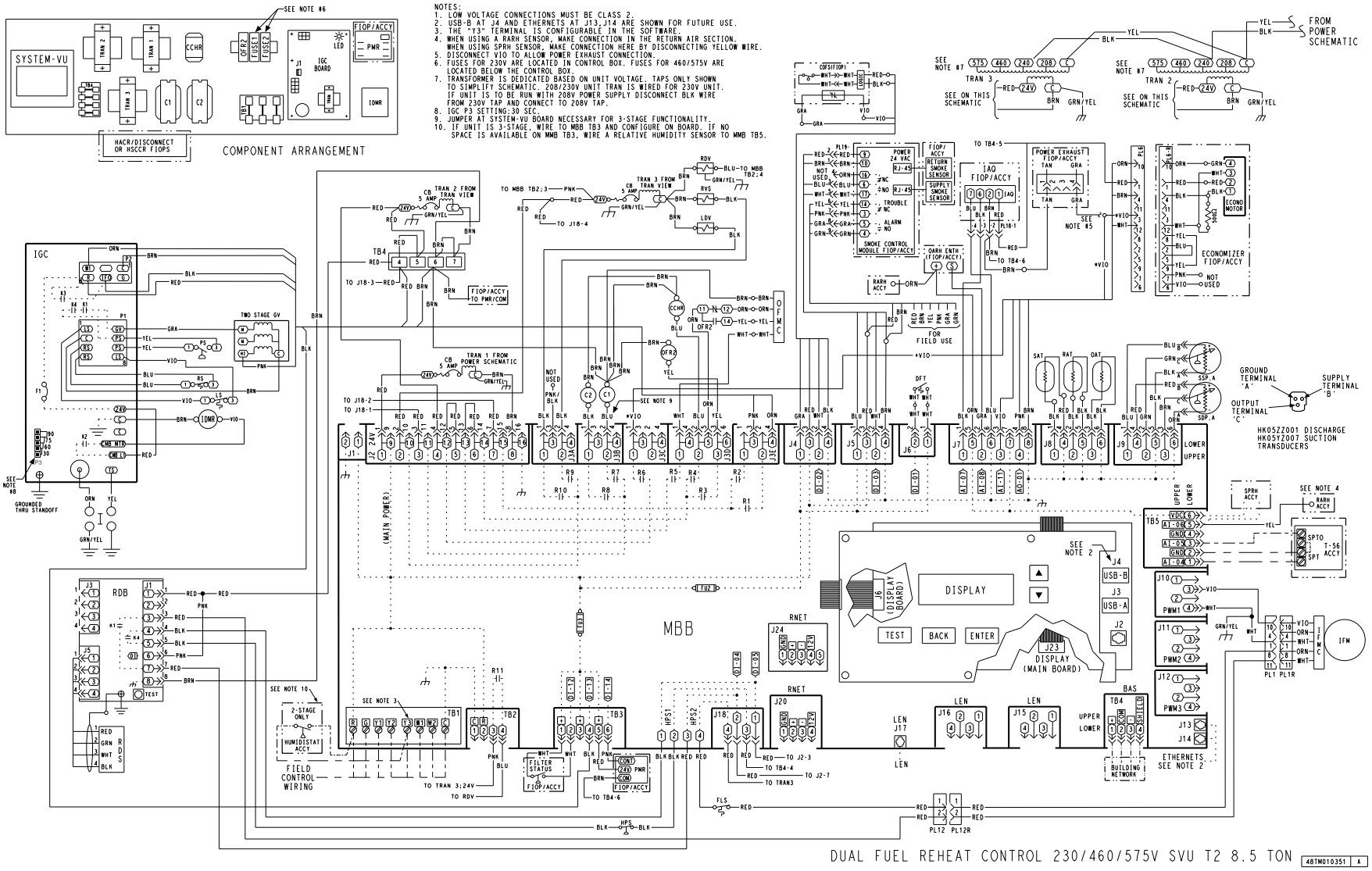

Typical Control Wiring Diagram, SystemVu Controller — 48QE 12 Units

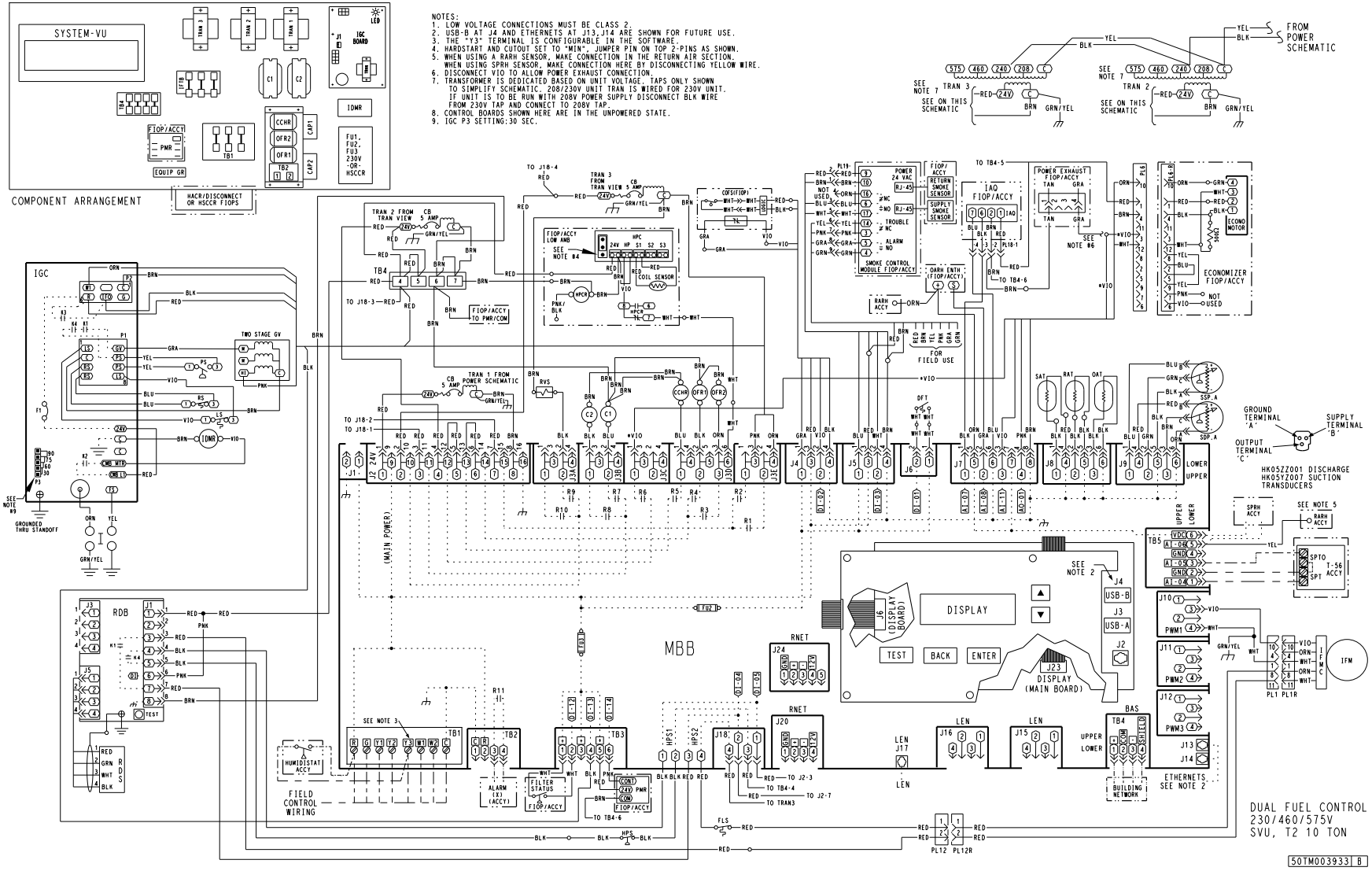

Typical Power Wiring Diagram, SystemVu Controller, with or without the Humidi-MiZer System Option — 48QE 12 208/230, 460-3-60 Units Shown

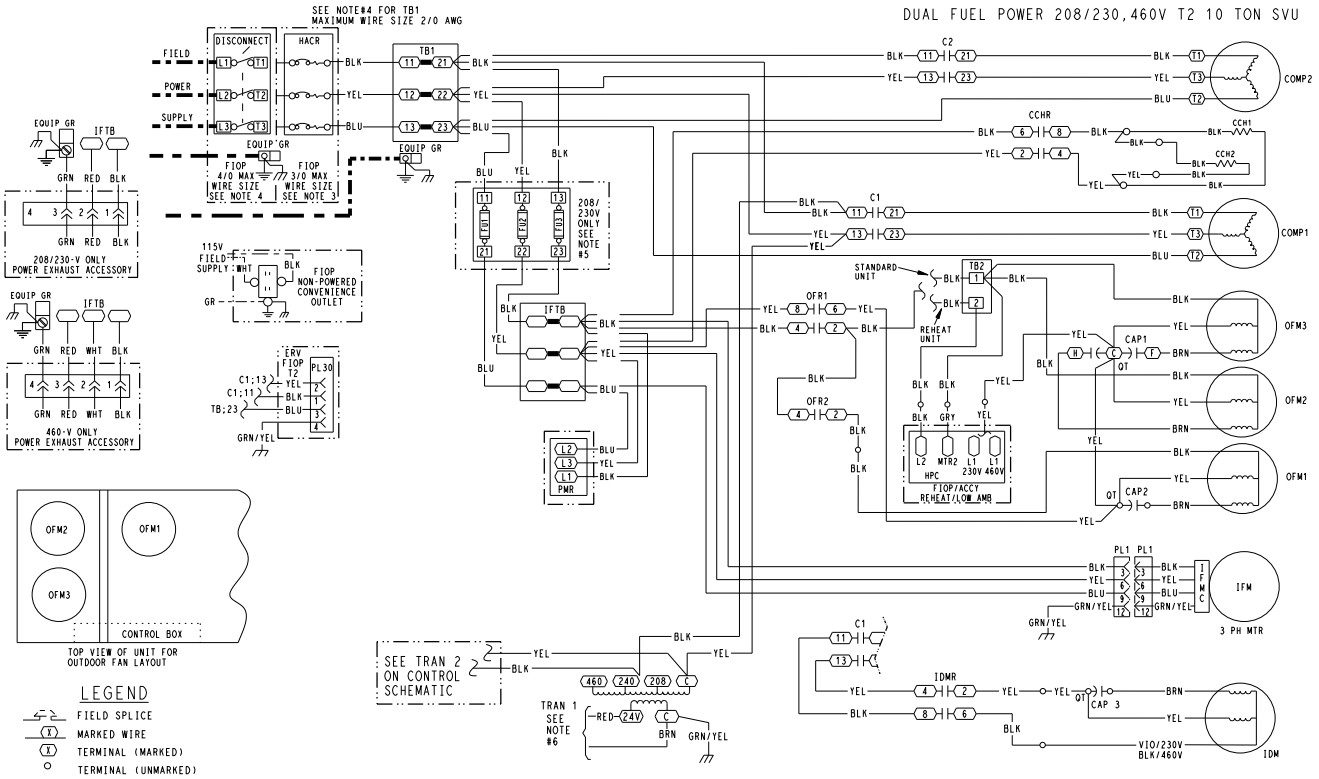

LEGEND

- FIELD SPLICE
- MARKED WIRE
- TERMINAL (MARKED)
- TERMINAL (UNMARKED)
- SPLICE
- TERMINAL BLOCK
- FACTORY WIRING
- FIELD CONTROL WIRING
- FIELD POWER WIRING
- CIRCUIT BOARD TRACE
- ACCESSORY OR FIOP
- TO INDICATE COMMON POTENTIAL ONLY: NOT TO REPRESENT WIRING

NOTES:
1. IF ANY OF THE ORIGINAL WIRE FURNISHED MUST BE REPLACED, IT MUST BE REPLACED WITH TYPE 90 C WIRE OR ITS EQUIVALENT.
2. COMPRESSOR AND FAN MOTORS ARE THERMALLY PROTECTED. THREE PHASE MOTORS ARE PROTECTED AGAINST PRIMARY SINGLE PHASING CONDITIONS.
3. USE COPPER, COPPER CLAD ALUMINUM OR ALUMINUM CONDUCTORS.
4. USE COPPER CONDUCTORS ONLY.
5. FU1, FU2, AND FU3, REPLACE WITH 250V 60A BUSSMAN FRNR 60.
6. TRANSFORMER IS DEDICATED BASED ON UNIT VOLTAGE. TAPS ONLY SHOWN TO SIMPLIFY SCHEMATIC. 208/230V UNIT TRAN IS WIRED FOR 230V UNIT. IF UNIT IS TO BE RUN WITH 208V POWER SUPPLY DISCONNECT BLK WIRE FROM 230V TAP AND CONNECT TO 200V TAP.

ACCY	ACCESSORY
AMB	AMBIENT
C	CONTACTOR,COMPRESSOR
CAP	CAPACITOR
CB	CIRCUIT BREAKER
CCH	CRANKCASE HEATER
CCHR	CRANKCASE HEATER RELAY
CMB	COMBUSTION
COFS	CONDENSATE OVERFLOW SWT
COMP	COMPRESSOR MOTOR
DDC	DIRECT DIGITAL CONTROL
EHR	ELECTRIC HEATER RELAY
ERV	ENERGY RECOVERY VENTILATOR
FIOP	FACTORY INSTALLED OPTION
FLS	FAN LIMIT SWITCH
FPT	FREEZE PROTECTION THERMOSTAT
FSD	FIRE SHUT DOWN
FS	FLAME SENSOR
FU	FUSE
GND	GROUND
GVR	GAS VALVE RELAY
HPC	HEAD PRESSURE CONTROL
HPS	HIGH PRESSURE SWITCH
HS	HALL EFFECT SENSOR
I	IGNITOR
IAQ	INDOOR AIR QUALITY SENSORS
IDM	INDUCED DRAFT MOTOR
IDMR	INDUCED DRAFT MOTOR RELAY
IFCB	INDOOR FAN CIRCUIT BREAKER
IFM	INDOOR FAN MOTOR
IFMC	INDOOR FAN CONTROLLER
IGC	INTEGRATED GAS CONTROL
IFTB	INDOOR FAN TERMINAL BLOCK
JMP	JUMPER
LA	LOW AMBIENT
LAR	LOW AMBIENT RELAY
LDV	LIQUID DIVERTER VALVE
LPS	LOW PRESSURE SWITCH
LSM	LIMIT SWITCH (MANUAL RESET)
LS	LIMIT SWITCH
LTLO	LOW TEMPERATURE LOCKOUT
MGV	MAIN GAS VALVE
MOV	VOLTAGE RESTRICTOR
MTR	MOTOR
MTS	MIXED AIR TEMPERATURE SWITCH
OAQ	OUTDOOR AIR QUALITY
OARH	OUTSIDE AIR RELATIVE HUMIDITY
OAT	OUTDOOR AIR TEMP. SENSOR
OFM	OUTDOOR FAN MOTOR
OFR	OUTDOOR FAN RELAY
OL	OVERLOAD
PL	PLUG ASSEMBLY
POT	POTENTIOMETER
PMR	PHASE MONITOR RELAY
QT	QUADRUPLE TERMINAL
RARH	RETURN AIR RELATIVE HUMIDITY
RAT	RETURN AIR TEMP. SENSOR
RDB	REFRIGERANT DISSIPATION BOARD
RDS	REFRIGERANT DISSIPATION SENSOR
RDV	REHEAT DISCHARGE VALVE
RS	ROLLOUT SWITCH
RVS	REVERSING VALVE SOLENOID
RVSR	REVERSING VALVE SOLENOID RELAY
SAT	SUPPLY AIR TEMP. SENSOR
SEN	SENSOR
SPRH	SPACE RELATIVE HUMIDITY
SPT	SPACE TEMPERATURE SENSOR
SPTO	SPACE TEMPERATURE OFFSET
STD	STANDARD
TB	TERMINAL BLOCK
TBR	TEMPERATURE BYPASS RELAY
TDR	TIME DELAY RELAY(WINTER START)
TRAN	TRANSFORMER
UCB	UNIT CONTROL BOARD

50TM003935 B

Typical Control Wiring Diagram, SystemVu Controller with Humidi-MiZer System — 48QE 12 Units

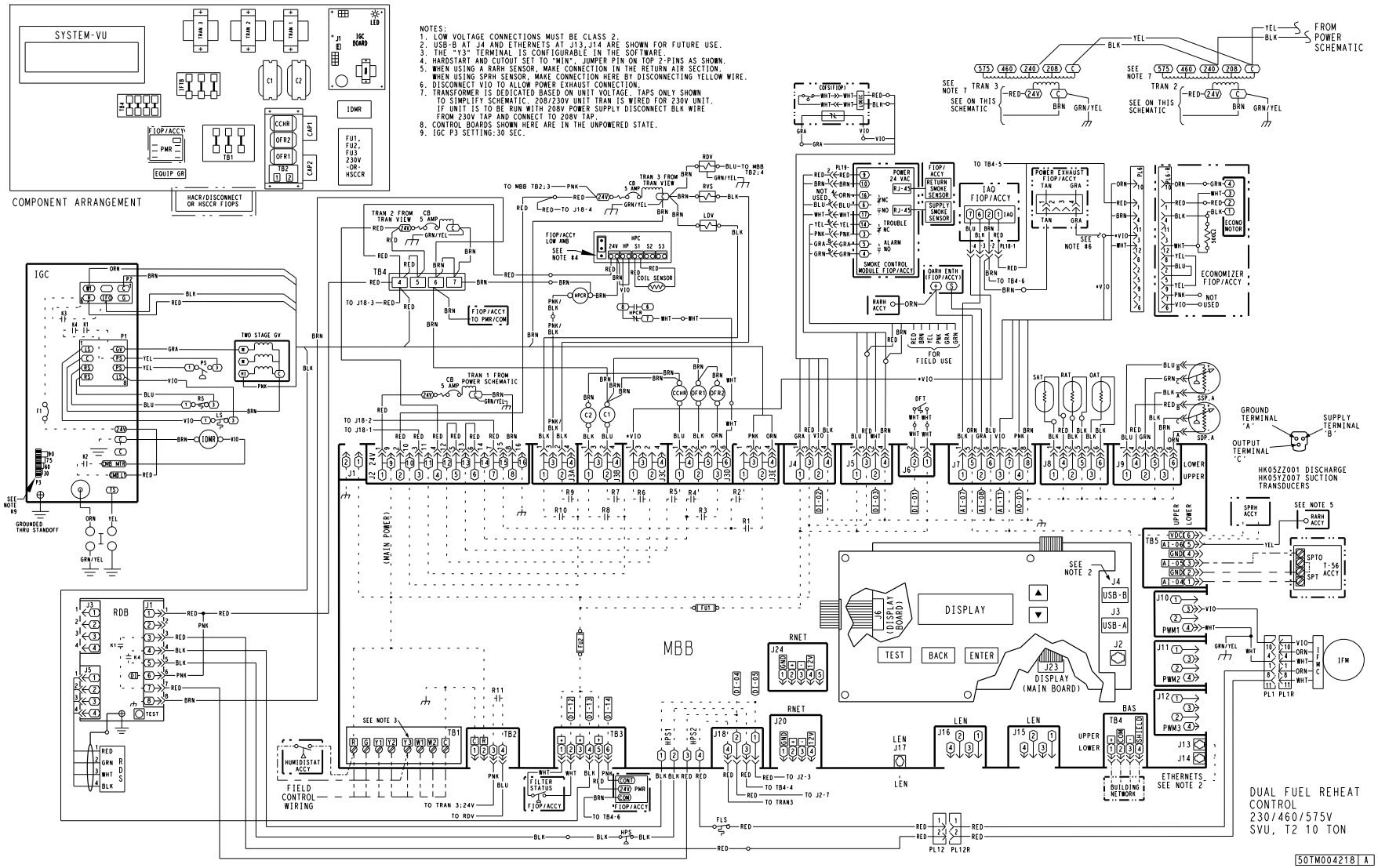

Sequence of operation

General

The SystemVu controller is standard on all 48QE units. The sequence below describes the sequence of operation for 48QE units with and without a factory-installed economizer. For more information regarding the SystemVu controller, see the FEQ/GEQ/QE Series Single Package Rooftop Heat Pump and Hybrid Heat Units with SystemVu Controller Controls, Start-Up, Operation and Troubleshooting manual.

Dissipation

When the factory-installed dissipation system detects a level of refrigerant leak in the unit, a safety dissipation mode will be activated. During this dissipation mode, the thermostat will be disabled and the indoor fan will run at 66% of the maximum speed of the motor. When the refrigerant leak levels are normal for 5 minutes, the unit will return to normal operation.

Cooling without economizer

When the thermostat calls for cooling, terminals G and Y1 are energized. The indoor fan will run at the low fan speed and the C1 compressor contactor (CC) is energized causing the compressor and outdoor fan to run. The low indoor fan speed is 50% or 60% of the user set fan speed, depending on unit size.

If additional cooling is needed, the thermostat will add the call for Y2. This will increase the indoor fan speed to the user set fan speed and energize the C2 contactor and second compressor for full compressor capacity. The outdoor fan runs at different speeds for Y1 and Y2 depending on unit size.

When the thermostat removes the call for Y2 but leaves the Y1, the indoor fan will slow to the reduced percentage of the user set fan speed, the C2 contactor will de-energize, the second compressor will turn off, and the outdoor fan will remain on. When the thermostat removes the call for Y1 the compressor contactor will de-energize shutting down the compressor and the outdoor fan. When the thermostat removes the call for G, the indoor fan will turn off after the specific unit fan off delay.

NOTE: Per ASHRAE 90.1-2019 and IECC-2018 standards, during the first stage cooling operation the SystemVu controller will adjust the fan motor speed to provide 50% or 60% of the total cfm established for the unit.

Cooling with economizer

For detailed information on free cooling operation for 48QE units with factory-installed economizer see the FEQ/GEQ/QE Series Single Package Rooftop Heat Pump and Hybrid Heat Units with SystemVu Controller Controls, Start-Up, Operation and Troubleshooting manual.

Defrost

When the temperature of the outdoor coil drops below 28°F (–2°C) as sensed by the defrost switch and the defrost timer is at the end of a timed period (adjustable between 30 and 120 minutes), the reversing valve solenoid (RVS) is energized and the outdoor fans are de-energized. This switches the position of the reversing valve and shuts off the outdoor fan. Gas heating will be energized.

Heating, unit with economizer

Upon a request for heating from the space thermostat terminal, W1 will be energized with 24V. The indoor fan will run at high speed, and outdoor fan C1 and C2 will be energized in heating. The indoor fan, outdoor fans, and compressor are energized. The reversing valve is de-energized and switch positions. The economizer is set to minimum position (ventilation position). If the space temperature continues to fall with W1 energized, W2 will bring on gas heat. As the space temperature rises the W2 will de-energize and the compressors will continue to operate, until the thermostat set point is achieved de-energizing W1. If the thermostat is set to Auto, the indoor fan will de-energize and the economizer will close. If the indoor fan is set to On, the indoor fan will continue to operate and the economizer will remain at minimum position (vent position). On units equipped for 2 stages of heat, when additional heat is needed, second stage of gas heat energized through W2. The economizer damper moves to the minimum position. When the thermostat is satisfied, the damper moves to the fully closed position.

Heating, unit without economizer

Upon a request for heating from the space thermostat, terminal W1 will be energized with 24V. The indoor fan, outdoor fan C1 and C2 will be energized. The indoor fan, outdoor fans, and compressor 1, and compressor 2 are energized and reversing valves are deenergized and switch position. If the space temperature continues to fall while W1 is energized, W2 will be energized with 24V, and gas heat will be energized. When the space thermostat is satisfied, W2 will be de-energized first, and gas heating will be de-energized. Upon a further rise in space temperature, W1 will be de-energized.

Gas heating

NOTE: WeatherMaster® units have 2 stages of gas heat.

When the thermostat calls for heating, power is sent to W on the Integrated Gas Controller (IGC) board. An LED (light-emitting diode) on the IGC board turns on and remains on during normal operation. A check is made to ensure that the roll-out switch and limit switch are closed. If the check was successful, the induced-draft motor is energized, and when its speed is satisfactory, as proven by the flue gas pressure switch, the ignition activation period begins. The burners will ignite within 5 seconds. If the burners do not light, there is a 22 second delay before another 5 second attempt. This sequence is repeated for 15 minutes or until the burners light. If, after the 15 minutes, the burners still have not lit, heating is locked out. To reset the control, break 24-v power to the thermostat.

When ignition occurs, the IGC board will continue to monitor the condition of the roll-out switch, the limit switches, the flue gas pressure switch, as well as the flame sensor. 45 seconds after ignition occurs, assuming the unit is controlled through a room thermostat set for fan auto, the indoor-fan motor will energize (and the outdoor-air dampers will open to their minimum position). If, for some reason, the over-temperature limit opens prior to the start of the indoor fan blower, the unit will shorten the 45 second delay to 5 seconds less than the time from initiation of heat to when the limit tripped. Gas will not be interrupted to the burners and heating will continue. Once the fan-on delay has been modified, it will not change back to 45 seconds until power is reset to the control. When additional heat is required, W2 closes and initiates power to the second stage of the main gas valve. When the thermostat is satisfied, W1 and W2 open and the gas valve closes, interrupting the flow of gas to the main burners. If the unit is controlled through a room thermostat set for fan auto, the indoor-fan motor will continue to operate for an additional 45 seconds then stop. An LED indicator is provided on the IGC to monitor operation.

Hybrid heating

48QE units can run mechanical heating and gas heating simultaneously. When the thermostat calls for heating, terminals G and W1 are energized. The indoor fan will run at the user set fan speed. The C1 and C2 compressor contactors (CC) are energized causing the compressors and outdoor fans to run. The W1 call runs mechanical heating only.

If additional heating is needed, the thermostat will add the call for W2. This enables the unit to run both mechanical heating and adds one stage of gas heating. The first stage of gas heating energizes depending on the supply air temperature of the unit. The second stage of gas heating is enabled when the first stage of gas heating has been running for 30 minutes and the outdoor air temperature is lower than the 3 stage maximum temperature.

If the supply air temperature is below the Maximum SAT Lower Level (***LOWER MAX SET***), the unit will run the first stage of gas heating on top of mechanical heating. Both mechanical and the first stage of gas heat run simultaneously until the supply air temperature reaches the Maximum SAT Upper Level (***UPPER MAX SAT***). When the upper max supply air temperature is reached, one stage of gas heating is removed. Gas heat cycles on and off within the range of the lower max supply air temperature and upper max supply air temperature.

When the thermostat removes the call for W2 but leaves the W1, gas heat staging will be removed and the unit runs mechanical heating only. When the thermostat removes the call for W1, the compressor contactors will de-energize shutting down the compressors and the outdoor fans. When the thermostat removes the call for G, the indoor fan will turn off after the specific fan off delay.

If the outside air temperature is below the mechanical heat lockout temperature [30°F (–1°C) as a default from the factory, but adjustable between –20°F and 40°F (–29°C and 4°C)], the unit will follow the same heat sequencing as outlined in the gas heating section. The mechanical heat lockout temperature is adjustable to ensure building owners can customize operation to their building's needs.

NOTE: Temperatures specified are for default configuration.

Optional Humidi-MiZer® dehumidification system

Units with the factory-installed Humidi-MiZer system option are capable of providing multiple modes of improved dehumidification as a variation of the normal cooling cycle. The Humidi-MiZer system option includes additional valves in the liquid line and discharge line of each refrigerant circuit, and a small reheat condenser coil downstream of the evaporator on the air side. Select units have a head pressure controller for variable speed operation of the outdoor fan(s). Operation of the revised refrigerant circuit for each mode is described below.

The Humidi-MiZer system provides 3 sub-modes of operation: Cool, Reheat1, and Reheat2.

- Cool mode — Provides a normal ratio of Sensible and Latent Cooling effect from the evaporator coil.
- Reheat1 — Provides increased Latent Cooling while slightly reducing the Sensible Cooling effect.
- Reheat2 — Provides normal Latent Cooling but with null or minimum Sensible Cooling effect delivered to the space.

The Reheat1 and Reheat2 modes are available when the unit is not in a heating mode and when the system has not locked out reheat in colder ambient conditions.

Refer to the following figures for piping flow diagrams.

Normal Cooling Mode

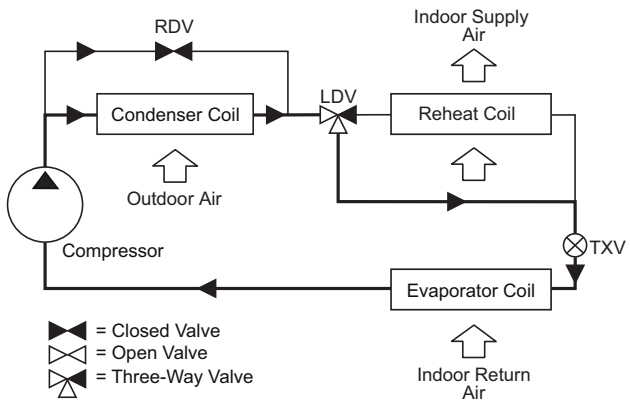

Subcooling Mode (REHEAT1)

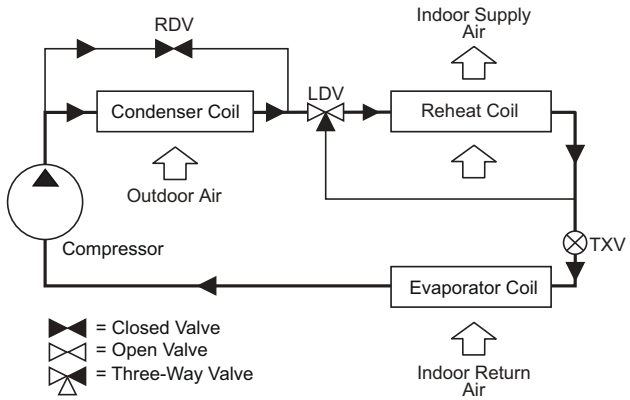

Hot Gas Reheat Mode (REHEAT2)

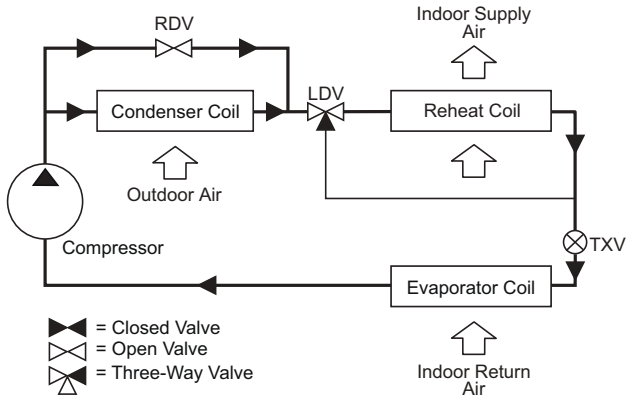

LEGEND

RDV — Reheat Discharge Valve
LDV — Liquid Diverter Valve (Three-Way Valve)
TXV — Thermostatic Expansion Valve

SystemVu™ controller (factory option)

For detailed information on operating the 48QE unit's SystemVu controller refer to FEQ/GEQ/QE Series Single Package Rooftop Heat Pump and Hybrid Heat Units with SystemVu Controller Controls, Start-Up, Operation and Troubleshooting manual.

Minimum operating ambient temperature (cooling)

In mechanical cooling mode, your Carrier rooftop unit can safely operate down to an outdoor ambient temperature of 40°F (4°C) (or 0°F [–18°C] for size 09 models). It is possible to provide cooling at lower outdoor ambient temperatures by using less outside air, economizers, and/or accessory low ambient kits.

Maximum operating ambient temperature (cooling)

The maximum operating ambient temperature for cooling mode is 125°F (52°C). While cooling operation above 125°F (52°C) may be possible, it could cause either a reduction in performance, reliability, or a protective action by the unit's internal safety devices.

Multiple motor and drive packages

Some applications need larger horsepower motors, some need more airflow, and some need both. Regardless of the case, your Carrier expert has a factory installed combination to meet your application. A wide selection of motors are available, factory installed, to handle nearly any application.

Stainless steel heat exchanger

The stainless steel heat exchanger provides the tubular heat exchanger be made out of a minimum 20 gauge type 409 stainless steel for applications where the mixed air to the heat exchanger is expected to drop below 45°F (7°C). The stainless steel heat exchanger is standard on all 48QE units.

Minimum mixed air temperature

Using the factory settings, the minimum temperatures for the mixed air (the combined temperature of the warm return air and the cold outdoor air) entering the dimpled, gas heat exchangers are shown in the following table.

Minimum Temperature for Mixed Air Temperature

STAINLESS STEEL HEAT EXCHANGER
40°F (4°C) Continuous
35°F (2°C) Intermittent

Operating at lower mixed-air temperatures may be possible, if a field-supplied, outdoor air thermostat initiates both heat stages when the temperature is less than the minimum temperatures listed above. Please contact your local Carrier representative for assistance.

Minimum and maximum airflow (heating and cooling)

To maintain safe and reliable operation of your rooftop, operate within the heating airflow limits during heating mode and cooling airflow limits during cooling mode. Operating above the maximum may cause blow-off, undesired airflow noise, or airflow related problems with the rooftop unit. Operating below the minimum may cause problems with coil freeze-up and unsafe heating operation. Heating and cooling limitations differ when evaluating operating cfm, minimum value is the HIGHER of the cooling and heating minimum cfm values published on page 7 and the maximum value is the LOWER of the cooling and heating minimum values published on page 7.

Heating-to-cooling changeover

Your unit will automatically change from heating to cooling mode when using a thermostat with an auto-changeover feature.

Airflow

All units are draw-though in cooling mode and blow-through in heating mode.

Outdoor air application strategies

Economizers reduce operating expenses and compressor run time by providing a free source of cooling and a means of ventilation to match application changing needs. In fact, they should be considered for most applications. Also, consider the various economizer sensors required to accomplish your application goals. Please contact your local Carrier representative for assistance.

Motor limits, brake horsepower (bhp)

Due to internal design of Carrier units, the air path, and specially designed motors, the full horsepower (maximum continuous bhp) band, as listed in the Fan Performance tables, can be used with the utmost confidence. There is no need for extra safety factors, as Carrier motors are designed and rigorously tested to use the entire, listed bhp range without either nuisance tripping or premature motor failure.

Propane heating

Propane has different physical qualities than natural gas. As a result, propane requires different fuel to air mixture. To optimize the fuel/air mixture for propane, Carrier sells different burner orifices in an easy to install accessory kit. To select the correct burner orifices or determine the heat capacity for a propane application, use either the selection software, or the unit's service manual.

High altitude heating

High altitudes have less oxygen, which affects the fuel/air mixture in heat exchangers. In order to maintain a proper fuel/air mixture, heat exchangers operating in altitudes above 2000 ft (610 m) require different orifices. To select the correct burner orifices or determine the heat capacity for a high altitude application, use either the selection software, or the unit's service manual.

High altitudes have less oxygen, which means heat exchangers need less fuel. The new gas orifices in this field-installed kit make the necessary adjustment for high altitude applications. They restore the optimal fuel to air mixture and maintain healthy combustion on altitudes above 2000 ft (610 m).

NOTE: Typical natural gas heating value ranges from 975 to 1050 Btu/ft^3 at sea level nationally. The heating value goes down approximately 1.7% per every thousand feet elevation. Standard factory orifices can typically be used up to 2000 ft (610 m) elevation without any operational issues.

Sizing a rooftop

Bigger is not necessarily better. While an air conditioner needs to have enough capacity to meet the design loads, it does not need excess capacity. In fact, excess capacity typically results in very poor part load performance and humidity control.

Using higher design temperatures than ASHRAE recommends for your location, adding "safety factors" to the calculated load, are all signs of oversizing air conditioners. Oversizing the air conditioner leads to poor humidity control, reduced efficiency, higher utility bills, larger indoor temperature swings, excessive noise, and increased wear and tear on the air conditioner.

Rather than oversizing an air conditioner, engineers should "right-size" or even slightly "under-size" air conditioners. Correctly sizing an air conditioner controls humidity better; promotes efficiency; reduces utility bills; extends equipment life, and maintains even, comfortable temperatures. Please contact your local Carrier representative for assistance.

Low ambient applications

The optional Carrier economizer can adequately cool your space by bringing in fresh, cool outside air. In fact, when so equipped, accessory low-ambient kit may not be necessary. In low ambient conditions, unless the outdoor air is excessively humid or contaminated, economizer-based "free cooling" is the preferred less costly and energy conscious method. In low ambient applications where outside air might not be desired (such as contaminated or excessively humid outdoor environments), your Carrier rooftop can operate to ambient temperatures down to –0°F (–18°C) using the recommended accessory low ambient controller.

NOTE: 0°F (–18°C) is standard on size 09 models.

Guide specifications

Note about this specification:
This specification is in the "Masterformat" as published by the Construction Specification Institute. Please feel free to copy this specification directly into your building spec.

Hybrid Heat Packaged Rooftop

HVAC Guide Specifications

Size Range: **6 to 10 Nominal Tons**

Carrier Model Number: **48QE**07-12**

Part 1 — (23 06 80) Schedules for Decentralized HVAC Equipment

1.01 (23 06 80.13) Decentralized Unitary HVAC Equipment Schedule:

A. 23 06 80.13.A.) Rooftop Unit (RTU) Schedule:

1. Schedule is per the project specification requirements.

Part 2 — (23 07 16) HVAC Equipment Insulation

2.01 (23 07 16.13) Decentralized, Rooftop Units:

A. (23 07 16.13.A.) Evaporator Fan Compartment:

1. Interior cabinet surfaces shall be insulated with a minimum 1/2 in. thick, minimum 1-1/2 lb density, flexible fiberglass insulation bonded with a phenolic binder, neoprene coated on the air side.
2. Insulation and adhesive shall meet NFPA 90A requirements for flame spread and smoke generation.

B. (23 07 16.13.B.) Gas Heat Compartment:

1. Aluminum foil-faced fiberglass insulation shall be used.
2. Insulation and adhesive shall meet NFPA 90A requirements for flame spread and smoke generation.

Part 3 — (23 09 13) Instrumentation and Control Devices for HVAC

3.01 (23 09 13.23) Sensors and Transmitters:

A. (23 09 13.23.A.) Thermostats:

1. Thermostat must:
   a. energize both "W" and "G" when calling for heat.
   b. have capability to energize 1 or 2 stages of cooling and 2 different stages of heating.
   c. be heat pump design and include capability for occupancy scheduling.

Part 4 — (23 09 23) Direct Digital Control System for HVAC

4.01 (23 09 23.13) Decentralized, Rooftop Units:

A. (23 09 23.13.A.) SystemVu™ intelligent integrated Direct Digital Control (DDC) shall provide:

1. Integrated unit operation for comfort cooling, heating ventilation as well as all monitoring, recording and reporting capabilities. Controller shall also provide diagnostics and alarms of abnormal unit operation through the controller. Controller shall have an intuitive user display and be able to be used in a standalone operation or via building automation system (BAS).
2. Quick Unit Status LEDs of: Run — meaning all systems are go, ALERT — that indicates there is currently a non-critical issue with the unit, like filters need to be replaced and FAULT — that indicates the unit has a critical issue and will possibly shut down.
3. Six large navigation keys for easy access. Navigation keys shall consist of: TEST, BACK, ENTER, and MENU along with UP and DOWN arrows.
4. Full back lit user display with 4 line by 30 character text capabilities. Display menu shall be designed to provide guided major menus and sub menus main menus provided below:
   a. Shutdown Unit
   b. Run Status
   c. Settings
   d. Alerts/Faults
   e. Service
   f. Inputs
   g. Outputs
   h. USB
5. The capability for standalone operation with conventional thermostat/sensor or use with building automation systems (BAS) of Carrier i-Vu®, BACnet®[1], and Carrier Comfort Network® (CCN) systems. No special modules or boards are required for these capabilities. Has the capability to work with Equipment Touch™ and System Touch™ devices and ZS Sensors.
6. The ability to read refrigerant pressures at display or via BAS network of; Discharge Pressure and Suction Pressure. The need for traditional refrigerant gauges is not required.
7. USB Data Port for flash drive interaction. This will allow the transfer of data for uploads, downloads, perform software upgrades, back-up and restore data and file transfer data such as component number of starts and run hours.
8. Reverse Rotation Protection of compressors if field 3-phase wiring is misapplied.

1. Third-party trademarks and logos are the property of their respective owners.

9. Provide Service Capabilities of:
   a. Auto run test
   b. Manual run test
   c. Component run hours and starts
   d. Commissioning reports
   e. Data logging
   f. Alarm history
10. Economizer control and diagnostics. Set up economizer operation, receive feedback from actuator. Also meets the most recent California Title 24, ASHRAE®[1] 90.1 and IECC®[1] Fault Detection and Diagnostic (FDD) requirements.
11. Unit cooling operation down to 40°F (4°C).
12. Controller shall have easy access connections around the controller perimeter area and consist of Mate-N-Lok®[1], terminal block and RJ style modular jack connections.
13. 365 day real time clock, 20 holiday schedules along with occupied and unoccupied scheduling.
14. Auto-Recognition for easy installation and commissioning of devices like economizers, space sensors etc.
15. A 5°F (3°C) temperature difference between cooling and heating setpoints to meet the latest ASHRAE 90.1 Energy Standard.
16. Contain return air sensor, supply air sensor and outdoor air sensor to help monitor and provide data for the unit comfort operation, diagnostic and alarms.
17. Use of Carrier's field accessory Equipment Touch and System Touch devices.
18. Units with the factory-installed Humidi-MiZer® system option are capable of providing multiple modes of improved dehumidification as a variation of the normal cooling cycle.
19. Supply Air Tempering control operates the gas or electric heat to maintain a minimum supply air temperature during conditions where very cold outdoor air causes the supply air temperature to fall below the configured Supply Air Tempering Setpoint. This occurs during periods where DCV is active and increasing the amount of outdoor air or in cases where the system is operating at very low airflow and the calculated economizer position has increased to maintain a constant ventilation rate.
20. Demand limiting in SystemVu™ is achieved through setpoint expansion. The systems heating and cooling setpoints are expanded in steps or levels. The degree to which the setpoints may be expanded is defined by the 6 demand level offsets and the 2 commanded demand limit levels.
21. 3-year limited part warranty.

Part 5 — (23 09 33) Electric and Electronic Control System for HVAC

5.01 (23 09 33.13) Decentralized, Rooftop Units:

A. (23 09 33.13.A.) General:
   1. Shall be complete with self-contained low-voltage control circuit protected by a resettable circuit breaker on the 24-v transformer side. Transformer shall have 75 VA capability.
   2. Shall utilize color-coded wiring.
   3. Shall include a unit control board (SystemVu controller main base board) to conveniently and safely provide connection points for vital control functions such as: smoke detectors, phase monitor, gas controller, economizer, thermostat, DDC control options, and low and high pressure switches.
   4. The heat exchanger shall be controlled by an integrated gas controller (IGC) microprocessor. See heat exchanger section of this specification.
   5. Unit shall include a minimum of one 8-pin screw terminal connection board for connection of control wiring.
   6. Shall include integrated defrost system to prevent excessive frost accumulation during heating duty, and shall be controlled as follows:
      a. Defrost shall be initiated on the basis of time and coil temperature.
      b. A 30 to 120 minute timer shall activate the defrost cycle only if the coil temperature is low enough to indicate a heavy frost condition.
      c. Defrost cycle shall terminate when defrost thermostat is satisfied and shall have a positive termination time of 10 minutes.

B. (23 09 33.13.B.) Safeties:
   1. Compressor over-temperature, over-current. High internal pressure differential.
   2. Low Pressure Switch:

      Low pressure switch shall use different color wire than the high pressure switch. The purpose is to assist the installer and service technician to correctly wire and or troubleshoot the rooftop unit.
   3. High Pressure Switch:

      High pressure switch shall use different color wire than the low pressure switch. The purpose is to assist the installer and service technician to correctly wire and or troubleshoot the rooftop unit.
   4. Automatic Reset, Motor Thermal Overload Protector.
   5. Heating section shall be provided with the following minimum protections:
      a. High temperature limit switches.

1. Third-party trademarks and logos are the property of their respective owners.

b. Induced draft motor speed sensor.
c. Flame rollout switch.
d. Flame proving controls.

6. A2L Refrigerant Leak Dissipation System:
   a. Leak dissipation system shall consist of control board and A2L sensor certified to UL-60335-2-40, integrated with SystemVu controller.
   b. System shall be designed for the life of the unit.
   c. Dissipation system shall be automatic, ship pre-wired, and require no additional field connections to thermostat to function.
   d. Refrigerant leak sensor shall be installed in UL-certified location and orientation. Sensor shall be self-correcting and resettable. Single use refrigerant leak sensor shall not be permitted.
   e. Factory-installed dissipation controller shall use onboard microprocessor and include:
      1) Automatic leak detection and dissipation algorithm.
      2) Automatic reset after a dissipation event has occurred.
      3) Onboard LED with flash code to indicate current unit status and hardware failures.
      4) Depressible "Test" button to allow for a system test and recall/reset of leak detection history.
      5) 24-v dry contact alarm terminal to allow for external notification of leak detection.
      6) Ability to notify BAS system of dissipation event via readable alarm point through SystemVu.
      7) Recallable dissipation alarm history on SystemVu controller.
   f. Dissipation control board shall be accessible via normal maintenance locations and LED shall be visible.
   g. Dissipation system shall "Fail Safe" per UL requirements.
   h. Dissipation shall allow smoke and building fire systems to override in case of event.

Part 6 — (23 09 93) Sequence of Operations for HVAC Controls

6.01 (23 09 93.13) Decentralized, Rooftop Units:

A. (23 09 93.13.A.) INSERT SEQUENCE OF OPERATION

Part 7 — (23 40 13) Panel Air Filters

7.01 (23 40 13.13) Decentralized, Rooftop Units:

A. (23 40 13.13.A.) Standard Filter Section:
   1. Shall consist of factory installed, low velocity, disposable 2 in. thick fiberglass filters of commercially available sizes.
   2. Unit shall use only one filter size. Multiple sizes are not acceptable.
   3. Filters shall be accessible through an access panel with "no-tool" removal as described in the unit cabinet section of this specification (23 81 19.13.G).

Part 8 — (23 81 19) Self-Contained Air Conditioners

8.01 (23 81 19.13) Small-Capacity Self-Contained Air Conditioners:

A. (23 81 19.13.A.) General:
   1. Outdoor, rooftop mounted, electrically controlled, heating and cooling unit utilizing a fully hermetic scroll compressor(s) for cooling duty and gas combustion for heating duty.
   2. Factory assembled, single-piece heating and cooling rooftop unit. Contained within the unit enclosure shall be all factory wiring, piping, controls, and special features required prior to field start-up.
   3. Unit shall use Puron Advance™ (R-454B) refrigerant.
   4. Unit shall be installed in accordance with the manufacturer's instructions.
   5. Unit must be selected and installed in compliance with local, state, and federal codes.

B. (23 81 19.13.B.) Quality Assurance:
   1. Unit meets DOE and ASHRAE 90.1 minimum efficiency requirements.
   2. Unit shall be rated in accordance with AHRI Standards 340/360.
   3. Unit shall be designed to conform to ASHRAE 15.
   4. Unit shall be UL-tested and certified in accordance with ANSI Z21.47 Standards and UL-listed and certified under Canadian standards as a total package for safety requirements.
   5. Insulation and adhesive shall meet NFPA 90A requirements for flame spread and smoke generation.
   6. Unit casing shall be capable of withstanding 500-hour salt spray exposure per ASTM B117 (scribed specimen).
   7. Unit shall be designed in accordance with ISO 9001, and shall be manufactured in a facility registered by ISO 9001:2015.
   8. Roof curb shall be designed to conform to NRCA Standards.
   9. Unit shall be subjected to a completely automated run test on the assembly line. The data for each unit will be stored at the factory, and must be available upon request.
   10. Unit shall be designed in accordance with UL Standards 60335-1 and 60335-2-40, including testing to withstand rain. Unit shall be IPX4 rated.

11. Unit shall be constructed to prevent intrusion of snow and tested to prevent snow intrusion into the control box up to 40 mph.
12. Unit shake tested to assurance level 1, ASTM D4169 to ensure shipping reliability.

C. (23 81 19.13.C.) Delivery, Storage, and Handling:
1. Unit shall be stored and handled per manufacturer's recommendations.
2. Lifted by crane requires either shipping top panel or spreader bars.
3. Unit shall only be stored or positioned in the upright position.

D. (23 81 19.13.D.) Project Conditions:
1. As specified in the contract.

E. (23 81 19.13.E.) Operating Characteristics:
1. Unit shall be capable of starting and running at 125°F (52°C) ambient outdoor temperature, meeting maximum load criteria of AHRI Standard 340/360 at ±10% voltage.
2. Compressor with standard controls shall be capable of operation down to 40°F (4°C) ambient outdoor temperatures.
3. Compressor with standard controls shall be capable of operation down to –10°F (–23°C) ambient outdoor temperatures or lower in heat pump heating mode.
4. Unit shall discharge supply air vertically or horizontally as shown on contract drawings.
5. Unit shall be factory configured for vertical supply and return configurations.
6. Unit shall be field convertible from vertical to horizontal airflow on all models. No special kit required except on 12 size models that require a Supply Duct Kit field installed for horizontal air flow.
7. Unit shall be capable of mixed operation: vertical supply with horizontal return or horizontal supply with vertical return.

F. (23 81 19.13.F.) Electrical Requirements:
1. Main power supply voltage, phase, and frequency must match those required by the manufacturer.

G. (23 81 19.13.G.) Unit Cabinet:
1. Unit cabinet shall be constructed of galvanized steel, and shall be bonderized and coated with a prepainted baked enamel finish on all externally exposed surfaces.
2. Unit cabinet exterior paint shall be: film thickness, (dry) 0.003 in. minimum, gloss (per ASTM D523, 60°F/16°C): 60, Hardness: H-2H Pencil hardness.
3. Evaporator fan compartment interior cabinet insulation shall conform to AHRI Standards 340/360 minimum exterior sweat criteria. Interior surfaces shall be insulated with a minimum 1/2 in. thick, 1 lb density, flexible fiberglass insulation, neoprene coated on the air side. Aluminum foil-faced fiberglass insulation shall be used in the heat compartment.
4. Base of unit shall have a minimum of 4 locations for thru-the-base gas and electrical connections (factory-installed or field-installed), standard.
5. Base Rail:
   a. Unit shall have base rails on a minimum of 2 sides.
   b. Holes shall be provided in the base rails for rigging shackles to facilitate maneuvering and overhead rigging.
   c. Holes shall be provided in the base rail for moving the rooftop by fork truck.
   d. Base rail shall be a minimum of 16 gauge thickness.
6. Condensate Pan and Connections:
   a. Shall be a sloped condensate drain pan made of a corrosion resistant material.
   b. Shall comply with ASHRAE Standard 62.
   c. Shall use a 3/4 in. 14 NPT drain connection, possible either through the bottom or side of the drain pan. Connection shall be made per manufacturer's recommendations.
7. Top Panel:
   Shall be a single piece top panel on 07-09 sizes and two piece on 12 size models.
8. Gas Connections:
   a. All gas piping connecting to unit gas valve shall enter the unit cabinet at a single location on side of unit (horizontal plane).
   b. Thru-the-base capability
      1) Standard unit shall have a thru-the-base gas-line location using a raised, embossed portion of the unit basepan.
      2) Optional, factory approved, water-tight connection method must be used for thru-the-base gas connections.
      3) No basepan penetration, other than those authorized by the manufacturer, is permitted.
9. Electrical Connections:
   a. All unit power wiring shall enter unit cabinet at a single, factory prepared, knockout location.
   b. Thru-the-base capability.
      1) Standard unit shall have a thru-the-base electrical location(s) using a raised, embossed portion of the unit basepan.
      2) Optional, factory approved, water-tight connection method must be used for thru-the-base electrical connections.
      3) No basepan penetration, other than those authorized by the manufacturer, is permitted.

10. Component Access Panels (standard):
    a. Cabinet panels shall be easily removable for servicing.
    b. Unit shall have one factory installed, toolless, removable, filter access panel.
    c. Panels covering control box, indoor fan, indoor fan motor, gas components (where applicable), and compressors shall have molded composite handles.
    d. Handles shall be UV modified, composite. They shall be permanently attached, and recessed into the panel.
    e. Screws on the vertical portion of all removable access panel shall engage into heat resistant, molded composite collars.
    f. Collars shall be removable and easily replaceable using manufacturer recommended parts.

H. (23 81 19.13.H.) Gas Heat:
1. General:
    a. Heat exchanger shall be an induced draft design. Positive pressure heat exchanger designs shall not be allowed.
    b. Shall incorporate a direct-spark ignition system and redundant main gas valve.
    c. Gas supply pressure at the inlet to the rooftop unit gas valve must match that required by the manufacturer.
    d. Mechanical heating cutoff temperature (i.e., the outdoor air temperature the unit disables mechanical compression heating and enables exclusive gas heating) shall be adjustable through SystemVu controller.
2. The heat exchanger shall be controlled by an integrated gas controller (IGC) microprocessor.
    a. IGC board shall notify users of fault using an LED (light-emitting diode).
    b. The LED shall be visible without removing the control box access panel.
    c. IGC board shall contain algorithms that modify evaporator fan operation to prevent future cycling on high temperature limit switch.
    d. Unit shall be equipped with anti-cycle protection with one short cycle on unit flame rollout switch or 4 continuous short cycles on the high temperature limit switch. Fault indication shall be made using an LED.
3. Stainless Steel Heat Exchanger Construction:
    a. Use energy saving, direct-spark ignition system.
    b. Use a redundant main gas valve.
    c. Burners shall be of the in-shot type constructed of aluminum-coated steel.
    d. All gas piping shall enter the unit cabinet at a single location on side of unit (horizontal plane).
    e. The stainless steel heat exchanger shall be of the tubular-section type, constructed of a minimum of 20-gauge type 409 stainless steel.
    f. Type 409 stainless steel shall be used in heat exchanger tubes and vestibule plate.
    g. Complete stainless steel heat exchanger allows for greater application flexibility.
4. Induced Draft Combustion Motor and Blower
    a. Shall be a direct-drive, single inlet, forward-curved centrifugal type.
    b. Shall be made from steel with a corrosion resistant finish.
    c. Shall have permanently lubricated sealed bearings.
    d. Shall have inherent thermal overload protection.
    e. Shall have an automatic reset feature.

I. (23 81 19.13.I.) Coils:
1. Standard Aluminum Fin-Copper Tube Coils:
    a. Standard evaporator and condenser coils shall have aluminum lanced plate fins mechanically bonded to seamless internal helically grooved copper tubes with all joints brazed.
    b. Evaporator coils shall be leak tested to 150 psig, pressure tested to 450 psig, and qualified to UL 60335-2-40 burst test at 1775 psig.
    c. Condenser coils shall be leak tested to 150 psig, pressure tested to 650 psig, and qualified to UL 60335-2-40 burst test at 1980 psig.
2. Optional Pre-coated Aluminum-Fin Condenser Coils:
    a. Shall have a durable epoxy-phenolic coating to provide protection in mildly corrosive coastal environments.
    b. Coating shall be applied to the aluminum fin stock prior to the fin stamping process to create an inert barrier between the aluminum fin and copper tube.
    c. Epoxy-phenolic barrier shall minimize galvanic action between dissimilar metals.
    d. Corrosion durability of fin stock shall be confirmed through testing to be no less than 1000 hours salt spray per ASTM B117.
    e. Corrosion durability of fin stock shall be confirmed through testing to have no visible corrosion after 48 hour immersion in a room temperature solution of 5% salt, 1% acetic acid.

f. Fin stock coating shall pass 2000 hours of the following: one week exposure in the prohesion chamber followed by one week of accelerated ultraviolet light testing. Prohesion chamber: the solution shall contain 3.5% sodium chloride and 0.35% ammonium sulfate. The exposure cycle is one hour of salt fog application at ambient followed by one hour drying at 95°F (35°C).

3. Optional Copper-Fin Evaporator and Condenser Coils:
   a. Shall be constructed of copper fins mechanically bonded to copper tubes and copper tube sheets.
   b. Galvanized steel tube sheets shall not be acceptable.
   c. A polymer strip shall prevent coil assembly from contacting the sheet metal coil pan to minimize potential for galvanic corrosion between coil and pan.
4. Optional E-coated Aluminum-Fin Evaporator and Condenser Coils:
   a. Shall have a flexible epoxy polymer coating uniformly applied to all coil surface areas without material bridging between fins.
   b. Coating process shall ensure complete coil encapsulation of tubes, fins and headers.
   c. Color shall be high gloss black with gloss per ASTM D523.
   d. Uniform dry film thickness from 0.8 to 1.2 mil on all surface areas including fin edges.
   e. Superior hardness characteristics of 2H per ASTM D3363 and cross-hatch adhesion of 4B-5B per ASTM D3359.
   f. Impact resistance shall be up to 160 in.-lb (ASTM D2794).
   g. Humidity and water immersion resistance shall be up to minimum 1000 and 250 hours respectively (ASTM D2247 and ASTM D870).
   h. Corrosion durability shall be confirmed through testing to be no less than 1000 hours salt spray per ASTM B117.

J. (23 81 19.13.J.) Refrigerant Components:
1. Refrigerant circuit shall include the following control, safety, and maintenance features:
   a. Thermostatic Expansion Valve (TXV) shall help provide optimum performance across the entire operating range. Shall contain removable power element to allow change out of power element and bulb without removing the valve body.
   b. Refrigerant filter drier — Solid core design with pre and post filter service gauge connections for filter diagnostics and maintenance.
   c. Service gauge connections on suction and discharge lines.
   d. Pressure gauge access through a specially designed access port in the top panel of the unit.
2. There shall be gauge line access port in the skin of the rooftop, covered by a black, removable plug.
   a. The plug shall be easy to remove and replace.
   b. When the plug is removed, the gauge access port shall enable maintenance personnel to route their pressure gauge lines.
   c. This gauge access port shall facilitate correct and accurate condenser pressure readings by enabling the reading with the compressor access panel on.
   d. The plug shall be made of a leak proof, UV-resistant, composite material.
3. Compressors:
   a. Unit shall use tandem scroll compressor assembly on a single refrigeration circuit with two stages of cooling for efficient comfort cooling operation.
   b. Evaporator coils shall be a full active design to help better control latent removal and minimize unconditioned bypass air.
   c. Compressor motors shall be cooled by refrigerant gas passing through motor windings.
   d. Compressors shall be internally protected from high discharge temperature conditions.
   e. Compressors shall be protected from an over-temperature and over-amperage conditions by an internal, motor overload device.
   f. Compressor shall be factory mounted on rubber grommets.
   g. Compressor motors shall have internal line break thermal, current overload and high pressure differential protection.
   h. Crankcase heaters shall not be required for normal operating range, unless required by compressor manufacturer due to refrigerant charge limits.

K. (23 81 19.13.K.) Filter Section:
1. Filters access is specified in the unit cabinet section of this specification.
2. Filters shall be held in place by a pivoting filter tray, facilitating easy removal and installation.
3. Shall consist of factory installed, low velocity, throw-away 2 in. thick fiberglass filters.
4. Filters shall be standard, commercially available sizes.
5. Only one size filter per unit is allowed.

L. (23 81 19.13.L.) Evaporator Fan and Motor with EcoBlue™ Technology:
   1. Direct Drive Evaporator Fan Motor:
      a. Shall be an ECM motor design.
      b. Shall be direct drive design for all static options.
      c. Shall have permanently lubricated bearings.
      d. Shall have inherent automatic-reset thermal overload protection.
      e. Shall have slow ramp up to speed capabilities.
      f. Shall require no fan/motor belts for operation, adjustments and or initial fan speed set up.
      g. Fan set up via SystemVu™ controller shall eliminate the need of removal of blower access door, required on conventional belt drive systems.
      h. Shall be internally protected from electrical phase reversal.
   2. Evaporator Fan:
      a. Speed shall be easily set through SystemVu controller.
      b. Shall provide 2 stage cooling capacity control, the indoor fan speed is automatically controlled to meet the code-compliant <66% low fan speed and 100% at full fan speed operation.
      c. Blower fan shall be a Vane Axial fan design with fan assembly secured directly to ECM motor. Additional shafts, belts, pulleys/sheaves, and bearing blocks to drive fan shall not be permitted or necessary.
      d. Additional variable frequency drive to control fan motor speed shall not be permitted or necessary. All speed control electronics must be onboard fan motor assembly.
      e. Shall be constructed of a high impact composite material stator, rotor, and air inlet casing.
      f. Shall be a patented / pending design with a corrosion resistant material.
      g. Fan assembly design shall be integrated to fan deck, dynamically balanced, and require no additional vibration isolation for normal operation.
      h. Shall have slow ramp up to speed capabilities to help reduce sound and comfort issues typically associated with single speed belt drive systems.
      i. Shall be a slide out design with removal of a few support brackets.
   3. Shall include an easily accessible SystemVu board to conveniently and safely provide connection points for vital control functions such as: smoke detectors, phase monitor, gas controller, economizer, thermostat, DDC control options, and low and high pressure switches.

M. (23 81 19.13.M.) Condenser Fans and Motors:
   1. Condenser Fan Motors:
      a. Shall be a totally enclosed motor.
      b. Shall use permanently lubricated bearings.
      c. Shall have inherent thermal overload protection with an automatic reset feature.
      d. Shall use a shaft-down design on all sizes.
   2. Condenser Fans:
      a. Shall be a direct-driven propeller type fan.
      b. Shall have galvalum blades riveted to steel spider that have corrosion-resistant properties and shall be dynamically balanced.

N. (23 81 19.13.N.) Special Features Options and Accessories:
   1. Integrated EconoMi$er® 2 Low Leak Rate Models.
      a. Integrated, gear driven opposing modulating blade design type capable of simultaneous economizer and compressor operation.
      b. Independent modules for vertical or horizontal return configuration shall be available. Vertical return modules shall be available as a factory-installed option.
      c. Damper blades shall be galvanized steel with composite gears. Plastic or composite blades on intake or return shall not be acceptable.
      d. Shall include all hardware and controls to provide free cooling with outdoor air when temperature and/or humidity are below set points.
      e. Shall be equipped with gear driven dampers for both the outdoor ventilation air and the return air for positive air stream control.
      f. Low leak rate shall be equipped with dampers not to exceed 2% leakage at 1 in. wg pressure differential.
      g. Economizer controller on EconoMi$er 2 models with SystemVu controllers shall be a 4 to 20 mA design controlled directly by the controller. SystemVu controllers meet California Title 24, ASHRAE 90.1 and IECC Fault Detection and Diagnostic (FDD) requirements.
      h. Shall be capable of introducing up to 100% outdoor air.
      i. Shall be equipped with a barometric relief damper capable of relieving up to 100% return air and contain seals that meet ASHRAE 90.1 requirements.
      j. Shall be designed to close damper(s) during loss-of-power situations with spring return built into motor.
      k. Dry bulb outdoor air temperature sensor shall be provided as standard. Enthalpy sensor is also available on factory-installed economizers only. Outdoor air sensor setpoint

shall be adjustable and shall range from 40°F to 100°F (4°C to 38°C). Additional sensor options shall be available as accessories.

l. The economizer controller shall also provide control of an accessory power exhaust unit function. Factory set at 100%, with a range of 0% to 100%.

m. The economizer shall maintain minimum airflow into the building during occupied period and provide design ventilation rate for full occupancy.

n. Dampers shall be completely closed when the unit is in the unoccupied mode.

o. Economizer controller shall accept a 0 to 10 vdc CO_2 sensor input for IAQ/DCV control. In this mode, dampers shall modulate the outdoor air damper to provide ventilation based on the sensor input.

p. Actuator shall be direct coupled to economizer gear. No linkage arms or control rods shall be acceptable.

2. Integrated EconoMi$er 2 Ultra Low Leak Rate Models.

a. Integrated, gear driven opposing modulating blade design type capable of simultaneous economizer and compressor operation.

b. Independent modules for vertical or horizontal return configuration shall be available. Vertical return modules shall be available as a factory-installed option.

c. Damper blades shall be galvanized steel with composite gears. Plastic or composite blades on intake or return shall not be acceptable.

d. Shall include all hardware and controls to provide free cooling with outdoor air when temperature and/or humidity are below set points.

e. Shall be equipped with gear driven dampers for both the outdoor ventilation air and the return air for positive air stream control.

f. Ultra Low Leak design meets California Title 24 section 140.4 and ASHRAE 90.1 requirements for 4 cfm per sq ft on the outside air dampers and 10 cfm per sq ft on the return dampers.

g. Economizer controller on EconoMi$er 2 models with SystemVu™ controller shall be a 4 to 20 mA design controlled directly by the controller. SystemVu controllers meet California Title 24, ASHRAE 90.1 and IECC Fault Detection and Diagnostic (FDD) requirements.

h. Shall be capable of introducing up to 100% outdoor air.

i. Shall be equipped with a barometric relief damper capable of relieving up to 100% return air and contain seals that meet ASHRAE 90.1 requirements.

j. Shall be designed to close damper(s) during loss-of-power situations with spring return built into motor.

k. Dry bulb outdoor air temperature sensor shall be provided as standard. Enthalpy sensor is also available on factory-installed economizers only. Outdoor air sensor setpoint shall be adjustable and shall range from 40°F to 100°F (4°C to 38°C). Additional sensor options shall be available as accessories.

l. The economizer controller shall also provide control of an accessory power exhaust unit function. Factory set at 100%, with a range of 0% to 100%.

m. The economizer shall maintain minimum airflow into the building during occupied period and provide design ventilation rate for full occupancy.

n. Dampers shall be completely closed when the unit is in the unoccupied mode.

o. Economizer controller shall accept a 0 to 10 vdc CO_2 sensor input for IAQ/DCV control. In this mode, dampers shall modulate the outdoor air damper to provide ventilation based on the sensor input.

p. Actuator shall be direct coupled to economizer gear. No linkage arms or control rods shall be acceptable.

3. Two-Position Damper (field-installed only):

a. Damper shall be a Two-Position Damper. Damper travel shall be from the full closed position to the field adjustable %-open setpoint.

b. Damper shall include adjustable damper travel from 25% to 100% (full open).

c. Damper shall include single or dual blade, gear driven dampers and actuator motor.

d. Actuator shall be direct coupled to damper gear. No linkage arms or control rods shall be acceptable.

e. Damper will admit up to 100% outdoor air for applicable rooftop units.

f. Damper shall close upon indoor (evaporator) fan shutoff and/or loss of power.

g. The damper actuator shall plug into the rooftop unit's wiring harness plug. No hard wiring shall be required.

h. Outside air hood shall include aluminum water entrainment filter.

4. Manual Damper (field-installed only):

Manual damper package shall consist of damper, air inlet screen, and rain hood which can be preset to admit up to 25% or 50% outdoor air for year round ventilation.

5. Humidi-MiZer® Adaptive Dehumidification System:
   a. The Humidi-MiZer Adaptive Dehumidification System shall be factory installed and shall provide greater dehumidification of the occupied space by 2 modes of dehumidification operations in addition to its normal design cooling mode:
      1) Subcooling mode further sub cools the hot liquid refrigerant leaving the condenser coil when both temperature and humidity in the space are not satisfied.
      2) Hot gas reheat mode shall mix a portion of the hot gas from the discharge of the compressor with the hot liquid refrigerant leaving the condenser coil to create a 2-phase heat transfer in the system, resulting in a neutral leaving air temperature when only humidity in the space is not satisfied.
      3) Includes low ambient controller.
6. Low Ambient Control Package (field-installed only):
   a. Controller shall control coil head pressure by condenser fan speed modulation or condenser fan cycling and wind baffles.
   b. Shall consist of solid-state control and condenser coil temperature sensor to maintain condensing temperature between 90°F (32°C) and 110°F (43°C) at outdoor ambient temperatures down to –20°F (–29°C).
7. Propane Conversion Kit:
   a. Package shall contain all the necessary hardware and instructions to convert a standard natural gas unit for use with liquefied propane, up to 2000 ft (610 m) elevation.
   b. Additional accessory kits may be required for applications above 2000 ft (610 m) elevation.
8. Flue Shield:

   Flue shield shall provide protection from the hot sides of the gas flue hood.
9. Condenser Coil Hail Guard Assembly (factory or field-installed):
   a. Shall protect against damage from hail.
   b. Shall be louvered type.
10. Unit-Mounted, Non-Fused Disconnect Switch:
   a. Available on 6 to 8.5 ton units with FLA of 80 amps or less, or 10 ton units with FLA of 100 amps or less (460/575V) or 200 amps or less (208/230V).
   b. Switch shall be factory installed, internally mounted.
   c. National Electric Code (NEC) and UL approved non-fused switch shall provide unit power shutoff.
   d. Shall be accessible from outside the unit.
   e. Shall provide local shutdown and lockout capability.
   f. Sized **only** for the unit as ordered from the factory. Does not accommodate field-installed devices.
11. HACR Breaker:
   a. These manual reset devices provide overload and short circuit protection for the unit. Factory wired and mounted with the units, with access cover to help provide environmental protection. On 575-v applications, HACR breaker can only be used with WYE power distribution systems. Use on Delta power distribution systems is prohibited.
   b. Sized **only** for the unit as ordered from the factory. Does not accommodate field-installed devices.
12. Convenience Outlet:
   a. Factory-Installed Powered Convenience Outlet.
      1) Outlet shall be powered from main line power to the rooftop unit.
      2) Outlet shall be powered from line side or load side of disconnect by installing contractor, as required by code. If outlet is powered from load side of disconnect, unit electrical ratings shall be UL certified and rated for additional outlet amperage.
      3) Outlet shall be factory-installed and internally mounted with easily accessible 115-v female receptacle.
      4) Outlet shall include 15 amp GFI receptacles with independent fuse protection.
      5) Voltage required to operate convenience outlet shall be provided by a factory installed step-down transformer.
      6) Outlet shall be accessible from outside the unit.
      7) Outlet shall include a field installed “Wet in Use” cover.
   b. Factory-Installed Non-Powered Convenience Outlet.
      1) Outlet shall be powered from a separate 115/120-v power source.
      2) A transformer shall not be included.
      3) Outlet shall be factory-installed and internally mounted with easily accessible 115-v female receptacle.
      4) Outlet shall include 15 amp GFI receptacles with independent fuse protection.
      5) Outlet shall be accessible from outside the unit.
      6) Outlet shall include a field installed “Wet in Use” cover.

c. Field-Installed Non-Powered Convenience Outlet.
   1) Outlet shall be powered from a separate 115/120-v power source.
   2) A transformer shall not be included.
   3) Outlet shall be field-installed and internally mounted with easily accessible 115-v female receptacle.
   4) Outlet shall include 20 amp GFI receptacles. This kit provides a flexible installation method which allows code compliance for height requirements of the GFCI outlet from the finished roof surface as well as the capability to relocate the outlet to a more convenient location.
   5) Outlet shall be accessible from outside the unit.
   6) Outlet shall include a field installed "Wet in Use" cover.

13. Flue Discharge Deflector:
    a. Flue discharge deflector shall direct unit exhaust vertically instead of horizontally.
    b. Deflector shall be defined as a "natural draft" device by the National Fuel and Gas (NFG) code.
14. Thru-the-Base Connectors:
    a. Shall provide connectors to permit gas and electrical connections to be brought to the unit through the unit basepan.
    b. Minimum of 4 connection locations per unit.
15. Supply Duct Cover (size 12 only):

    Required when field converting the factory standard vertical duct supply to horizontal duct supply configuration. One required per unit.
16. Propeller Power Exhaust:
    a. Power exhaust shall be used in conjunction with an integrated economizer.
    b. Independent modules for vertical or horizontal return configurations shall be available.
    c. Horizontal power exhaust is shall be mounted in return ductwork.
    d. Power exhaust shall be controlled by economizer controller operation. Exhaust fans shall be energized when dampers open past the 0 to 100% adjustable setpoint on the economizer control.
17. Roof Curbs (Vertical):
    a. Full perimeter roof curb with exhaust capability providing separate air streams for energy recovery from the exhaust air without supply air contamination.
    b. Formed galvanized steel with wood nailer strip and shall be capable of supporting entire unit weight.
    c. Permits installation and securing of ductwork to curb prior to mounting unit on the curb.
18. High Altitude Gas Conversion Kit:

    Package shall contain all the necessary hardware and instructions to convert a standard natural gas unit to operate from 2000 to 7000 ft (610 to 2134 m) elevation with natural gas or from 0 to 7000 ft (0 to 2134 m) elevation with liquefied propane.
19. Outdoor Air Enthalpy Sensor:

    The outdoor air enthalpy sensor shall be used to provide single enthalpy control. When used in conjunction with a return air enthalpy sensor, the unit will provide differential enthalpy control. The sensor allows the unit to determine if outside air is suitable for free cooling.
20. Return Air Enthalpy Sensor:

    The return air enthalpy sensor shall be used in conjunction with an outdoor air enthalpy sensor to provide differential enthalpy control.
21. Indoor Air Quality (CO_2) Sensor:
    a. Shall be able to provide demand ventilation indoor air quality (IAQ) control.
    b. The IAQ sensor shall be available in duct mount, wall mount, or wall mount with LED display. The setpoint shall have adjustment capability.
22. Smoke Detectors:
    a. Shall be a 4-wire controller and detector.
    b. Shall be environmentally compensated with differential sensing for reliable, stable, and drift-free sensitivity.
    c. Shall use magnet-activated test/reset sensor switches.
    d. Shall have tool-less connection terminal access.
    e. Shall have a recessed momentary switch for testing and resetting the detector.
    f. Controller shall include:
       1) One set of normally open alarm initiation contacts for connection to an initiating device circuit on a fire alarm control panel.
       2) Two Form-C auxiliary alarm relays for interface with rooftop unit or other equipment.
       3) One Form-C supervision (trouble) relay to control the operation of the Trouble LED on a remote test/reset station.
       4) Capable of direct connection to 2 individual detector modules.
       5) Can be wired to up to 14 other duct smoke detectors for multiple fan shutdown applications.

23. Hinged Access Panels:
    a. Shall provide easy access through integrated quarter turn latches.
    b. Shall be on major panels of: filter, control box, fan motor, and compressor.
24. Condensate Overflow Switch:

    This sensor and related controller monitors the condensate level in the drain pan and shuts down compression operation when overflow conditions occur. It includes:
    a. Indicator light — solid red (more than 10 seconds on water contact — compressors disabled), blinking red (sensor disconnected).
    b. 10 second delay to break — eliminates nuisance trips from splashing or waves in pan (sensor needs 10 seconds of constant water contact before tripping).
    c. Disables the compressor(s) operation when condensate plug is detected, but still allows fans to run for economizer.
25. Foil Faced Insulation:

    Throughout unit cabinet air stream, non-fibrous and cleanable foil faced insulation is used.
26. 4 in. MERV-13 Return Air Filters (factory-installed only):
    a. Factory option to upgrade standard unit filters to 4 in. MERV-13 filters.
    b. Upgraded option shall include factory-installed 4 in. filter rack
    c. Shall not be compatible with horizontal units with field installed economizers.
    d. Shall not be compatible with any single phase units.
27. 4 in. Return Air Rack (field-installed only):
    a. Accessory kit is designed to hold 4 in. MERV-8 or MERV-13 filters. Filters not included in kit.
    b. Shall not be compatible with horizontal units with field installed economizers.
28. 2 in. MERV-13 Return Air Filters:
    a. Accessory kit to field upgrade standard unit filters to 2 in. MERV-13 filters.
    b. Correct size and quantity of filters shall ship in a single box.
29. 2 in. MERV-8 Return Air Filters:
    a. Accessory kit to field upgrade standard unit filters to 2 in. MERV-8 filters.
    b. Correct size and quantity of filters shall ship in a single box.
30. Phase Monitor Control:
    a. Shall monitor the sequence of 3-phase electrical system to provide a phase reversal protection.
    b. Shall monitor the 3-phase voltage inputs to provide a phase loss protection for the 3-phase device.
    c. Will work on either a Delta or Wye power connection.
31. Horn/Strobe Annunciator:
    a. Provides an audible/visual signaling device for use with factory-installed option or field installed accessory smoke detectors.
    b. Requires installation of a field-supplied 24-v transformer suitable for 4.2 VA (AC) or 3.0 VA (DC) per horn/strobe accessory.
    c. Requires field-supplied electrical box, North American 1-gang box, 2 in. x 4 in. (51 mm x 102 mm).
    d. Shall have a clear colored lens.
32. High Short Circuit Current Rating (SCCR) Protection:
    a. Factory-installed option shall provide high short circuit current protection to compressor and all indoor and outdoor fan motors rated at 10 kA against high potential fault current situations. (Standard unit comes with 5 kA rating.)
    b. This option is not available with factory-installed powered convenience outlet, Humidi-MiZer system, non-fused disconnect, HACR breaker, phase loss monitor/protection, or 575-v models.

Manufacturer reserves the right to discontinue, or change at any time, specifications or designs without notice and without incurring obligations.