Product Data

WeatherMaster®
Single Packaged Rooftop

6.0 to 12.5 Nominal Tons

ecoblue™ technology

48/50GC**07, 08, 09, 12, 14

48GC: Single-Package Gas Heating/Electric Cooling Rooftop Units
50GC: Electric Cooling Rooftop Units with Optional Electric Heat
with Puron® Refrigerant (R-410A) and EcoBlue Technology

© 2024 Carrier

Features/Benefits

New Carrier WeatherMaster® packaged rooftop units (RTU) with EcoBlue™ Technology were designed by customers for customers to provide value added benefits never seen in a rooftop unit before.

New features include:

- Up to a 25% IEER improvement over legacy 48/50HC WeatherMaster units
- A patented, industry-first Vane Axial Indoor Fan System powered by an electronically commutated motor for quiet, efficient, and reliable operation. Compared to traditional belt driven forward curved fans, this system has:
  - 75% fewer moving parts
  - Up to 40% better efficiency
  - No fan belts, pulleys, shaft, or shaft bearings
  - Slow ramp up capability for better sound and comfort control
  - Internal protection from phase reversal and phase loss situations
  - High external static capability
  - A slide out blower assembly design to make field repairs easier
- Reliable two-stage cooling operation with tandem scroll compressors technology, fully active evaporator coil, and mixed air temperature protection on all models
- New unit control board with intuitive indoor fan adjustments using a dial and switch
- Reliable copper tube/aluminum fin condenser coil with 5/16 in. tubing to help reduce refrigerant charge and weight versus prior designs

48/50GC WeatherMaster units up to 12.5 tons were designed to easily fit on legacy Carrier R-410A and select competitor curbs, making replacements easier than ever!

With "no-strip" screw collars, handled access panels, and additional factory installed service options, WeatherMaster units are easy to install, easy to maintain, and easy to use.

Our 2-speed staged air volume (SAV) Vane Axial fan system allows for IEERs up to 17.7 without the need for a variable frequency drive. All 07-12 size models are capable of either vertical or horizontal airflow without dedicated model numbers or field install kits. The 14 size models are easily converted to horizontal airflow using a field installed supply air cover kit.

WeatherMaster value-added features include:

- Optional Humidi-MiZer® adaptive dehumidification system for improved part load humidity performance
- SystemVu™ intuitive intelligent controls option that includes:
  - Large full text — multi line display
  - USB Flash Port for data transfer
  - Built in i-Vu®, CCN and BACnet[1] capability
  - Read refrigerant pressures from display — no gauges
  - Quick LED Status — Run, Alert, Fault
  - Conventional thermostat or sensor capabilities
  - Historical component runtime and starts
  - Supply air tempering
- Single point gas and electrical connections
- TXV refrigerant metering devices for improved reliability and performance
- Scroll compressors with internal line-break overload protection
- Units come with an easy access toolless filter door. All filters are the same size in each unit and the filter track tilts out for filter removal and replacement

Installation ease

All WeatherMaster units are field-convertible to horizontal airflow, which makes it easy to adjust to unexpected job-site complications. Lighter units make for easy replacement and aid in the structural approval process. Units have simple, fast plug-in connections to the standard integrated unit control board (UCB) with clearly labeled connections points. Also, a large control box provides room to work and room to mount Carrier accessory controls.

1. Third-party trademarks and logos are the property of their respective owners.

Table of contents

	Page
Features/Benefits	2
Model Number Nomenclature	4
Capacity Ratings	6
Physical Data	10
Options and Accessories	14
Base Unit Dimensions	19
Accessory Dimensions	37
Performance Data	39
Fan Data	61
Electrical Data	102
Typical Wiring Diagrams	131
Sequence of Operation	149
Application Data	151
Guide Specifications — 48GC	153
Guide Specifications — 50GC	164

Features/Benefits (cont)

Easy to maintain

With the new EcoBlue Vane Axial fan system and direct drive ECM motor, there is no longer a need to adjust or replace belts or pulleys as in past designs. This frees up maintenance, installation, and commissioning time allowing you to get off the roof and get more done.

Easy access handles by Carrier provide quick and easy access to all normally serviced components. Our "no-strip" screw system has superior holding power and guides screws into position while preventing the screw from stripping the unit's metal.

Sloped, corrosion resistant composite drain pan sheds water; and won't rust.

Easy to use

The newly re-designed Unit Control Board by Carrier puts all connections and troubleshooting points in one convenient place. Most low voltage connections are made on the same board and make it easy to access it. Setting up the fan is simple by an intuitive switch and rotary dial arrangement.

Carrier rooftops have high and low pressure switches, a new mixed air temperature switch, a filter drier, and 2 in. filters standard.

EcoBlue™ Technology

Direct drive EcoBlue Technology indoor fan system uses Vane Axial fan design and electronically commutated motors.

This Vane Axial design has 75% fewer moving parts, uses up to 40% less energy and has no fan belts, blower bearings or shaft when compared to past forward curved fan systems.

Streamlined control and integration

Carrier controllers make connecting WeatherMaster® rooftops into existing building automation systems easy. The units are available with conventional thermostat controls or SystemVu™ controls for greater comfort, diagnostics and building network integration.

Operating efficiency and flexibility

These 48/50GC packaged rooftops meet the Department of Energy (DOE) 2023 efficiency standard, as well as the latest ASHRAE (American Society of Heating, Refrigerating, and Air-Conditioning Engineers) 90.1 and IECC[1] (International Energy Conservation Code) minimum IEER efficiency requirements.

Comfort control

Carrier's patented Humidi-MiZer® adaptive dehumidification system is an all-inclusive factory-installed option on gas heating/electric cooling and electric cooling/electric heat models. This system provides reliable, flexible operation to meet indoor part load sensible and latent requirements.

---

1. Third-party trademarks and logos are the property of their respective owners.

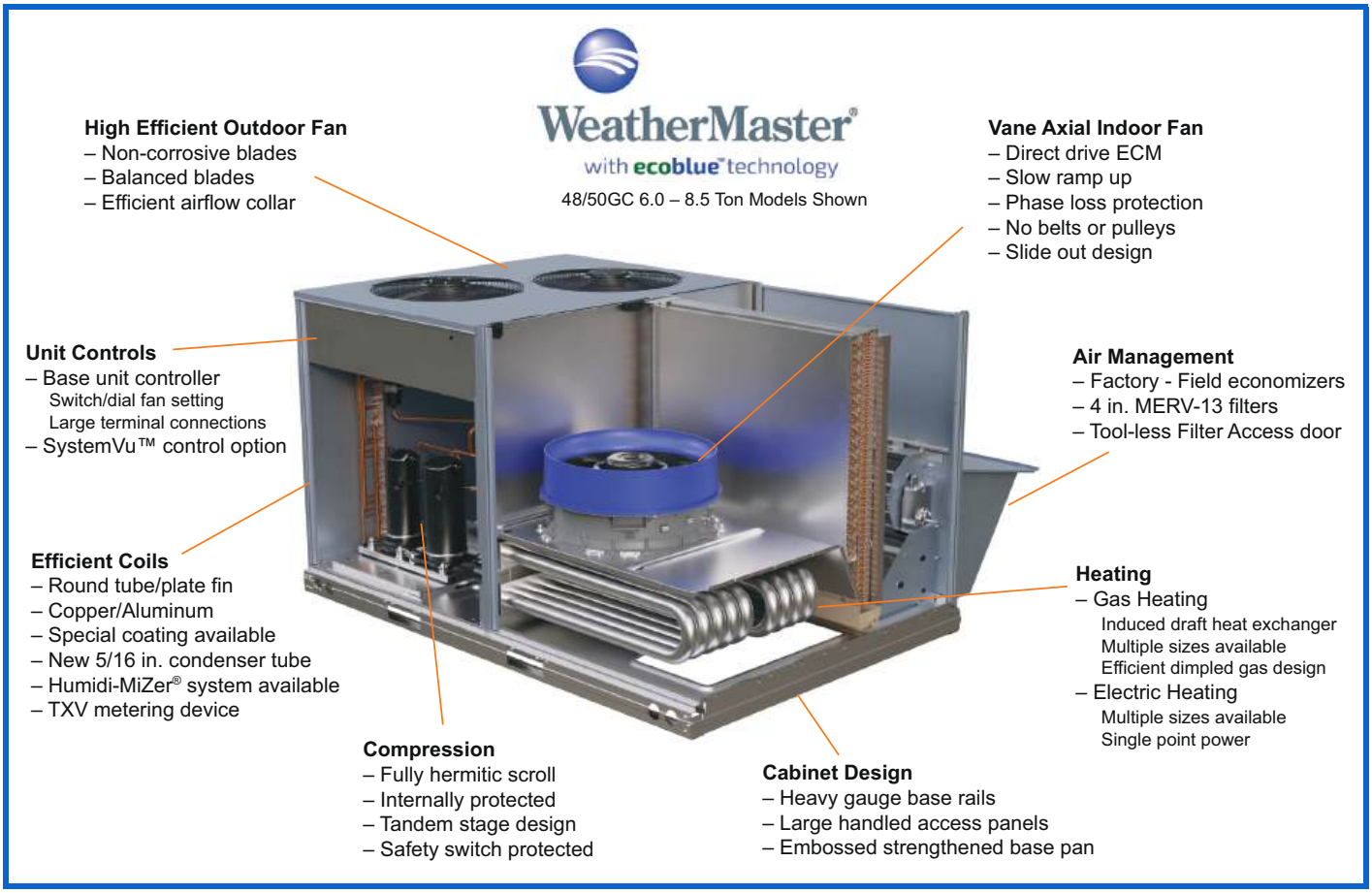

Model number nomenclature

48GC Model Number Nomenclature

Position:	1	2	3	4	5	6	7	8	9	10	11	12	13	14	15	16	17	18
Example:	4	8	G	C	D	M	1	2	A	2	A	6	-	0	A	0	A	0

Unit Heat Type
48 = Gas Heat Packaged Rooftop

Model Series - WeatherMaster®
GC = High Efficiency Packaged RTU
with EcoBlue™ Technology

Gas Heat Options
D = Low Gas Heat
E = Medium Gas Heat
F = High Gas Heat
S = Low Gas Heat, Stainless Steel Exchanger
R = Medium Gas Heat, Stainless Steel Exchanger
T = High Gas Heat, Stainless Steel Exchanger

Refrig. Systems Options
M = Single Circuit, Two Stage Cooling
N = Single Circuit, Two Stage Cooling with Humidi-MiZer® System
P = Single Circuit, Two Stage Cooling with Low Ambient

Cooling Tons
07 = 6.0 Tons
08 = 7.5 Tons
09 = 8.5 Tons
12 = 10.0 Tons
14 = 12.5 Tons

Sensor Options
A = None
B = Return Air Smoke Detector (RA)
C = Supply Air Smoke Detector (SA)
D = RA + SA Smoke Detector
E = CO_2 Sensor
F = RA Smoke Detector and CO_2
G = SA Smoke Detector and CO_2
H = RA + SA Smoke Detector and CO_2
J = Condensate Overflow Switch
K = Condensate Overflow Switch + RA Smoke Detectors
L = Condensate Overflow Switch + RA and SA Smoke Detectors
M = Condensate Overflow Switch + SA Smoke Detector
N = Condensate Overflow Switch + CO_2
P = Condensate Overflow Switch + RA Smoke Detector and CO_2
Q = Condensate Overflow Switch + SA Smoke Detector and CO_2
R = Condensate Overflow Switch + RA and SA Smoke Detector and CO_2

Fan Options
2 = Standard/Medium Static - EcoBlue Vane Axial Fan
3 = High Static - EcoBlue Vane Axial Fan
5 = Standard/Medium Static - EcoBlue Vane Axial Fan and Filter Status Switch
6 = High Static Option - EcoBlue Vane Axial Fan and Filter Status Switch

RTPF Coil Options – (Outdoor – Indoor – Hail Guard)
A = Al/Cu – Al/Cu
B = Precoat Al/Cu – Al/Cu
C = E-coat Al/Cu – Al/Cu
D = E-coat Al/Cu – E-coat Al/Cu
E = Cu/Cu – Al/Cu
F = Cu/Cu – Cu/Cu
M = Al/Cu – Al/Cu – Louvered Hail Guard
N = Precoat Al/Cu – Al/Cu – Louvered Hail Guard
P = E-coat Al/Cu – Al/Cu – Louvered Hail Guard
Q = E-coat Al/Cu – E-coat Al/Cu – Louvered Hail Guard
R = Cu/Cu – Al/Cu – Louvered Hail Guard
S = Cu/Cu – Cu/Cu – Louvered Hail Guard

Voltage
1 = 575/3/60
5 = 208-230/3/60
6 = 460/3/60

Packaging Compliance
0 = Standard
1 = LTL

Electrical Options
A = None
B = HACR Breaker
C = Non-Fused Disconnect (NFDC)
D = Thru-The-Base Connections (TTB)
E = HACR + TTB
F = NFDC + TTB
N = Phase Monitor Protection (PMR)
P = PMR + HACR
Q = PMR + NFDC
R = PMR + TTB
S = PMR + HACR + TTB
T = PMR + NFDC + TTB
1 = HSCCR[a, b] (High Short Circuit Current Rating)
2 = HSCCR[a, b] + TTB

Service Options
0 = None
1 = Unpowered Convenience Outlet (NPCO)
2 = Powered Convenience Outlet (PCO)
3 = Hinged Panels (HP)
4 = Hinged Panels and NPCO
5 = Hinged Panels and PCO
6 = MERV-13 Filters
7 = NPCO + MERV-13 Filters
8 = PCO + MERV-13 Filters
9 = Hinged Panels + MERV-13 Filters
A = HP + NPCO + MERV-13 Filters
B = HP + PCO + MERV-13 Filters
C = Foil Faced Insulation (FF)
D = Foil Faced Insulation + NPCO
E = Foil Faced Insulation + PCO
F = Foil Faced Insulation + Hinged Panels
G = FF + HP + NPCO
H = FF + HP + PCO
J = Foil Faced Insulation + MERV-13 Filters
K = FF + NPCO + MERV-13 Filters
L = FF + PCO + MERV-13 Filters
M = FF + HP + MERV-13 Filters
N = FF + HP + NPCO + MERV-13 Filters
P = FF + HP + PCO + MERV-13 Filters

Intake / Exhaust Options
A = None
B = Standard Leak Temperature Economizer w/ Barometric Relief
F = Standard Leak Enthalpy Economizer w/ Barometric Relief
U = Ultra Low Leak Temperature Economizer w/ Barometric Relief
W= Ultra Low Leak Enthalpy Economizer w/ Barometric Relief

Base Unit Controls
0 = Electromechanical Controls (allows for use of field-installed economizers)
3 = SystemVu™ Controller
8 = Electromechanical Controls with POL224 EconomizerONE (with Fault Detection and Diagnostic)

Design Revision
- = Factory Design Revision

NOTE(S):
[a] HSCCR is not available on the following units: units with Humidi-MiZer, Low Ambient Controls, Phase Loss Monitor, Powered Convinience Outlet, HACR Breaker, Non-Fused Disconnect, and 575V.
[b] HSCCR is not available on size 12 units due to control box constraints.

Model number nomenclature (cont)

50GC Model Number Nomenclature

Position:	1	2	3	4	5	6	7	8	9	10	11	12	13	14	15	16	17	18
Example:	5	0	G	C	-	M	1	2	A	2	A	6	-	0	A	0	A	0

Unit Heat Type
50 = Cooling Unit with Optional Electric Heat

Model Series - WeatherMaster®
GC = High Efficiency Packaged RTU with EcoBlue™ Technology

Electric Heat
- = None
A = Low Electric Heat
B = Medium Electric Heat
C = High Electric Heat

Refrig. Systems Options
M = Single Circuit, Two Stage Cooling
N = Single Circuit, Two Stage Cooling with Humidi-MiZer® System
P = Single Circuit, Two Stage Cooling with Low Ambient

Tonnage
07 = 6.0 Tons
08 = 7.5 Tons
09 = 8.5 Tons
12 = 10.0 Tons
14 = 12.5 Tons

Sensor Options
A = None
B = Return Air Smoke Detector (RA)
C = Supply Air Smoke Detector (SA)
D = RA + SA Smoke Detector
E = CO_2 Sensor
F = RA Smoke Detector and CO_2
G = SA Smoke Detector and CO_2
H = RA + SA Smoke Detector and CO_2
J = Condensate Overflow Switch
K = Condensate Overflow Switch + RA Smoke Detectors
L = Condensate Overflow Switch + RA and SA Smoke Detectors
M = Condensate Overflow Switch + SA Smoke Detector
N = Condensate Overflow Switch + CO_2
P = Condensate Overflow Switch + RA Smoke Detector and CO_2
Q = Condensate Overflow Switch + SA Smoke Detector and CO_2
R = Condensate Overflow Switch + RA and SA Smoke Detector and CO_2

Fan Options
2 = Standard/Medium Static - EcoBlue Vane Axial Fan
3 = High Static - EcoBlue Vane Axial Fan
5 = Standard/Medium Static - EcoBlue Vane Axial Fan and Filter Status Switch
6 = High Static Option - EcoBlue Vane Axial Fan and Filter Status Switch

RTPF Coil Options – (Outdoor – Indoor – Hail Guard)
A = Al/Cu – Al/Cu
B = Precoat Al/Cu – Al/Cu
C = E-coat Al/Cu – Al/Cu
D = E-coat Al/Cu – E-coat Al/Cu
E = Cu/Cu – Al/Cu
F = Cu/Cu – Cu/Cu
M = Al/Cu – Al/Cu – Louvered Hail Guard
N = Precoat Al/Cu – Al/Cu – Louvered Hail Guard
P = E-coat Al/Cu – Al/Cu – Louvered Hail Guard
Q = E-coat Al/Cu – E-coat Al/Cu – Louvered Hail Guard
R = Cu/Cu – Al/Cu – Louvered Hail Guard
S = Cu/Cu – Cu/Cu – Louvered Hail Guard

Voltage
1 = 575/3/60
5 = 208-230/3/60
6 = 460/3/60

Packaging Compliance
0 = Standard
1 = LTL

Electrical Options
A = None
B = HACR Breaker
C = Non-Fused Disconnect (NFDC)
D = Thru-The-Base Connections (TTB)
E = HACR + TTB
F = NFDC + TTB
N = Phase Monitor Protection (PMR)
P = PMR + HACR
Q = PMR + NFDC
R = PMR + TTB
S = PMR + HACR + TTB
T = PMR + NFDC + TTB
1 = HSCCR[a, b] (High Short Circuit Current Rating)
2 = HSCCR[a, b] + TTB

Service Options
0 = None
1 = Unpowered Convenience Outlet (NPCO)
2 = Powered Convenience Outlet (PCO)
3 = Hinged Panels (HP)
4 = Hinged Panels and NPCO
5 = Hinged Panels and PCO
6 = MERV-13 Filters
7 = NPCO + MERV-13 Filters
8 = PCO + MERV-13 Filters
9 = Hinged Panels + MERV-13 Filters
A = HP + NPCO + MERV-13 Filters
B = HP + PCO + MERV-13 Filters
C = Foil Faced Insulation (FF)
D = Foil Faced Insulation + NPCO
E = Foil Faced Insulation + PCO
F = Foil Faced Insulation + Hinged Panels
G = FF + HP + NPCO
H = FF + HP + PCO
J = Foil Faced Insulation + MERV-13 Filters
K = FF + NPCO + MERV-13 Filters
L = FF + PCO + MERV-13 Filters
M = FF + HP + MERV-13 Filters
N = FF + HP + NPCO + MERV-13 Filters
P = FF + HP + PCO + MERV-13 Filters

Intake / Exhaust Options
A = None
B = Standard Leak Temperature Economizer w/ Barometric Relief
F = Standard Leak Enthalpy Economizer w/ Barometric Relief
U = Ultra Low Leak Temperature Economizer w/ Barometric Relief
W = Ultra Low Leak Enthalpy Economizer w/ Barometric Relief

Base Unit Controls
0 = Electromechanical Controls (allows for use of field-installed economizers)
3 = SystemVu™ Controller
8 = Electromechanical Controls with POL224 EconomizerONE (with Fault Detection and Diagnostic)

Design Revision
- = Factory Design Revision

NOTE(S):
[a] HSCCR is not available on the following units: units with Humidi-MiZer, Low Ambient Controls, Phase Loss Monitor, Powered Convinience Outlet, HACR Breaker, Non-Fused Disconnect, and 575V.
[b] HSCCR is not available on size 12 units due to control box constraints.

Capacity ratings

48GC AHRI Ratings[a,b,c,d]

48GC UNIT	COOLING STAGES	NOMINAL CAPACITY (TONS)	NET COOLING CAPACITY (MBH)	TOTAL POWER (kW)	EER	IEER WITH 2-SPEED INDOOR FAN MOTOR	AHRI RATING CFM
48GC*M07	2	6.0	72.0	5.9	12.2	17.5	2400
48GC*M08	2	7.5	90.0	7.5	12.0	17.5	3000
48GC*M09	2	8.5	96.0	8.1	11.8	17.3	3400
48GC*M12	2	10.0	114.0	10.0	11.4	17.2	3250
48GC*M14	2	12.5	146.0	12.2	12.0	16.5	5250

NOTE(S):

a. Rated in accordance with AHRI Standards 340/360.
b. Rating are based on:
Cooling Standard: 80°F (27°C) db, 67°F (19°C) wb indoor air temperature and 95°F (35°C) db outdoor air temperature.
IEER Standard: A measure that expresses cooling part-load EER efficiency for commercial unitary air-conditioning and heat pump equipment on the basis of weighted operation at various load capacities.
c. All 48GC units comply with ASHRAE 90.1-2019 (American Society of Heating, Refrigerating, and Air-Conditioning Engineers) and DOE-2023 (Department of Energy) Energy Standard for minimum IEER requirements.
d. 48GC units comply with US Energy Policy Act (2005). To evaluate code compliance requirements, refer to state and local codes.

LEGEND

AHRI — Air-Conditioning, Heating and Refrigeration Institute
EER — Energy Efficiency Ratio
IEER — Integrated Energy Efficiency Ratio

50GC AHRI Ratings[a,b,c,d]

50GC UNIT	COOLING STAGES	NOMINAL CAPACITY (TONS)	NET COOLING CAPACITY (MBH)	TOTAL POWER (kW)	EER	IEER WITH 2-SPEED INDOOR FAN MOTOR	AHRI RATING CFM
50GC*M07	2	6.0	72.0	5.8	12.4	17.7	2650
50GC*M08	2	7.5	90.0	7.4	12.2	17.7	3400
50GC*M09	2	8.5	96.0	8.0	12.0	17.5	3500
50GC*M12	2	10.0	114.0	9.8	11.6	17.2	3750
50GC*M14	2	12.5	146.0	12.0	12.2	16.7	5250

NOTE(S):

a. Rated in accordance with AHRI Standards 340/360.
b. Rating are based on:
Cooling Standard: 80°F (27°C) db, 67°F (19°C) wb indoor air temperature and 95°F (35°C) db outdoor air temperature.
IEER Standard: A measure that expresses cooling part-load EER efficiency for commercial unitary air-conditioning and heat pump equipment on the basis of weighted operation at various load capacities.
c. All 50GC units comply with ASHRAE 90.1-2019 (American Society of Heating, Refrigerating, and Air-Conditioning Engineers) and DOE-2023 (Department of Energy) Energy Standard for minimum IEER requirements
d. 50GC units comply with US Energy Policy Act (2005). To evaluate code compliance requirements, refer to state and local codes.

LEGEND

AHRI — Air-Conditioning, Heating and Refrigeration Institute
EER — Energy Efficiency Ratio
IEER — Integrated Energy Efficiency Ratio

Capacity ratings (cont)

Sound Ratings Table[a]

48/50GC UNIT	COOLING STAGES	OUTDOOR SOUND (dB) at 60 Hz[b]								
		A-WEIGHTED[c]	63	125	250	500	1000	2000	4000	8000
M07	2	82	90.1	82.6	81.0	79.4	77.0	73.0	70.4	66.7
M08	2	82	90.6	84.3	80.2	79.3	77.1	72.2	67.4	63.7
M09	2	82	88.6	85.0	81.6	79.5	77.4	74.1	71.0	66.3
M12	2	87	85.9	87.9	85.6	84.4	82.8	78.5	74.9	72.5
M14	2	83	89.3	86.0	82.9	80.7	78.5	73.6	69.6	64.5

NOTE(S):

a. Outdoor sound data is measured in accordance with AHRI.
b. Measurements are expressed in terms of sound power. Do not compare these values to sound pressure values because sound pressure depends on specific environmental factors which normally do not match individual applications. Sound power values are independent of the environment and therefore more accurate.
c. A-weighted sound ratings filter out very high and very low frequencies, to better approximate the response of “average” human ear. A-weighted measurements for Carrier units are taken in accordance with AHRI.

LEGEND

dB — Decibel

Capacity ratings (cont)

Minimum-Maximum Airflow Ratings (cfm) — Natural Gas and Propane

UNIT	HEAT LEVEL	COOLING			HEATING[a]	
		MINIMUM 2-SPEED AIRFLOW (LOW SPEED)	MINIMUM 2-SPEED AIRFLOW (HIGH SPEED)	MAXIMUM AIRFLOW CFM	MINIMUM AIRFLOW CFM	MAXIMUM AIRFLOW CFM
48GC07**	LOW	1080	1800	3000	990	3640
	MED				1730	3160
	HIGH				1750	3250
48GC08**	LOW	1350	2250	3750	1730	3800
	MED				2100	3900
	HIGH				2240	4200
48GC09**	LOW	1530	2550	4250	1730	4750
	MED				2100	4560
	HIGH				2240	4800
48GC12**	LOW	1800	3000	5000	2100	5470
	MED				2580	6720
	HIGH				2710	4750
48GC14**	LOW	2475	3750	6250	1880	5630
	MED				2450	9000
	HIGH				3000	9000

NOTE(S):

a. Heating rating values are identical for aluminum heat exchangers and stainless steel heat exchangers.

Minimum-Maximum Airflow Ratings (cfm) — Cooling Units and Accessory Electric Heat

UNIT	COOLING			ELECTRIC HEAT[a]	
	MINIMUM 2-SPEED AIRFLOW (LOW SPEED)	MINIMUM 2-SPEED AIRFLOW (HIGH SPEED)	MAXIMUM AIRFLOW CFM	MINIMUM AIRFLOW CFM	MAXIMUM AIRFLOW CFM
50GC07**	1080	1800	3000	1800	3000
50GC08**	1350	2250	3750	2250	3750
50GC09**	1530	2550	4250	2550	4250
50GC12**	1800	3000	5000	3000	5000
50GC14**	2475	3750	6250	3750	6250

NOTE(S):

a. Electric heat modules and single point kits are available as field-installed accessories for 50GC units.

Capacity ratings (cont)

Heat Rating Table — Natural Gas and Propane

UNIT	GAS HEAT	AL/SS HEAT EXCHANGER		TEMPERATURE RISE (°F)	THERMAL EFFICIENCY (%)
		INPUT/OUTPUT STAGE 1 (MBH)	INPUT/OUTPUT STAGE 2 (MBH)		
48GC**07	LOW	55 / 41	72 / 59.04	15-55	82
	MED	90 / 66	125 / 102.5	30-55	82
	HIGH	115 / 96	150 / 123	35-65	82
48GC**08	LOW	90 / 66	125 / 102.5	25-55	82
	MED	120 / 98	180 / 148	35-65	82
	HIGH	180 / 146	224 / 181	40-75	81
48GC**09	LOW	90 / 66	125 / 102.5	20-55	82
	MED	120 / 98	180 / 148	30-65	82
	HIGH	180 / 146	224 / 181	35-75	81
48GC**12	LOW	120 / 98	180 / 148	25-65	82
	MED	180 / 146	224 / 181	25-65	81
	HIGH	200 / 164	250 / 205	40-70	82
48GC**14	LOW	120 / 98	180 / 148	20-60	81
	MED	180 / 146	224 / 181	15-55	81
	HIGH	192 / 156	240 / 194	20-60	81

LEGEND

MBH — Btuh in thousands

48/50GC 6.0 to 7.5 Ton Physical Data

48/50GC UNIT	48/50GC*M07	48/50GC*N07	48/50GC*M08	48/50GC*N08
NOMINAL TONS	6.0	6.0	7.5	7.5
BASE UNIT OPERATING WT (lb) 48GC/50GC[a]	775/714	775/714	893/830	893/830
REFRIGERATION SYSTEM				
No. Circuits/No. Compressors/Type	1/2/Scroll	1/2/Scroll	1/2/Scroll	1/2/Scroll
Puron® (R-410A) Charge (lb-oz)	13-0	—	15-14	—
Humidi-MiZer® Puron (R-410A) Charge (lb-oz)	—	20-5	—	23-0
Metering Device	TXV	TXV	TXV	TXV
Humidi-MiZer Metering Device	—	TXV	—	TXV
High-Pressure Trip/Reset (psig)	630/505	630/505	630/505	630/505
Low-Pressure Trip/Reset (psig)	54/117	54/117	54/117	54/117
EVAPORATOR COIL				
Material (Tube/Fin)	Cu/Al	Cu/Al	Cu/Al	Cu/Al
Coil Type	3/8 in. RTPF	3/8 in. RTPF	3/8 in. RTPF	3/8 in. RTPF
Rows/FPI	3/15	3/15	4/15	4/15
Total Face Area (ft^2)	8.9	8.9	11.1	11.1
Condensate Drain Connection Size	3/4	3/4	3/4	3/4
CONDENSER COIL				
Material	Cu/Al	Cu/Al	Cu/Al	Cu/Al
Coil Type	5/16 in. RTPF	5/16 in. RTPF	5/16 in. RTPF	5/16 in. RTPF
Rows/FPI	2/18	2/18	2/18	2/18
Total Face Area (ft^2)	20.5	20.5	25.1	25.1
HUMIDI-MIZER COIL				
Material	—	Cu/Al	—	Cu/Al
Coil Type	—	5/16 in. RTPF	—	5/16 in. RTPF
Rows/FPI	—	2/18	—	2/18
Total Face Area (ft^2)	—	6.0	—	8.0
EVAPORATOR FAN AND MOTOR				
Standard/Medium Static				
Motor Qty / Drive Type	1 / Direct	1 / Direct	1 / Direct	1 / Direct
Max Cont bhp	2.4	2.4	2.4	2.4
Range (rpm)	250-2000	250-2000	250-2000	250-2000
Fan Qty/Type	1 / Vane Axial	1 / Vane Axial	1 / Vane Axial	1 / Vane Axial
Fan Diameter (in.)	22	22	22	22
High Static				
Motor Qty / Drive Type	1 / Direct	1 / Direct	1 / Direct	1 / Direct
Max Cont bhp	3	3	3	3
Range (rpm)	250-2200	250-2200	250-2200	250-2200
Fan Qty/Type	1 / Vane Axial	1 / Vane Axial	1 / Vane Axial	1 / Vane Axial
Fan Diameter (in.)	22	22	22	22
CONDENSER FAN AND MOTOR				
Qty / Motor Drive Type	2 / Direct	2 / Direct	2 / Direct	2 / Direct
Motor hp/rpm	1/4 / 1100	1/4 / 160-1100	1/4 / 1100	1/4 / 160-1100
Fan Diameter (in.)	22	22	22	22
FILTERS				
RA Filter Qty / Size (in.)	4 / 16 x 20 x 2	4 / 16 x 20 x 2	4 / 20 x 20 x 2	4 / 20 x 20 x 2
OA Inlet Screen Qty / Size (in.)	1 / 20 x 24 x 1	1 / 20 x 24 x 1	1 / 20 x 24 x 1	1 / 20 x 24 x 1

NOTE(S):

a. Base unit operating weight does not include weight of options.

LEGEND

bhp — brake horsepower
FPI — Fins Per Inch
OA — Outdoor Air
RA — Return Air

Physical data (cont)

48/50GC 8.5 to 10.0 Ton Physical Data

48/50GC UNIT	48/50GC*M09	48/50GC*N09	48/50GC*M12	48/50GC*N12
NOMINAL TONS	8.5	8.5	10.0	10.0
BASE UNIT OPERATING WT (lb) 48GC/50GC[a]	893/830	893/830	1037/971	1037/971
REFRIGERATION SYSTEM				
No. Circuits/No. Compressors/Type	1/2/Scroll	1/2/Scroll	1/2/Scroll	1/2/Scroll
Puron® (R-410A) Charge (lb-oz)	14-10	—	19-8	—
Humidi-MiZer® Puron (R-410A) Charge (lb-oz)	—	21-11	—	28-0
Metering Device	TXV	TXV	TXV	TXV
Humidi-MiZer Metering Device	—	TXV	—	TXV
High-Pressure Trip/Reset (psig)	630/505	630/505	630/505	630/505
Low-Pressure Trip/Reset (psig)	54/117	54/117	54/117	54/117
EVAPORATOR COIL				
Material (Tube/Fin)	Cu/Al	Cu/Al	Cu/Al	Cu/Al
Coil Type	3/8 in. RTPF	3/8 in. RTPF	3/8 in. RTPF	3/8 in. RTPF
Rows/FPI	4/15	4/15	4/15	4/15
Total Face Area (ft^2)	11.1	11.1	11.1	11.1
Condensate Drain Connection Size	3/4	3/4	3/4	3/4
CONDENSER COIL				
Material	Cu/Al	Cu/Al	Cu/Al	Cu/Al
Coil Type	5/16 in. RTPF	5/16 in. RTPF	5/16 in. RTPF	5/16 in. RTPF
Rows/FPI	2/18	2/18	3/18	3/18
Total Face Area (ft^2)	25.1	25.1	25.1	25.1
HUMIDI-MIZER COIL				
Material	—	Cu/Al	—	Cu/Al
Coil Type	—	5/16 in. RTPF	—	5/16 in. RTPF
Rows/FPI	—	2/18	—	2/18
Total Face Area (ft^2)	—	8.0	—	8.0
EVAPORATOR FAN AND MOTOR				
Standard/Medium Static				
Motor Qty / Drive Type	1 / Direct	1 / Direct	1 / Direct	1 / Direct
Max Cont bhp	2.4	2.4	2.4	2.4
Range (rpm)	250-2000	250-2000	250-2000	250-2000
Fan Qty / Type	1 / Vane Axial	1 / Vane Axial	1 / Vane Axial	1 / Vane Axial
Fan Diameter (in.)	22	22	22	22
High Static				
Motor Qty / Drive Type	1 / Direct	1 / Direct	1 / Direct	1 / Direct
Max Cont bhp	3	3	5	5
Range (rpm)	250-2200	250-2200	250-2200	250-2200
Fan Qty / Type	1 / Vane Axial	1 / Vane Axial	1 / Vane Axial	1 / Vane Axial
Fan Diameter (in.)	22	22	22	22
CONDENSER FAN AND MOTOR				
Qty / Motor Drive Type	2 / Direct	2 / Direct	1 / Direct	1 / Direct
Motor hp / rpm	1/4 / 1100	1/4 / 160-1100	1 / 1050/770/450/350/265	1 / 1050/770/450/350/265
Fan Diameter (in.)	22	22	30	30
FILTERS				
RA Filter Qty / Size (in.)	4 / 20 x 20 x 2	4 / 20 x 20 x 2	4 / 20 x 20 x 2	4 / 20 x 20 x 2
OA Inlet Screen Qty / Size (in.)	1 / 20 x 24 x 1	1 / 20 x 24 x 1	1 / 20 x 24 x 1	1 / 20 x 24 x 1

NOTE(S):

a. Base unit operating weight does not include weight of options.

LEGEND

bhp — brake horsepower
FPI — Fins Per Inch
OA — Outdoor Air
RA — Return Air

Physical data (cont)

48/50GC 12.5 Ton Physical Data

48/50GC UNIT	48/50GC*M14	48/50GC*N14
NOMINAL TONS	12.5	12.5
BASE UNIT OPERATING WT (lb) 48GC/50GC[a]	1390/1313	1390/1313
REFRIGERATION SYSTEM		
No. Circuits/No. Compressors/Type	1/2/Scroll	1/2/Scroll
Puron® (R-410A) Charge (lb-oz)	30-0	—
Humidi-MiZer® Puron (R-410A) Charge (lb-oz)	—	38-0
Metering Device	TXV	TXV
Humidi-MiZer Metering Device	—	TXV
High-Pressure Trip/Reset (psig)	630/505	630/505
Low-Pressure Trip/Reset (psig)	54/117	54/117
EVAPORATOR COIL		
Material (Tube/Fin)	Cu/Al	Cu/Al
Coil Type	3/8 in. RTPF	3/8 in RTPF
Rows/FPI	4/15	4/15
Total Face Area (ft^2)	17.5	17.5
Condensate Drain Connection Size	3/4	3/4
CONDENSER COIL		
Material	Cu/Al	Cu/Al
Coil Type	5/16 in RTPF	5/16 in RTPF
Rows/FPI	2/18	2/18
Total Face Area (ft^2)	46.2	46.2
HUMIDI-MIZER COIL		
Material	—	Cu/Al
Coil Type	—	5/16" RTPF
Rows/FPI	—	2/18
Total Face Area (ft^2)	—	8
EVAPORATOR FAN AND MOTOR		
Standard/Medium Static		
Motor Qty / Drive Type	1 / Direct	1 / Direct
Max Cont bhp	3	3
Range (rpm)	250-2200	250-2200
Fan Qty / Type	1 / Vane Axial	1 / Vane Axial
Fan Diameter (in.)	22	22
High Static		
Motor Qty / Drive Type	1 / Direct	1 / Direct
Max Cont bhp	5	5
Range (rpm)	250-2200	250-2200
Fan Qty / Type	1 / Vane Axial	1 / Vane Axial
Fan Diameter (in.)	22	22
CONDENSER FAN AND MOTOR		
Qty / Motor Drive Type	3 / Direct	3 / Direct
Motor hp / rpm	1/4 / 1100	1/4 / 1100
Fan Diameter (in.)	22	22
FILTERS		
RA Filter Qty / Size (in.)	6 / 18 x 24 x 2	6 / 18 x 24 x 2
OA Inlet Screen Qty / Size (in.)	Vertical: 2 / 24 x 27 x 1 Horizontal: 1 / 30 x 39 x1	Vertical: 2 / 24 x 27 x 1 Horizontal: 1 / 30 x 39 x1

NOTE(S):

a. Base unit operating weight does not include weight of options.

LEGEND

bhp — brake horsepower
FPI — Fins Per Inch
OA — Outdoor Air
RA — Return Air

Physical data (cont)

48GC 6.0 to 12.5 Ton Gas Heat Data

48GC UNIT	48GC**07	48GC**08	48GC**09	48GC**12	48GC**14
NOMINAL TONS	6.0	7.5	8.5	10.0	12.5
GAS CONNECTION					
No. of Gas Valves	1	1	1	1	1
Natural Gas Supply Line Pressure (in. wg)/(psig)	4-13 / 0.14-0.47	4-13 / 0.14-0.47	4-13 / 0.14-0.47	4-13 / 0.14-0.47	5-13 / 0.18-0.47
Liquid Propane Supply Line Pressure (in. wg)/(psig)	11-13 / 0.40-0.47	11-13 / 0.40-0.47	11-13 / 0.40-0.47	11-13 / 0.40-0.47	11-13 / 0.40-0.47
HEAT ANTICIPATOR SETTING (AMPS)					
First Stage	0.14	0.14	0.14	0.14	0.14
Second Stage	0.14	0.14	0.14	0.14	0.14
NATURAL GAS HEAT					
LOW					
No. of Stages / No. of Burners (total)	2 / 2	2 / 3	2 / 3	2 / 4	2 / 5
Connection Size	1/2 in. NPT	1/2 in. NPT	1/2 in. NPT	3/4 in. NPT	3/4 in. NPT
Rollout Switch Opens / Closes (°F)	195 / 115	195 / 115	195 / 115	195 / 115	225 / 145
Temperature Rise (°F)	15-55	25-55	20-55	25-65	20-60
MEDIUM					
No. of Stages / No. of Burners (total)	2 / 3	2 / 4	2 / 4	2 / 5	2 / 6
Connection Size	1/2 in. NPT	3/4 in. NPT	3/4 in. NPT	3/4 in. NPT	3/4 in. NPT
Rollout Switch Opens / Closes (°F)	195 / 115	195 / 115	195 / 115	195 / 115	225 / 145
Temperature Rise (°F)	30-55	35-65	30-65	25-65	15-55
HIGH					
No. of Stages / No. of Burners (total)	2 / 4	2 / 5	2 / 5	2 / 5	2 / 8
Connection Size	3/4 in. NPT	3/4 in. NPT	3/4 in. NPT	3/4 in. NPT	3/4 in. NPT
Rollout Switch Opens / Closes (°F)	195 / 115	195 / 115	195 / 115	195 / 115	225 / 145
Temperature Rise (°F)	35-65	40-75	35-75	40-70	20-60
LIQUID PROPANE HEAT					
LOW					
No. of Stages / No. of Burners (total)	2 / 2	2 / 3	2 / 3	2 / 4	2 / 5
Connection Size	1/2 in. NPT	1/2 in. NPT	1/2 in. NPT	3/4 in. NPT	3/4 in. NPT
Rollout Switch Opens / Closes (°F)	195 / 115	195 / 115	195 / 115	195 / 115	225 / 145
Temperature Rise (°F)	15-55	25-55	20-55	25-65	20-60
MEDIUM					
No. of Stages / No. of Burners (total)	2 / 3	2 / 4	2 / 4	2 / 5	2 / 6
Connection Size	1/2 in. NPT	3/4 in. NPT	3/4 in. NPT	3/4 in. NPT	3/4 in. NPT
Rollout Switch Opens / Closes (°F)	195 / 115	195 / 115	195 / 115	195 / 115	225 / 145
Temperature Rise (°F)	30-55	35-65	30-65	25-65	15-55
HIGH					
No. of Stages / No. of Burners (total)	2 / 4	2 / 5	2 / 5	2 / 5	2 / 8
Connection Size	3/4 in. NPT	3/4 in. NPT	3/4 in. NPT	3/4 in. NPT	3/4 in. NPT
Rollout Switch Opens / Closes (°F)	195 / 115	195 / 115	195 / 115	195 / 115	225 / 145
Temperature Rise (°F)	35-65	40-75	35-75	40-70	20-60

Options and accessories

ITEM	FACTORY-INSTALLED OPTION	FIELD-INSTALLED ACCESSORY
GAS HEAT (48GC units only)		
Low, Medium or High Gas Heat — Aluminized Heat Exchanger	X	
Low, Medium or High Gas Heat — Stainless Steel Heat Exchanger	X	
Propane Conversion Kit		X
High Altitude Conversion Kit		X
Flue Discharge Deflector		X
Flue Shield (07-12 sizes only)		X
ELECTRIC HEAT (50GC units only)		
Electric Resistance Heaters	X	X
Single Point Kits		X
CABINET		
Thru-the-Base electrical or gas-line connections	X	X
Hinged Access Panels	X	
MERV-13, 4 in. Filters	X	
MERV-13, 2 in. Filters		X
MERV-8, 2 in. Filters		X
4 in. Filter Rack (filters not included)		X
Disconnect Switch Bracket[a]		X
Supply Duct Cover[a]		X
Foil Faced Insulation (throughout entire cabinet)	X	
COIL OPTIONS		
Cu/Cu indoor and/or outdoor coils	X	
Pre-coated outdoor coils	X	
Premium, E-coated outdoor coils	X	
HUMIDITY CONTROL		
Humidi-MiZer® Adaptive Dehumidification System	X	
CONDENSER PROTECTION		
Condenser coil hail guard (louvered design)	X	X
CONTROLS		
Thermostats, temperature sensors, and subbases		X
SystemVu™ DDC communicating controller	X	
Smoke detector (supply and/or return air)	X	X
Horn Strobe Annunciator[b]		X
Time Guard II compressor delay control circuit		X
Phase Monitor	X	X
Filter Maintenance indicator	X	
Filter Status indicator	X	X
ECONOMIZERS AND OUTDOOR AIR DAMPERS		
EconomizerONE for Electromechanical Controls, complies with FDD (Standard and Ultra Low Leak damper models)[c]	X	X
Wi-Fi Stick for EconomizerONE (optional)		X
EconoMi$er2 for DDC controls (Low and Ultra Low Leak air damper models)[d]	X	X
Motorized Two-Position outdoor-air damper		X
Manual outdoor-air damper (25% and 50%)		X
Barometric relief[e]	X	X
Condensate Overflow switch	X	X

ITEM	FACTORY-INSTALLED OPTION	FIELD-INSTALLED ACCESSORY
ECONOMIZER SENSORS AND IAQ DEVICES		
Single dry bulb temperature sensors[f]	X	X
Differential dry bulb temperature sensors[f]		X
Differential enthalpy sensors[f]		X
CO_2 sensor (wall, duct, or unit mounted)[f]	X	X
INDOOR MOTOR AND DRIVE		
Multiple motor and drive packages	X	
LOW AMBIENT CONTROLS		
Winter start kit[g]		X
Low Ambient controller to 0°F (–18°C)[g]	X	X
POWER OPTIONS		
Convenience outlet (powered)	X	
Convenience outlet (unpowered)	X	
Convenience outlet, 20 amp (unpowered)		X
Non-fused disconnect[h]	X	
HACR Breaker[i]	X	
High SCCR Protection[j]	X	
ROOF CURBS		
Roof curb 14 in. (356 mm)		X
Roof curb 24 in. (610 mm)		X

NOTE(S):

a. For Size 14 units only.
b. Requires a field-supplied 24V transformer for each application. See price pages for details.
c. FDD (Fault Detection and Diagnostic) capability per California Title 24 section 120.2.
d. Models with SystemVu controls comply with California Title 24 Fault Detection and Diagnostic (FDD).
e. Included with economizer.
f. Sensors used to optimize economizer performance.
g. See application data for assistance.
h. Non-fused disconnect switch cannot be used when unit FLA electrical rating exceeds –
   Sizes 07-12: 80 amps, all voltages.
   Size 14: 208/230/3/60 = 100 amps, 460/3/60 = 90 amps, 575/3/60 = 70 amps.
   Carrier RTU Builder automatically selects the amp limitations.
i. HACR circuit breaker cannot be used when unit MOCP electrical rating exceeds –
   Sizes 07-12: 208/230/3/60 = 100 amps, 460/3/60 = 90 amps, 575/3/60 = 70 amps.
   Size 14: 208/230/3/60 = 200 amps, 460/3/60 = 90 amps, 575/3/60 = 80 amps.
   Carrier RTU Builder automatically selects the amp limitations.
   HACR circuit breaker on 575 volt can only be used on Wye power supply. Delta power supply is prohibited.
j. High SCCR (Short Circuit Current Rating) is not available on the following: units with Humidi-MiZer system, Low Ambient controls, Phase loss monitor, HACR breaker, Non-fused disconnect, and 575V.

Factory-installed options

Economizer (dry-bulb or enthalpy)

Economizers save money. They bring in fresh, outside air for ventilation; and — when conditions are right — 100% outside air to cool your building. This is the preferred method of low-ambient cooling. When coupled to CO_2 sensors, economizers can provide even more savings by bringing in the exact amount of outside air required for the current occupancy state of your space.

Economizers are available as a factory or field installed option and with either enthalpy or dry-bulb temperature inputs. Additional sensors are available as accessories to customize your economizer control method.

Unit mounted CO_2 sensor

The CO_2 sensor works with the economizer to intake only the correct amount of outside air for ventilation. As occupants fill your building, the CO_2 sensor detects their presence through increasing CO_2 levels, and opens the economizer appropriately. When the occupants leave, the CO_2 levels decrease, and the sensor appropriately closes the economizer. This intelligent control of the ventilation air, called demand controlled ventilation (DCV), reduces the overall load on the rooftop, saving money. It is also available as a field-installed accessory.

Smoke detector (supply and/or return air)

Trust the experts. Smoke detectors make your application safer and your job easier. Carrier smoke detectors immediately shut down the rooftop unit when smoke is detected. They are available as factory or field installed options in the supply airstream, return airstream, or both.

Electric heaters

Carrier offers a full-line of factory and field-installed accessory heaters. The heaters are pre-engineered and certified, easy to install, and easy to use.

Optional Humidi-MiZer® adaptive dehumidification system

Carrier's Humidi-MiZer adaptive dehumidification system is an all-inclusive factory-installed option that can be ordered with any WeatherMaster 48/50GC**07-14 rooftop unit.

This system expands the envelope of operation of Carrier's WeatherMaster rooftop products to provide unprecedented flexibility to meet year-round comfort conditions.

A WeatherMaster 48/50GC**07-14 rooftop with a Humidi-MiZer system can operate in normal cooling mode, sub-cooling mode, and hot gas reheat mode. Normal cooling mode is used when there is a call for cooling, but the space does not need additional dehumidification. The unit will follow its normal sequence of operation and stage compressors to maintain comfort conditions.

Sub-cooling mode will operate to satisfy part load type conditions when the space requires combined sensible and additional latent load control. The unit will "subcool" the evaporator to remove additional moisture from the airstream.

Hot Gas Reheat mode will operate when outdoor temperatures diminish and the need for latent capacity is required for humidity control. Hot Gas Reheat mode will provide neutral air for maximum dehumidification operation.

NOTE: Humidi-MiZer system includes Low Ambient controller.

Low ambient controller

The low ambient controller is a head pressure controller that is designed to maintain the unit's condenser head pressure during periods of low ambient cooling operation. This device should be used as an alternative to economizer free cooling when economizer usage is either not appropriate or desired. The low ambient controller will either cycle the outdoor fan motors or operate them at reduced speed to maintain the unit operation, depending on the model. This controller allows cooling operation down to 0°F (–18°C) ambient conditions.

The low ambient controller is available as a factory or field installed option.

NOTE: 0°F (–18°C) is standard on size 12 models.

Factory installed low ambient option includes winter start kit, allowing for operation down to –20°F. Field installed low ambient kit requires additional winter start kit for operation down to –20°F.

Thru-the-base connections

Thru-the-base connections, available as a factory option, are necessary to ensure proper connection and seal when routing wire and piping through the rooftop's basepan and curb. These couplings eliminate roof penetration and should be considered for gas lines, main power lines, and control power.

Hinged access panels

Allows access to unit's major components with specifically designed hinged access panels. Panels are filter, control box access, indoor fan motor access.

Cu/Cu coils

Copper fins and copper tubes are mechanically bonded to copper tube sheets. A polymer strip prevents coil assembly from contacting additional sheet metal to minimize the potential for galvanic corrosion.

E-coated coils

A flexible epoxy polymer coating uniformly applied to all coil surface areas without material bridging between fins. Coating process ensures complete coil encapsulation of tubes, fins and headers.

Pre-coated outdoor coils

A durable epoxy-phenolic coating to provide protection in mildly corrosive coastal environments. The coating minimizes galvanic action between dissimilar metals. Coating is applied to the aluminum fin stock prior to the fin stamping process to create an inert barrier between the aluminum fin and copper tube.

Condenser coil hail guard

Sleek, louvered panels protect the condenser coil from hail damage, foreign objects, and incidental contact.

Stainless steel heat exchanger (48GC units only)

The stainless steel heat exchanger option provides the tubular heat exchanger be made out of a minimum 20 gauge type 409 stainless steel for applications where the mixed air to the heat exchanger is expected to drop below 45°F (7°C). Stainless steel may be specified on applications where the presence of airborne contaminants require its use (applications such as paper mills) or in area with very high outdoor humidity that may result in severe condensation in the heat exchanger during cooling operation.

Convenience outlet (powered or un-powered)

Reduce service and/or installation costs by including a convenience outlet in your specification. Carrier will install this service feature at our factory. Provides a convenient, 15 amp, 115v GFCI receptacle. The "powered" option includes a transformer and allows the installer to power the outlet from the line side of the disconnect or load side as required by code. The "unpowered" option is to be powered from a separate 115/120v power source.

The unpowered convenience outlet is available as a 15 amp factory-installed option or a 20 amp field-installed accessory.

Non-fused disconnect

This OSHA-compliant, factory-installed, safety switch allows a service technician to locally secure power to the rooftop. Please note factory-installed non-fused disconnects are sized for the unit as ordered from the factory. The sizing of these do not accommodate field-installed items such as power exhaust devices, etc. If field installing electric heat with factory-installed non-fused disconnect switch, a single point kit may or may not be required.

SystemVu™ controller

Carrier's SystemVu controller is an optional factory-installed and tested controller.

This controller takes on a whole new approach to provide an intuitive, intelligent controller that not only monitors and controls the unit, but also provides linkage to multiple building automation systems.

Each SystemVu controller makes it easy to set up, service, troubleshoot, gain historical data, generate reports and provide comfort on your job site.

Key features include:

- Easy to read back lit four line text screen for superior visibility.
- Quick operational condition LEDs of: Run, Alert, and Fault.
- Simple navigation with large keypad buttons of: Navigation arrows, Test, Back, Enter and Menu.
- Capable of being controlled with a conventional thermostat, space sensor or build automation system.
- Service capabilities include:
  - Auto run test
  - Manual run test
  - Component run hours and starts
  - Commissioning reports
  - Data logging
- Full range of diagnosis:
  - Read refrigerant pressures without the need of gauges
  - Sensor faults
  - Compressor reverse rotation
  - Economizer diagnostics that meet California Title 24 requirements
- Quick data transfer via USB port:
  - Unit configuration uploading/downloading
  - Data logging
  - Software upgrades
- Built in capacity for:
  - i-Vu® open systems
  - BACnet systems
  - CCN systems
- Configuration and alarm point capability:
  - Contain over 100 alarm codes
  - Contain over 260 status, troubleshooting, diagnostic and maintenance points
  - Contain over 270 control configuration setpoints

Condensate overflow switch

This sensor and related controller monitors the condensate level in the drain pan and shuts down compressor operation when overflow conditions occur.

It includes:

- Indicator light — solid red (more than 10 seconds on water contact — compressors disabled), blinking red (sensor disconnected)
- 10-second delay to break — eliminates nuisance trips from splashing or waves in pan (sensor needs 10 seconds of constant water contact before tripping)
- Disables the compressors operation when condensate plug is detected, but still allows fans to run for economizer.

MERV-13 4 in. return air filters

This factory option upgrades the return air filters from standard 2 in. filters to high efficiency 4 in. non-woven MERV-13 filter media with high strength, moisture-resistant frame. Filter media is securely fastened inside the filter frame on all four sides.

High Short Circuit Current Rating (SCCR) protection

This factory-installed option provides a high short circuit current rating of 10kA. This is an upgrade to the standard unit rating of 5kA and is often used to meet code requirements. The upgraded short circuit current rating offers protection to internal components against high potential fault current situations.

This option is not available with factory installed Non-Fused Disconnect, Humidi-MiZer system, Low Ambient controls, Phase loss monitor/protection or on 575 Volt models.

HACR breaker

These manual reset devices provide overload and short circuit protection for the unit. HACR breakers are factory wired and mounted with an access cover to help provide environmental protection. On 575V applications, HACR breaker can only be used with WYE power distribution systems. Use on Delta power distribution systems is prohibited.

Foil-faced insulated cabinet

Indoor air section of the cabinet is fully insulated with non-fibrous, foil-faced cleanable insulation. This allows for a wipe down surface on installations looking for upgraded insulation options.

Phase monitor protection

The Phase Monitor Control will monitor the sequence of three phase electrical system to provide phase reversal protection; and monitor the three phase voltage inputs to provide phase loss protection for the three-phase device. It will work on either a Delta or Wye power connection.

The phase monitor controller is available as a factory or field installed option.

Filter maintenance indicator

When the optional factory-installed filter maintenance indicator is used, a factory-installed differential pressure switch measures pressure drop across the outside air filter and activates a field-supplied dry contact indicator when the pressure differential exceeds the adjustable switch setpoint.

Filter status indicator

Monitors static pressure across supply and exhaust filters and provides indication when filters become clogged.

Field-installed accessories

Condenser coil hail guard

Sleek, louvered panels protect the condenser coil from hail damage, foreign objects, and incidental contact. This can be purchased as a factory-installed option or as a field-installed accessory.

Differential enthalpy sensor

The differential enthalpy accessory is comprised of an outdoor and return air enthalpy sensors to provide differential enthalpy control. The sensor allows the unit to determine if outside air is suitable for free cooling.

Wall or duct mounted CO_2 sensor

The CO_2 sensor shall be available in duct or wall mount. This sensor provides demand controlled ventilation for indoor air quality (IAQ) control.

Propane conversion kit (48GC units only)

Convert your gas heat rooftop from standard natural gas operation to Propane using this field-installed kit. Please consult price pages to size and select the appropriate kit.

High altitude conversion kit (48GC units only)

High altitudes have less oxygen, which affects the fuel/air mixture in heat exchangers. In order to maintain a proper fuel/air mixture, heat exchangers operating in altitudes above 2000 ft (610 m) require different orifices. To select the correct burner orifices or determine the heat capacity for a high altitude application, use either the selection software, or the unit's service manual. The new gas orifices in this field-installed kit make the necessary adjustment for high altitude applications. They restore the optimal fuel to air mixture and maintain healthy combustion on altitudes above 2000 ft (610 m).

NOTE: Typical natural gas heating value ranges from 975 to 1050 Btu/ft^3 at sea level nationally. The heating value goes down approximately 1.7% per every thousand feet elevation. Standard factory orifices can typically be used up to 2000 ft (610 m) elevation without any operational issues.

Flue discharge deflector (48GC units only)

The flue discharge deflector is a useful accessory when flue gas recirculation is a concern. By venting the flue discharge upwards, the deflector minimizes the chance for a neighboring unit to intake the flue exhaust.

4 in. filter rack kit

The 4 in. filter rack accessory kit is designed to hold 4 in. MERV-8 or MERV-13 filters. Filters are not included in the kit.

MERV-13 2 in. return air filters

This kit includes the correct size and quantity 2 in. MERV-13 filters to accommodate the factory installed filter rack. This kit is not compatible with 4 in. filter rack upgrades.

MERV-8 2 in. return air filters

This kit includes the correct size and quantity 2 in. MERV-8 filters to accommodate the factory installed filter rack. This kit is not compatible with 4 in. filter rack upgrades.

Phase monitor protection

See "Phase monitor protection" on page 16 for details.

Winter start kit

The winter start kit by Carrier extends the low ambient limit of your rooftop to 25°F (–4°C). The kit bypasses the low-pressure switch, preventing nuisance tripping of the low-pressure switch. Other low ambient precautions may still be prudent.

Low ambient controller

See "Low ambient controller" on page 15 for details.

Roof curb (14 in./356 mm or 24 in./610 mm)

Full perimeter roof curb allows for mounting of duct work and RTU on the roof. Roof curbs are offered in 14 in. and 24 in. sizes.

Filter status indicator accessory

See "Filter status indicator" on page 17 for details.

Power exhaust with barometric relief

This field-installed accessory allows for improved internal building pressure control and may eliminate the need for costly, external pressure control fans. Power exhaust modules require a factory or field installed economizer.

Manual OA damper

Manual outdoor air dampers are an economical way to bring in ventilation air. The dampers are available in 25% and 50% versions.

NOTE: See application tip "ROOFTOP-18-01" prior to use of this damper on 07-14 size models.

Motorized two-position damper

The Carrier two-position motorized outdoor air damper admits up to 100% outside air. Using reliable, gear-driven technology, the 2 position damper opens to allow ventilation air when the fan is on and closes when the fan stops, preventing unwanted infiltration.

NOTE: See application tip "ROOFTOP-18-01" prior to use of this damper on 07-14 size models.

Time Guard II control circuit

This accessory protects your compressor by preventing short-cycling. After a start, the time guard prevents the compressor from restarting for 30 seconds after stopping. Not required with SystemVu™ controller or authorized commercial thermostats.

Disconnect switch bracket

Provides a pre-engineered and sized mounting bracket for applications requiring a unit mounted fused and non-fused disconnect of greater than 100 amps. Bracket assures that no damage will occur to coils when mounting with screws and other fasteners (14 size only).

Wi-Fi Stick for EconomizerONE (optional)

The accessory Wi-Fi/WLAN stick can be connected to the EconomizerONE POL224 economizer controller via the USB host interface. The Wi-Fi stick enables a wireless connection to be made between a smartphone and the economizer controller via the Climatix™[1] mobile app for commissioning, troubleshooting, and maintenance operations. The Wi-Fi stick is required to utilize the mobile app.

1. Third-party trademarks and logos are the property of their respective owners.

Climatix™ mobile application

The Climatix™ mobile app offers a best-in-class user interface and a simple step-by-step commissioning workflow using a mobile device. The user interface walks users through the setup of the controller and allows users to view the operating mode and parameters. Users can adjust setpoints, initiate damper tests, and save the final configuration as a favorite to expedite setup in the future.

The application is available on Android™[1] and Apple iOS®[1] platforms. The Wi-Fi stick for the EconomizerONE is required to join the Siemens-WiFi-Stick network and setup the controller on a smartphone.

Options and Accessory Weights[a]

OPTION / ACCESSORY NAME	48/50GC UNIT WEIGHT									
	07		08		09		12		14	
	lb	kg	lb	kg	lb	kg	lb	kg	lb	kg
Humidi-MiZer® System[b]	25	12	34	16	34	16	34	16	55	25
Power Exhaust — Vertical	75	34	75	34	75	34	75	34	85	39
Power Exhaust — Horizontal	30	14	30	14	30	14	30	14	75	34
EconomizerONE and EconoMi$er® 2	75	34	75	34	75	34	75	34	135	62
Two-Position Damper	58	26	58	26	58	26	58	26	65	29
Manual Damper	18	8	18	8	18	8	18	8	25	11
High Gas Heat[c]	81	37	81	37	86	39	86	39	117	53
High Static Motor[d]	30	14	30	14	30	14	30	14	3	2
Hail Guard (louvered)	17	8	17	8	17	8	17	8	44	20
Cu/Cu Condenser Coil	85	39	85	39	100	46	150	68	180	82
Cu/Cu Evaporator Coil	50	23	100	46	100	46	100	46	120	55
Roof Curb (14 in. curb)	143	65	143	65	143	65	143	65	180	82
Roof Curb (24 in. curb)	245	112	245	112	245	112	245	112	255	116
CO_2 Sensor	2	1	2	1	2	1	2	1	2	1
Flue Discharge Deflector[c]	7	3	7	3	7	3	7	3	7	3
Low Ambient Controller	9	4	9	4	9	4	9	4	9	4
Winter Start Kit	5	2	5	2	5	2	5	2	5	2
Return Air Smoke Detector	7	3	7	3	7	3	7	3	7	3
Supply Air Smoke Detector	7	3	7	3	7	3	7	3	7	3
Fan Filter Switch	2	1	2	1	2	1	2	1	2	1
Non-Fused Disconnect	15	7	15	7	15	7	15	7	15	7
Powered Convenience Outlet[e]	36	16	36	16	36	16	36	16	36	16
Unpowered Convenience Outlet	4	2	4	2	4	2	4	2	4	2
Enthalpy Sensor	2	1	2	1	2	1	2	1	2	1
Differential Enthalpy Sensor	3	1	3	1	3	1	3	1	3	1
4 in. MERV 13 Filters	11	5	14	7	14	7	14	7	20	9

NOTE(S):

a. Where multiple variations are available, the heaviest combination is listed.
b. For Humidi-MiZer system, add Low Ambient controller weight.
c. 48GC units only.
d. Add the High Static Motor weight to the weight of the base unit.
e. Powered Convenience Outlet includes weight of convenience outlet transformer.

48GC**07-09 Base Unit Dimensions

NOTES:

1. DIMENSIONS ARE IN INCHES, DIMENSIONS IN [ ] ARE IN MILLIMETERS.
2. CENTER OF GRAVITY
3. DIRECTION OF AIR FLOW
4. ALL VIEW DRAWN USING 3RD ANGLE

UNIT	OUTDOOR COIL TYPE	J	K	H
48GC-M07	RTPF	41 1/4 [1048]	33 3/4 [857]	15 7/8 [403]
48GC-M08	RTPF	49 3/8 [1253]	36 3/8 [925]	15 7/8 [403]
48GC-M09	RTPF	49 3/8 [1253]	36 3/8 [925]	15 7/8 [403]
RTPF - ROUND TUBE, PLATE FIN (COPPER/ALUM)				

Carrier

THIS DOCUMENT IS THE PROPERTY OF CARRIER CORPORATION AND IS DELIVERED UPON THE EXPRESS CONDITION THAT THE CONTENTS WILL NOT BE DISCLOSED OR USED WITHOUT CARRIER CORPORATION'S WRITTEN CONSENT.

SUBMISSION OF THESE DRAWINGS OR DOCUMENTS DOES NOT CONSTITUTE PART PERFORMANCE OR ACCEPTANCE OF CONTRACT.

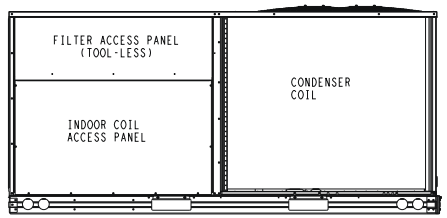

BACK

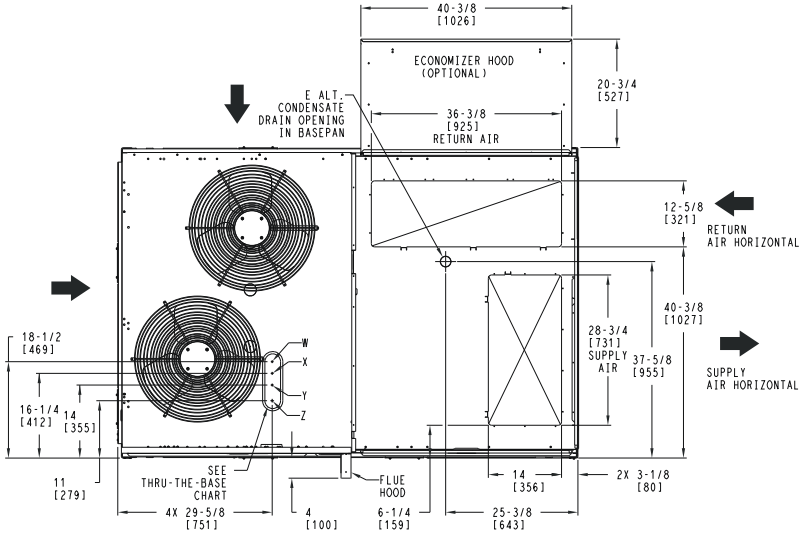

TOP

	CONNECTION SIZES
A	1 3/8" [35] DIA FIELD POWER SUPPLY HOLE
B	2 1/2" [64] DIA POWER SUPPLY KNOCKOUT
C	1 3/4" [51] DIA GAUGE ACCESS PLUG
D	7/8" [22] DIA FIELD CONTROL WIRING HOLE
E	3/4"-14 NPT CONDENSATE DRAIN
F	1/2"-14 NPT GAS CONNECTION 3/4"-14 NPT GAS CONNECTION
G	2" [51] DIA POWER SUPPLY KNOCK-OUT

THRU-THE-BASE CHART (FIELD INST)

THESE HOLES REQUIRED FOR USE WITH ACCY KITS:
CRBTMPWR002A01: GAS THRU CURB
CRBTMPWR004A01: GAS THRU BASEPAN

	THREADED CONDUIT SIZE	WIRE USE	REQ'D HOLE SIZES (MAX.)
W	1/2"	ACC.	7/8" [22.2]
X	1/2"	24V	7/8" [22.2]
Y	1 1/4" (002,004)	POWER	1 3/4" [44.4]
Z *	(004) 3/4" FPT	GAS	1 3/4" [44.4]
*	(002) PROVIDES 3/4" FPT THRU CURB FLANGE & FITTING. HOLE SIZE: 2" [50.8]		

THRU-THE-BASE CHART (FIOP)

FOR "THRU-THE-BASEPAN" FACTORY OPTION, FITTINGS FOR ONLY X, Y, & Z ARE PROVIDED. **

**	FOR BELOW LISTED MODELS, A FIELD SUPPLIED 1/2" ADAPTER IS REQUIRED BETWEEN BASE PAN FITTING AND GAS VALVE: 48GCD,S*07,08

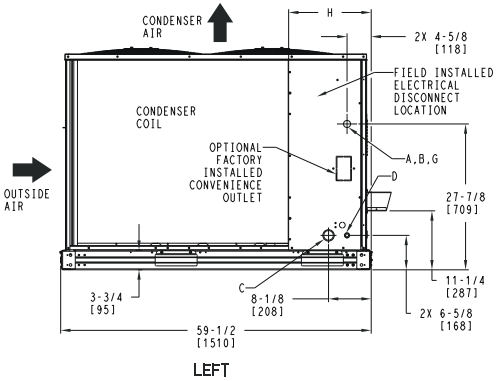

LEFT

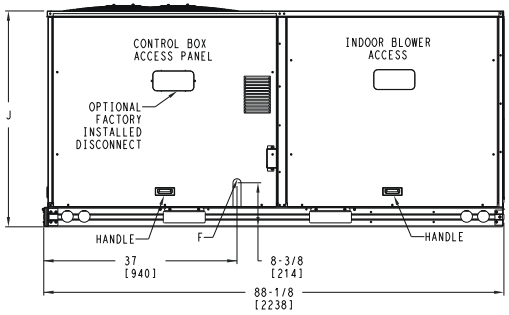

FRONT

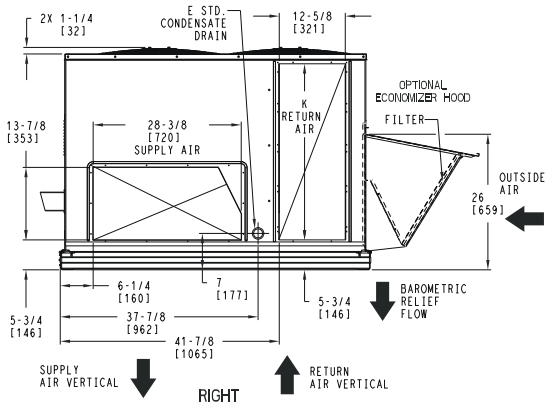

RIGHT

ITC CLASSIFICATION	SHEET	DATE	SUPERCEDES			REV
U.S. ECCN:NSR	1 OF 3	3/21/23	-	48GC 07-09 SINGLE ZONE ELECTRICAL COOLING WITH GAS HEAT	48TM009112	-

48GC**07-09 Base Unit Dimensions (cont)

Carrier
THIS DOCUMENT IS THE PROPERTY OF CARRIER CORPORATION AND IS DELIVERED UPON THE EXPRESS CONDITION THAT THE CONTENTS WILL NOT BE DISCLOSED OR USED WITHOUT CARRIER CORPORATION'S WRITTEN CONSENT.
SUBMISSION OF THESE DRAWINGS OR DOCUMENTS DOES NOT CONSTITUTE PART PERFORMANCE OR ACCEPTANCE OF CONTRACT.

UNIT	OUTDOOR COIL TYPE	STD. UNIT WEIGHT ***		CORNER WEIGHT (A)		CORNER WEIGHT (B)		CORNER WEIGHT (C)		CORNER WEIGHT (D)		C.G.		
		LBS.	KG.	LBS.	KG.	LBS.	KG.	LBS.	KG.	LBS.	KG.	X	Y	Z
48GC-M07	RTPF	775	352	187	85	159	72	198	90	232	105	40 1/2 [1029]	33 [838]	19 7/8 [505]
48GC-M08	RTPF	893	405	186	84	171	78	257	117	279	127	42 1/4 [1073]	23 3/4 [603]	18 5/8 [473]
48GC-M09	RTPF	893	405	203	92	169	76	237	107	285	129	40 [1016]	34 3/4 [883]	18 5/8 [473]
RTPF - ROUND TUBE, PLATE FIN (COPPER/ALUM)														

*** STANDARD UNIT WEIGHT IS WITH LOW GAS HEAT AND WITHOUT PACKAGING.
FOR OTHER OPTIONS AND ACCESSORIES, REFER TO THE PRODUCT DATA CATALOG.

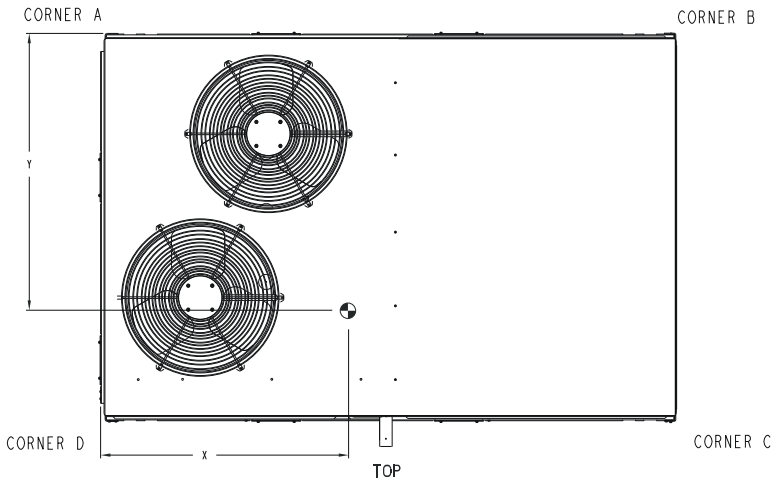

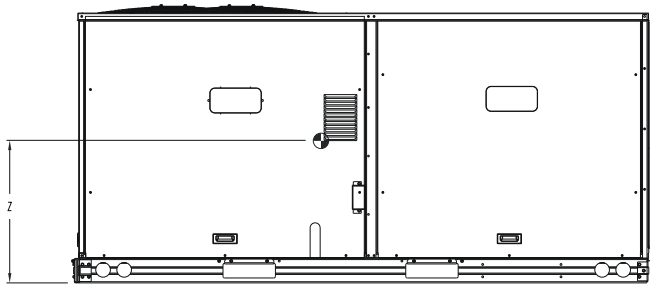

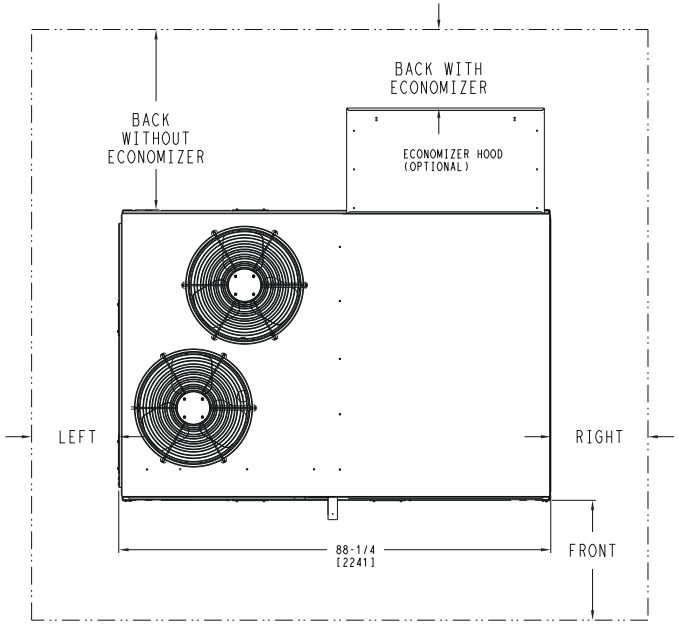

NOTE:

1. FOR ALL MINIMUM CLEARANCES LOCAL CODES OR JURISDICTIONS MAY PREVAIL.

CLEARANCE			
	SERVICE WITH:	SERVICE WITH:	OPERATING
SURFACE	CONDUCTIVE BARRIER	NONCONDUCTIVE BARRIER	CLEARANCE
FRONT	48 [1219mm]	36 [914mm]	18 [457mm]
LEFT	48 [1219mm]	42 [1067mm]	18 [457mm]
BACK W/O ECON	48 [1219mm]	42 [1067mm]	18 [457mm]
BACK W/ECON	36 [914mm]	36 [914mm]	18 [457mm]
RIGHT	36 [914mm]	36 [914mm]	18 [457mm]
TOP	72 [1829mm]	72 [1829mm]	72 [1829mm]

ITC CLASSIFICATION	SHEET	DATE	SUPERCEDES			REV
U.S. ECCN:NSR	2 OF 3	3/21/23	-	48GC 07-09 SINGLE ZONE ELECTRICAL COOLING WITH GAS HEAT	48TM009112	-

48GC**07-09 Base Unit Dimensions (cont)

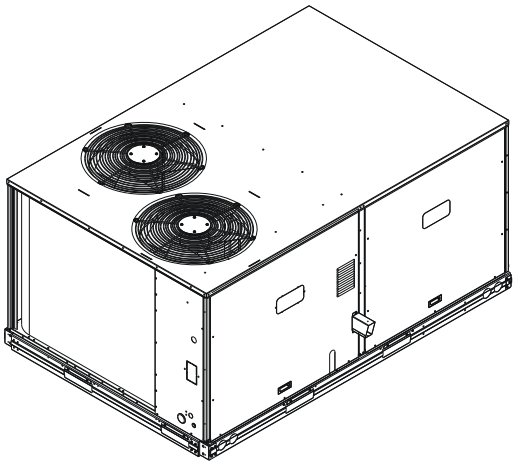

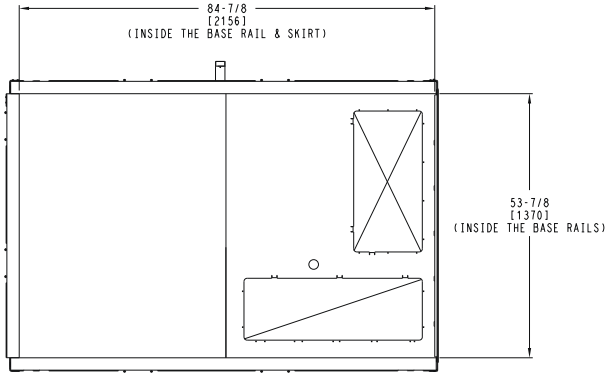

INSIDE BASERAIL DIMENSIONS

BOTTOM

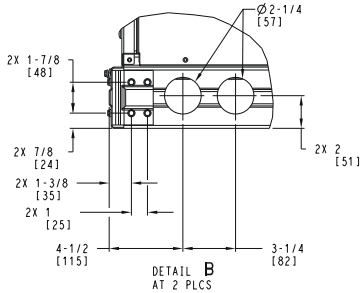

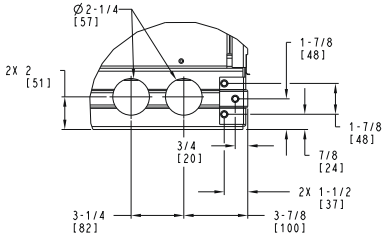

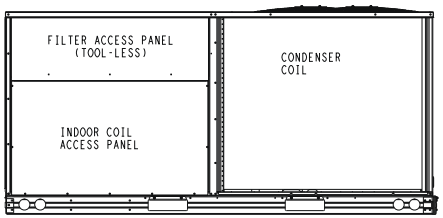

BACK

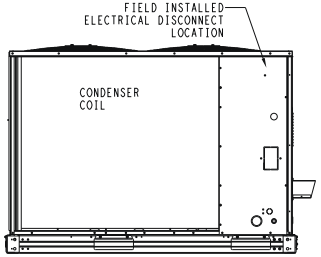

LEFT

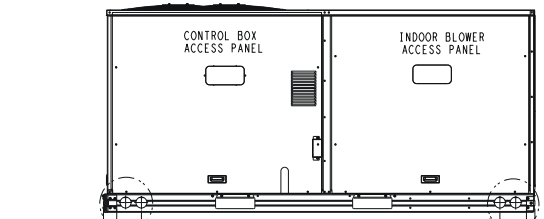

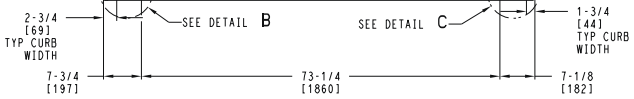

FRONT

ITC CLASSIFICATION	SHEET	DATE	SUPERCEDES			REV
U.S. ECCN: NSR	3 OF 3	3/21/23	-	48GC 07-09 SINGLE ZONE ELECTRICAL COOLING WITH GAS HEAT	48TM009112	-

THIS DOCUMENT IS THE PROPERTY OF CARRIER CORPORATION AND IS DELIVERED UPON THE EXPRESS CONDITION THAT THE CONTENTS WILL NOT BE DISCLOSED OR USED WITHOUT CARRIER CORPORATION'S WRITTEN CONSENT.

SUBMISSION OF THESE DRAWINGS OR DOCUMENTS DOES NOT CONSTITUTE PART PERFORMANCE OR ACCEPTANCE OF CONTRACT.

48GC**12 Base Unit Dimensions

NOTES:

1. DIMENSIONS ARE IN INCHES, DIMENSIONS IN [ ] ARE IN MILLIMETERS.
2. CENTER OF GRAVITY
3. DIRECTION OF AIR FLOW
4. ALL VIEW DRAWN USING 3RD ANGLE

UNIT	OUTDOOR COIL TYPE	H
48GC-M14	RTPF	15 7/8 [403]
RTPF - ROUND TUBE, PLATE FIN (COPPER/ALUM)		

Carrier

THIS DOCUMENT IS THE PROPERTY OF CARRIER CORPORATION AND IS DELIVERED UPON THE EXPRESS CONDITION THAT THE CONTENTS WILL NOT BE DISCLOSED OR USED WITHOUT CARRIER CORPORATION'S WRITTEN CONSENT.

SUBMISSION OF THESE DRAWINGS OR DOCUMENTS DOES NOT CONSTITUTE PART PERFORMANCE OR ACCEPTANCE OF CONTRACT.

	CONNECTION SIZES
A	1 3/8" [35] DIA FIELD POWER SUPPLY HOLE
B	2 1/2" [64] DIA POWER SUPPLY KNOCKOUT
C	1 3/4" [51] DIA GAUGE ACCESS PLUG
D	7/8" [22] DIA FIELD CONTROL WIRING HOLE
E	3/4"-14 NPT CONDENSATE DRAIN
F	3/4"-14 NPT GAS CONNECTION
G	2" [51] DIA POWER SUPPLY KNOCK-OUT

THRU-THE-BASE CHART
THESE HOLES REQUIRED FOR USE
CRBTMPWR002A01,004A01

	THREADED CONDUIT SIZE	WIRE USE	REQ'D HOLE SIZES (MAX.)
W	1/2"	ACC.	7/8" [22.2]
X	1/2"	24V	7/8" [22.2]
Y	1 1/4" (002,004)	POWER	1 3/4" [44.4]
Z*	(004) 3/4" FPT	GAS	1 5/8" [41.3]
	FOR "THRU-THE-BASEPAN" FACTORY OPTION, FITTINGS FOR ONLY X, Y, & Z ARE PROVIDED		
*	(002) PROVIDES 3/4" FPT THRU CURB FLANGE & FITTING.		

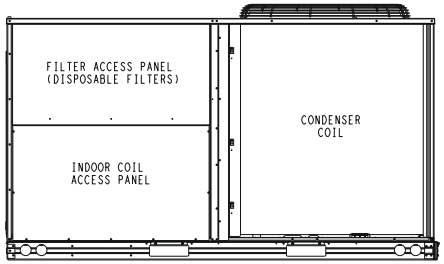

BACK

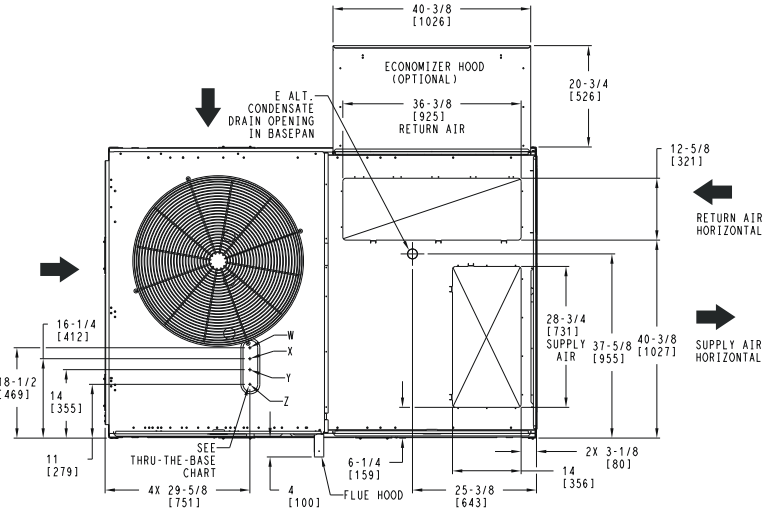

TOP

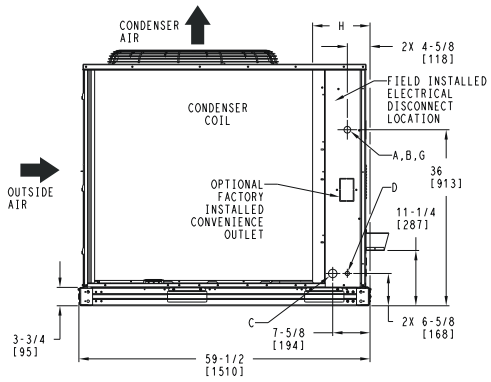

LEFT

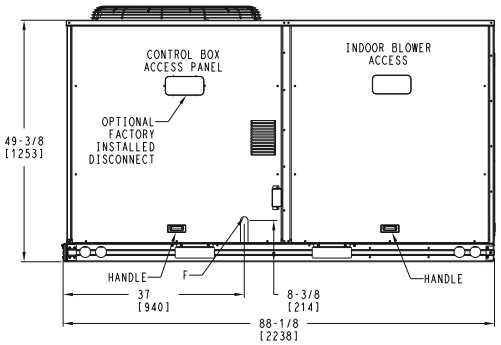

FRONT

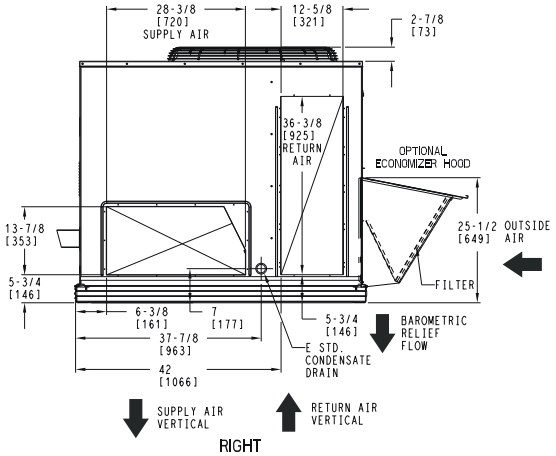

RIGHT

ITC CLASSIFICATION	SHEET	DATE	SUPERCEDES			REV
U.S. ECCN:NSR	1 OF 3	11/15/22	-	48GC-12 SINGLE ZONE ELECTRICAL COOLING WITH GAS HEAT	48TM009113	-

Carrier

48GC**12 Base Unit Dimensions (cont)

Carrier | THIS DOCUMENT IS THE PROPERTY OF CARRIER CORPORATION AND IS DELIVERED UPON THE EXPRESS CONDITION THAT THE CONTENTS WILL NOT BE DISCLOSED OR USED WITHOUT CARRIER CORPORATION'S WRITTEN CONSENT. | SUBMISSION OF THESE DRAWINGS OR DOCUMENTS DOES NOT CONSTITUTE PART PERFORMANCE OR ACCEPTANCE OF CONTRACT.

UNIT	OUTDOOR COIL TYPE	STD. UNIT WEIGHT***		CORNER WEIGHT (A)		CORNER WEIGHT (B)		CORNER WEIGHT (C)		CORNER WEIGHT (D)		C.G.		
		LBS.	KG.	LBS.	KG.	LBS.	KG.	LBS.	KG.	LBS.	KG.	X	Y	Z
48GC-M12	RTPF	1037	470	240	109	204	93	272	124	320	145	40 1/2 [1029]	34 [864]	20 1/2 [521]
RTPF - ROUND TUBE, PLATE FIN (COPPER/ALUM)														

*** STANDARD UNIT WEIGHT IS WITH LOW GAS HEAT AND WITHOUT PACKAGING.
FOR OTHER OPTIONS AND ACCESSORIES, REFER TO THE PRODUCT DATA CATALOG.

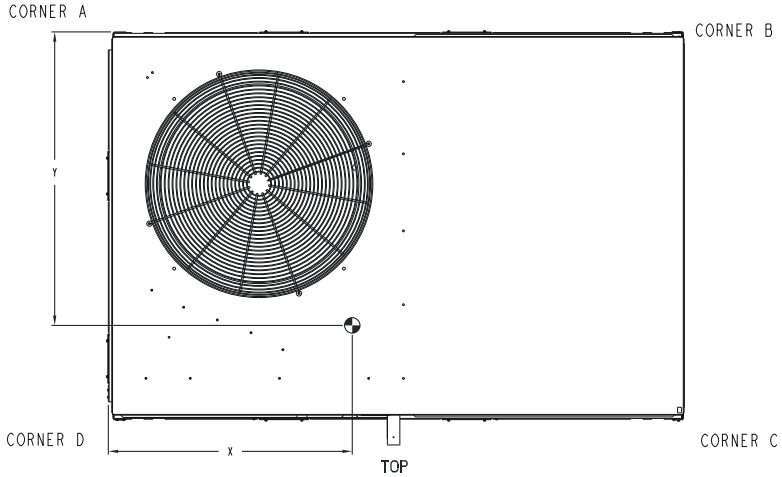

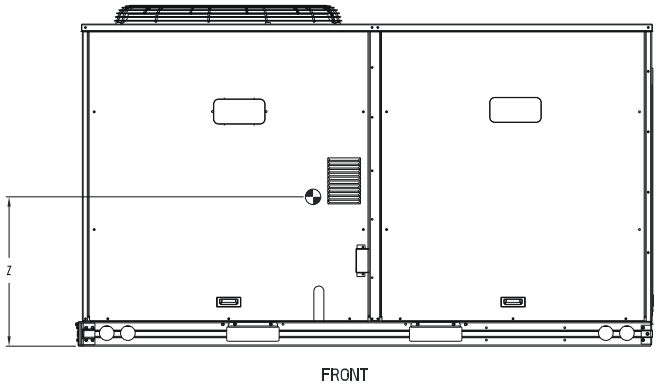

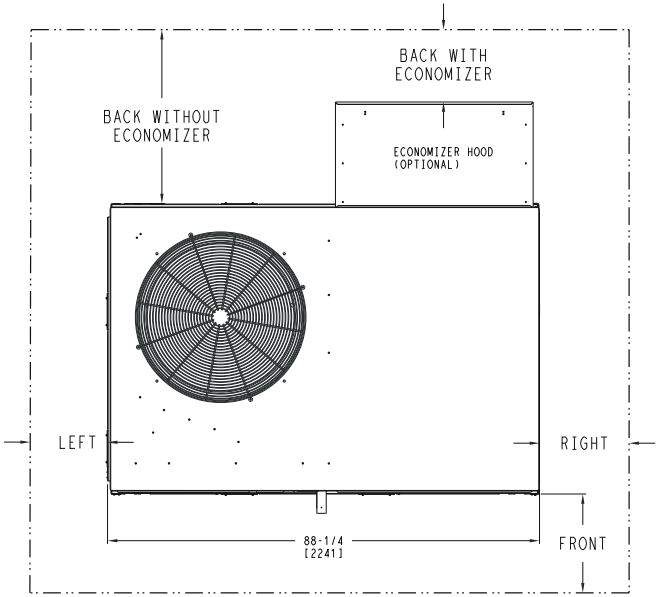

NOTE:

1. FOR ALL MINIMUM CLEARANCES LOCAL CODES OR JURISDICTIONS MAY PREVAIL.

CLEARANCE			
	SERVICE WITH:	SERVICE WITH:	OPERATING
SURFACE	CONDUCTIVE BARRIER	NONCONDUCTIVE BARRIER	CLEARANCE
FRONT	48 [1219mm]	36 [914mm]	18 [457mm]
LEFT	48 [1219mm]	42 [1067mm]	18 [457mm]
BACK W/O ECON	48 [1219mm]	42 [1067mm]	18 [457mm]
BACK W/ECON	36 [914mm]	36 [914mm]	18 [457mm]
RIGHT	36 [914mm]	36 [914mm]	18 [457mm]
TOP	72 [1829mm]	72 [1829mm]	72 [1829mm]

ITC CLASSIFICATION	SHEET	DATE	SUPERCEDES			REV
U.S. ECCN:NSR	2 OF 3	11/15/22	-	48GC-12 SINGLE ZONE ELECTRICAL COOLING WITH GAS HEAT	48TM009113	-

48GC**12 Base Unit Dimensions (cont)

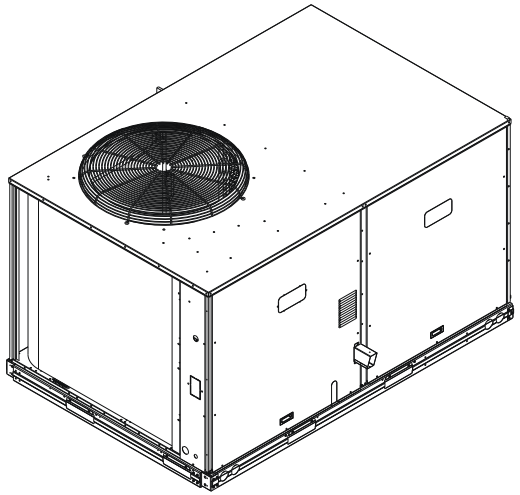

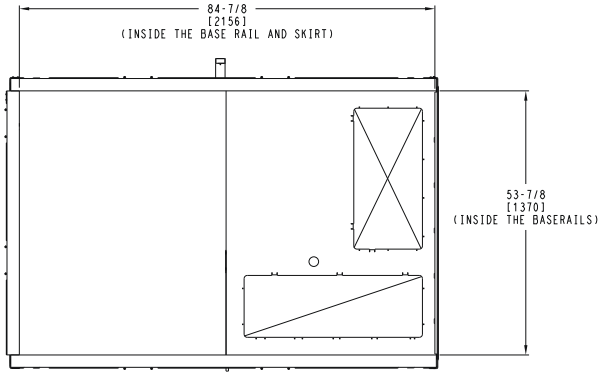

INSIDE BASERAIL DIMENSIONS
BOTTOM

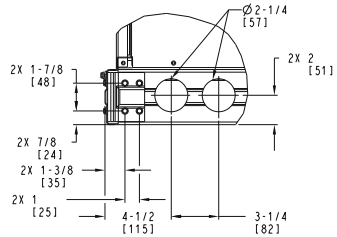

DETAIL B
AT 2 PLCS

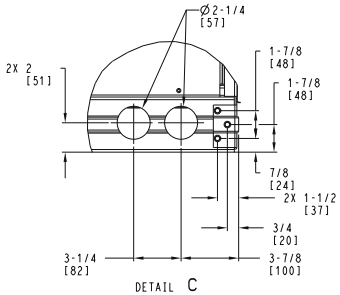

DETAIL C
AT 2 PLCS

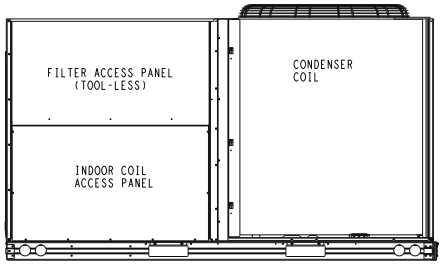

BACK

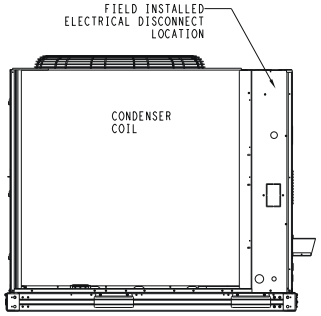

LEFT

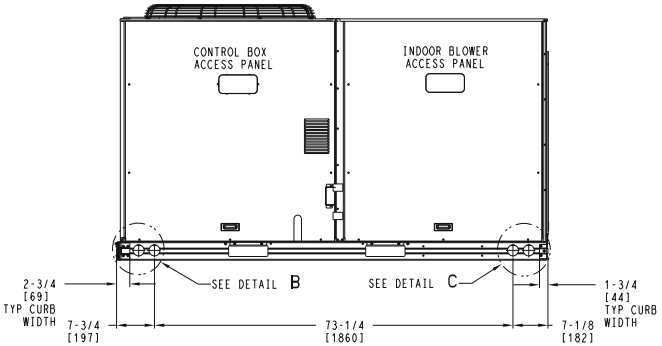

FRONT

ITC CLASSIFICATION	SHEET	DATE	SUPERCEDES			REV
U.S. ECCN:NSR	3 OF 3	11/15/22	-	48GC-12 SINGLE ZONE ELECTRICAL COOLING WITH GAS HEAT	48TM009113	-

48GC**14 Base Unit Dimensions

NOTES:

1. DIMENSIONS ARE IN INCHES, DIMENSIONS IN [ ] ARE IN MILLIMETERS.
2. CENTER OF GRAVITY
3. DIRECTION OF AIR FLOW

Carrier | THIS DOCUMENT IS THE PROPERTY OF CARRIER CORPORATION AND IS DELIVERED UPON THE EXPRESS CONDITION THAT THE CONTENTS WILL NOT BE DISCLOSED OR USED WITHOUT CARRIER CORPORATION'S WRITTEN CONSENT. | SUBMISSION OF THESE DRAWINGS OR DOCUMENTS DOES NOT CONSTITUTE PART PERFORMANCE OR ACCEPTANCE OF CONTRACT.

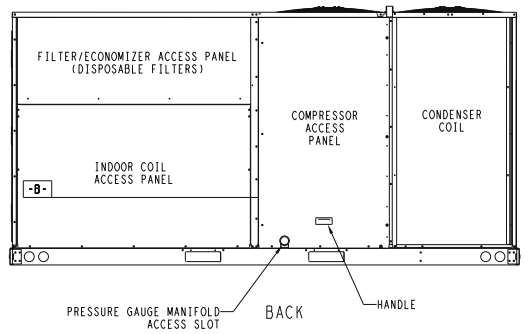

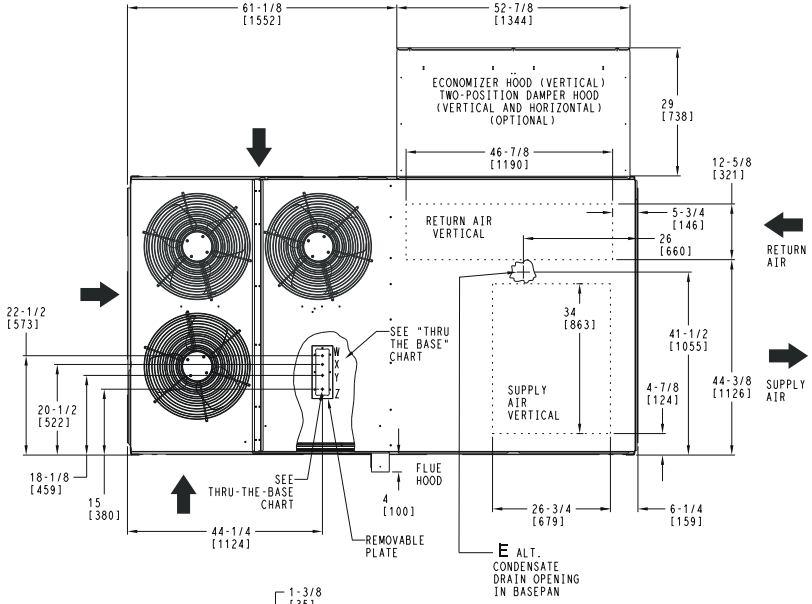

	CONNECTION SIZES
B	2 1/2" [64] DIA POWER SUPPLY HOLE
D	7/8" [22] DIA FIELD CONTROL WIRING HOLE
E	3/4"-14 NPT CONDENSATE DRAIN
F	7/8" [22] DIA FIELD CONVENIENCE OUTLET HOLE
G	3/4"-14 NPT GAS CONNECTION

THRU-THE-BASE CHART
THESE HOLES REQUIRED FOR USE
CRBTMPWR005A00,006A00,007A00

ACCESSORY NO.		THREADED CONDUIT SIZE	WIRE USE	REQ'D HOLE SIZES (MAX.)
005	W	1/2"	ACC.	7/8" [22.2]
	X	1/2"	24V	7/8" [22.2]
	Y	1 1/4"	POWER	1 1/2" [38.1]
	Z	3/4" PIPE	GAS	1 3/4" [44.5]
006	W	1/2"	ACC.	7/8" [22.2]
	X	1/2"	24V	7/8" [22.2]
	Y	1 1/2"	POWER	2" [50.8]
	Z	3/4" PIPE	GAS	1 3/4" [44.5]
007	W	1/2"	ACC.	7/8" [22.2]
	X	1/2"	24V	7/8" [22.2]
	Y	2"	POWER	2 1/2" [63.5]
	Z	3/4" PIPE	GAS	1 3/4" [44.5]
	FOR "THRU-THE-BASEPAN" FACTORY OPTION, FITTINGS FOR X & Y ARE PROVIDED AS SPECIFIED ON "006".			

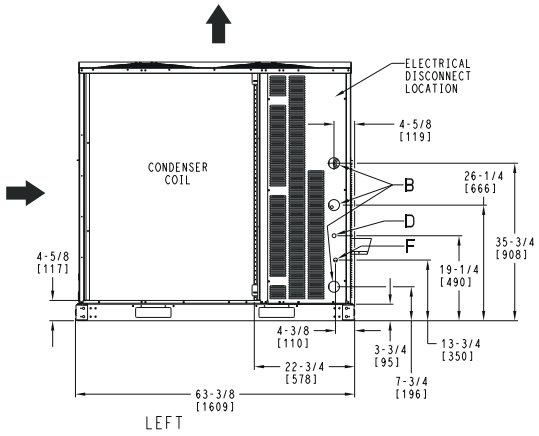

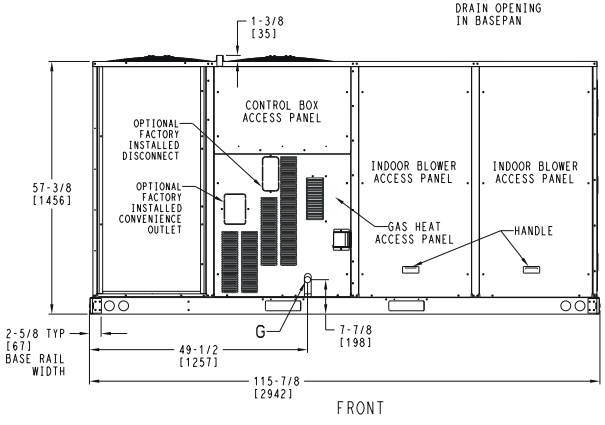

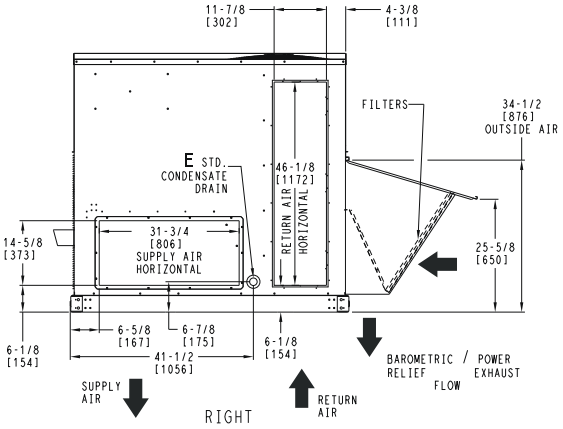

ITC CLASSIFICATION	SHEET	DATE	SUPERCEDES			REV
U.S. ECCN:NSR	1 OF 2	11/16/22	-	48GC 14 SINGLE ZONE ELECTRICAL COOLING WITH GAS HEAT	50TM002080	-

48GC**14 Base Unit Dimensions (cont)

UNIT	STD UNIT WEIGHT		CORNER WEIGHT (A)		CORNER WEIGHT (B)		CORNER WEIGHT (C)		CORNER WEIGHT (D)		C.G.		
	LBS.	KG.	LBS.	KG.	LBS.	KG.	LBS.	KG.	LBS.	KG.	X	Y	Z
48GC-M14	1390	631	330	150	336	153	365	166	358	163	58 1/2 [1486]	33 [838]	21 1/8 [537]

STANDARD UNIT WEIGHT IS WITH LOW HEAT & WITHOUT PACKAGING.
FOR OPTIONS & ACCESSORIES, REFER TO THE PRODUCT DATA CATALOG.

Carrier THIS DOCUMENT IS THE PROPERTY OF CARRIER CORPORATION AND IS DELIVERED UPON THE EXPRESS CONDITION THAT THE CONTENTS WILL NOT BE DISCLOSED OR USED WITHOUT CARRIER CORPORATION'S WRITTEN CONSENT.

SUBMISSION OF THESE DRAWINGS OR DOCUMENTS DOES NOT CONSTITUTE PART PERFORMANCE OR ACCEPTANCE OF CONTRACT.

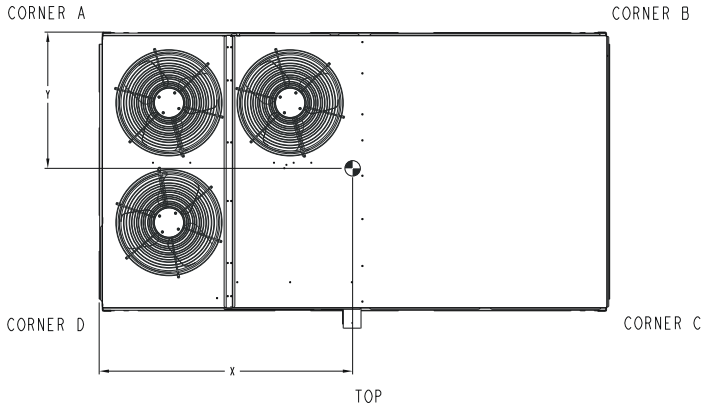

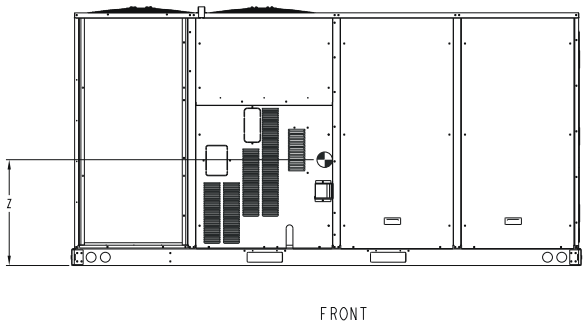

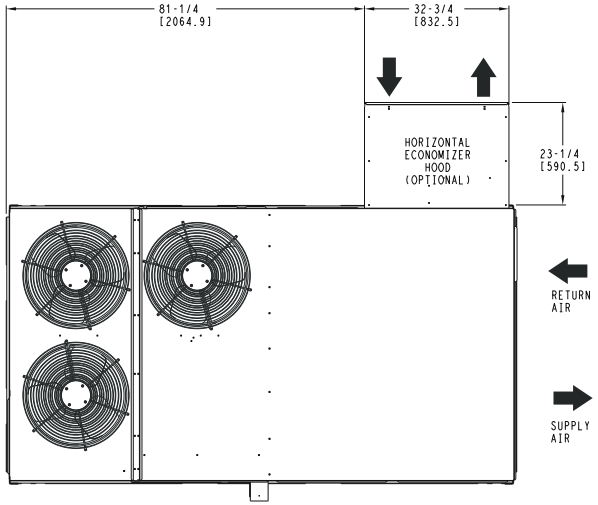

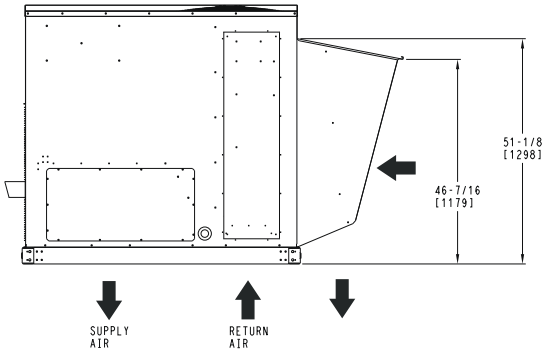

HORIZONTAL ECONOMIZER

ITC CLASSIFICATION	SHEET	DATE	SUPERCEDES			REV
U.S. ECCN:NSR	2 OF 2	11/16/22	-	48GC 14 SINGLE ZONE ELECTRICAL COOLING WITH GAS HEAT	50TM002080	-

48GC**14 Base Unit Dimensions — Clearances

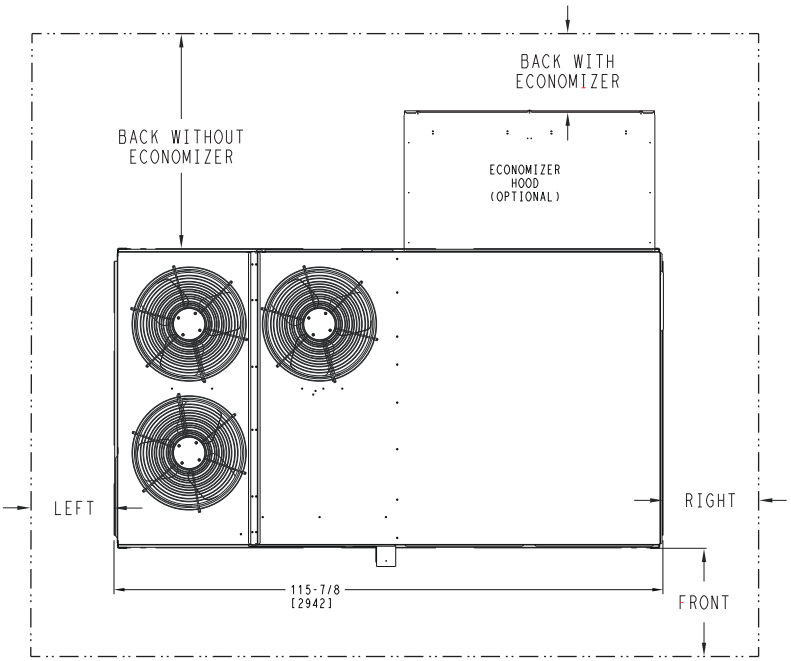

CLEARANCE[a,b]			
SURFACE	**Service with Conductive Barrier**	**Service with Non-conductive Barrier**	**Operating Clearance**
FRONT	48 in. (1219 mm)	36 in. (914 mm)	18 in. (457 mm)
LEFT	48 in. (1219 mm)	42 in. (1067 mm)	18 in. (457 mm)
BACK WITHOUT ECONOMIZER	48 in. (1219 mm)	42 in. (1067 mm)	18 in. (457 mm)
BACK WITH ECONOMIZER	36 in. (914 mm)	36 in. (914 mm)	18 in. (457 mm)
RIGHT	36 in. (914 mm)	36 in. (914 mm)	18 in. (457 mm)
TOP	72 in. (1829 mm)	72 in. (1829 mm)	72 in. (1829 mm)

NOTE(S):

a. For all minimum clearances local codes or jurisdictions may prevail.
b. See page 20 for 48GC 07-09 clearances. See page 23 for 48GC 12 clearances.

50GC**07-09 Base Unit Dimensions

NOTES:

1. DIMENSIONS ARE IN INCHES, DIMENSIONS IN [ ] ARE IN MILLIMETERS.
2. CENTER OF GRAVITY
3. DIRECTION OF AIR FLOW
4. ALL VIEW DRAWN USING 3RD ANGLE

UNIT	OUTDOOR COIL TYPE	J	K	H
50GC-M07	RTPF	41 1/4 [1048]	33 3/4 [857]	15 7/8 [403]
50GC-M08	RTPF	49 3/8 [1253]	36 3/8 [925]	15 7/8 [403]
50GC-M09	RTPF	49 3/8 [1253]	36 3/8 [925]	15 7/8 [403]
RTPF - ROUND TUBE, PLATE FIN (COPPER/ALUM)				

Carrier

THIS DOCUMENT IS THE PROPERTY OF CARRIER CORPORATION AND IS DELIVERED UPON THE EXPRESS CONDITION THAT THE CONTENTS WILL NOT BE DISCLOSED OR USED WITHOUT CARRIER CORPORATION'S WRITTEN CONSENT.

SUBMISSION OF THESE DRAWINGS OR DOCUMENTS DOES NOT CONSTITUTE PART PERFORMANCE OR ACCEPTANCE OF CONTRACT.

CONNECTION SIZES	
A	1 3/8" [35] DIA FIELD POWER SUPPLY HOLE
B	2 1/2" [64] DIA POWER SUPPLY KNOCKOUT
C	1 3/4" [51] DIA GAUGE ACCESS PLUG
D	7/8" [22] DIA FIELD CONTROL WIRING HOLE
E	3/4"-14 NPT CONDENSATE DRAIN
G	2" [51] DIA POWER SUPPLY KNOCK-OUT

THRU-THE-BASE CHART (FIELD INST)

THESE HOLES REQUIRED FOR USE WITH ACCY KITS: CRBTMPWR002A01

	THREADED CONDUIT SIZE	WIRE USE	REQ'D HOLE SIZES (MAX.)
W	1/2"	ACC.	7/8" [22.2]
X	1/2"	24V	7/8" [22.2]
Y	1 1/4" (002)	POWER	1 3/4" [44.4]

THRU-THE-BASE CHART (FIOP)

FOR "THRU-THE-BASEPAN" FACTORY OPTION, FITTINGS FOR ONLY X & Y ARE PROVIDED: (1) 1/2" & (1) 1 1/4" ELECTRICAL FITTINGS.

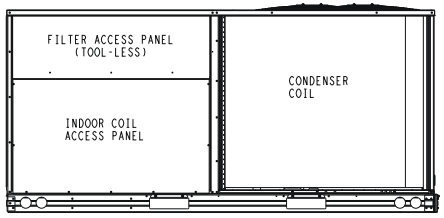

BACK

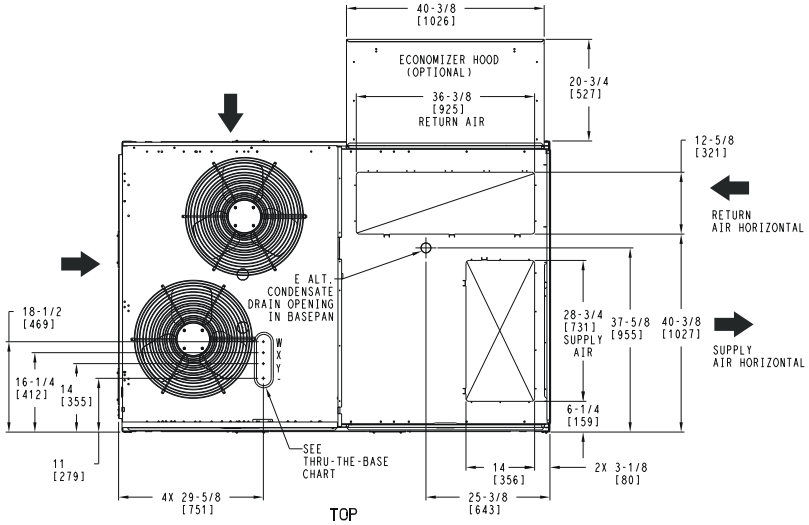

TOP

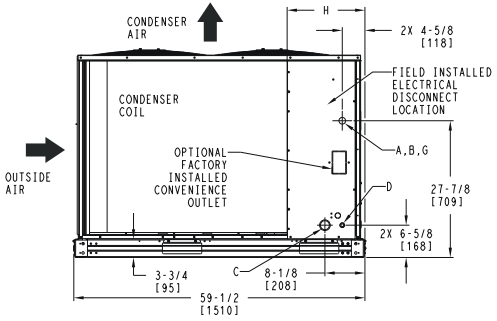

LEFT

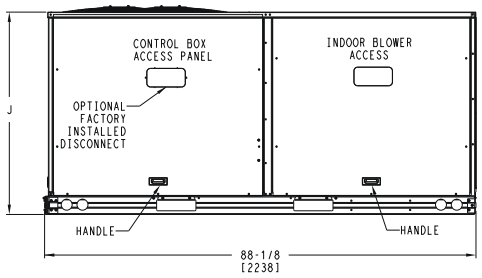

FRONT

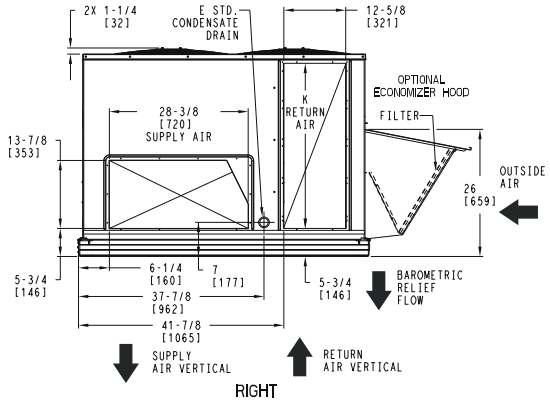

RIGHT

ITC CLASSIFICATION	SHEET	DATE	SUPERCEDES			REV
U.S. ECCN:NSR	1 OF 3	11/16/22	-	50GC 07-09 SINGLE ZONE ELECTRICAL COOLING WITH ELECTRIC HEAT	48TM009129	-

50GC**07-09 Base Unit Dimensions (cont)

Carrier | THIS DOCUMENT IS THE PROPERTY OF CARRIER CORPORATION AND IS DELIVERED UPON THE EXPRESS CONDITION THAT THE CONTENTS WILL NOT BE DISCLOSED OR USED WITHOUT CARRIER CORPORATION'S WRITTEN CONSENT. | SUBMISSION OF THESE DRAWINGS OR DOCUMENTS DOES NOT CONSTITUTE PART PERFORMANCE OR ACCEPTANCE OF CONTRACT.

UNIT	OUTDOOR COIL TYPE	STD. UNIT WEIGHT ***		CORNER WEIGHT (A)		CORNER WEIGHT (B)		CORNER WEIGHT (C)		CORNER WEIGHT (D)		C.G.		
		LBS.	KG.	LBS.	KG.	LBS.	KG.	LBS.	KG.	LBS.	KG.	X	Y	Z
50GC-M07	RTPF	714	324	174	79	144	65	180	82	216	98	40 [1016]	33 [838]	19 7/8 [505]
50GC-M08	RTPF	830	376	192	87	153	69	214	97	270	123	39 [991]	34 3/4 [883]	18 5/8 [473]
50GC-M09	RTPF	830	376	192	87	153	69	214	97	270	123	39 [991]	34 3/4 [883]	18 5/8 [473]
RTPF - ROUND TUBE, PLATE FIN (COPPER/ALUM)														

*** STANDARD UNIT WEIGHT IS WITHOUT ELECTRIC HEAT AND WITHOUT PACKAGING.
FOR OTHER OPTIONS AND ACCESSORIES, REFER TO THE PRODUCT DATA CATALOG.

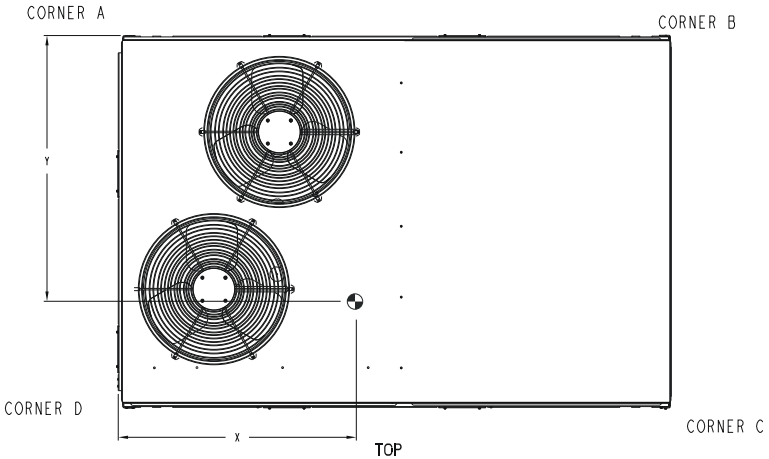

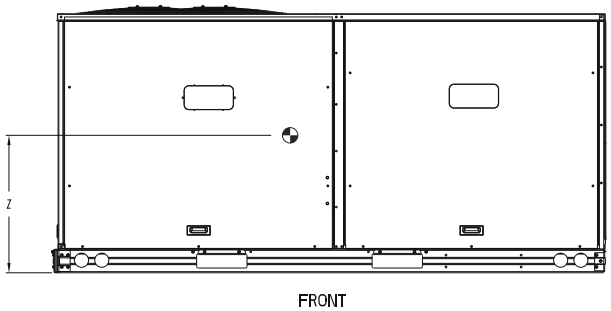

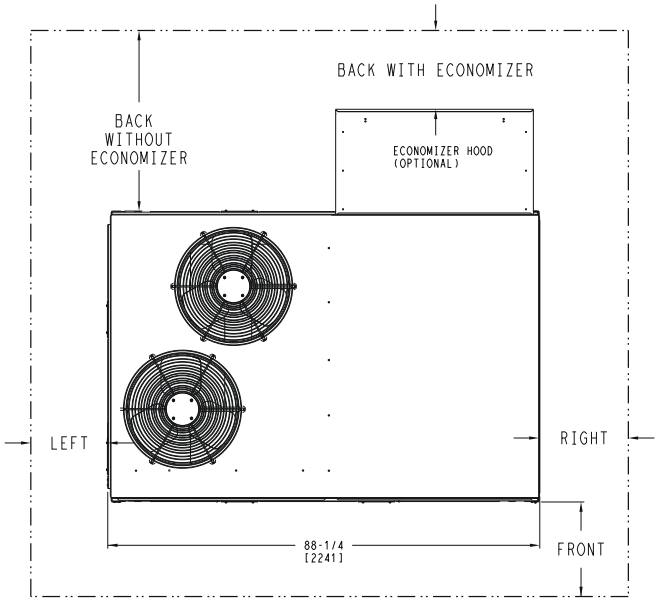

NOTE:

1. FOR ALL MINIMUM CLEARANCES LOCAL CODES OR JURISDICTIONS MAY PREVAIL.

CLEARANCE			
	SERVICE WITH:	SERVICE WITH:	OPERATING
SURFACE	CONDUCTIVE BARRIER	NONCONDUCTIVE BARRIER	CLEARANCE
FRONT	48 [1219mm]	36 [914mm]	18 [457mm]
LEFT	48 [1219mm]	42 [1067mm]	18 [457mm]
BACK W/O ECON	48 [1219mm]	42 [1067mm]	18 [457mm]
BACK W/ECON	36 [914mm]	36 [914mm]	18 [457mm]
RIGHT	36 [914mm]	36 [914mm]	18 [457mm]
TOP	72 [1829mm]	72 [1829mm]	72 [1829mm]

ITC CLASSIFICATION	SHEET	DATE	SUPERCEDES			REV
U.S. ECCN:NSR	2 OF 3	11/16/22	-	50GC 07-09 SINGLE ZONE ELECTRICAL COOLING WITH ELECTRIC HEAT	48TM009129	-

50GC**07-09 Base Unit Dimensions (cont)

Carrier | THIS DOCUMENT IS THE PROPERTY OF CARRIER CORPORATION AND IS DELIVERED UPON THE EXPRESS CONDITION THAT THE CONTENTS WILL NOT BE DISCLOSED OR USED WITHOUT CARRIER CORPORATION'S WRITTEN CONSENT. | SUBMISSION OF THESE DRAWINGS OR DOCUMENTS DOES NOT CONSTITUTE PART PERFORMANCE OR ACCEPTANCE OF CONTRACT.

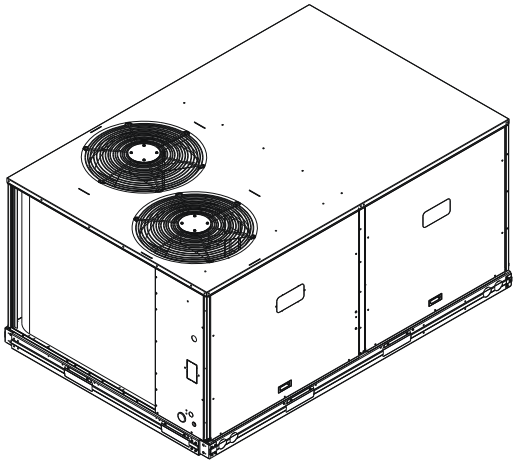

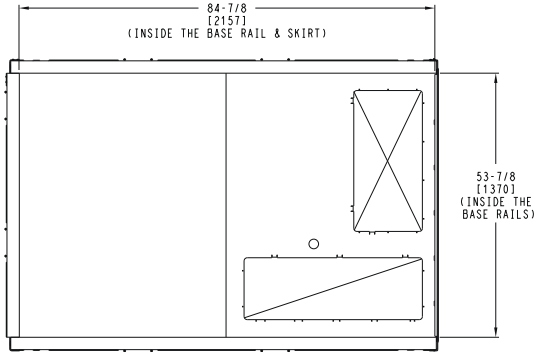

INSIDE BASERAIL DIMENSIONS

BOTTOM

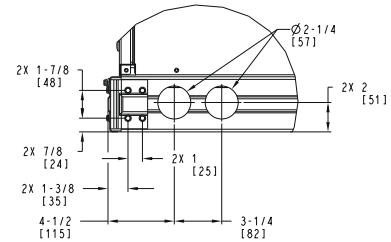

DETAIL B
AT 2 PLCS

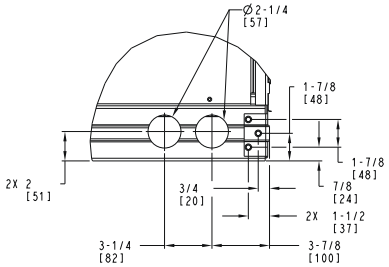

DETAIL C
AT 2 PLCS

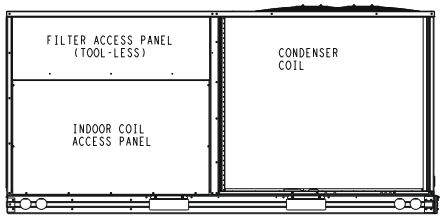

BACK

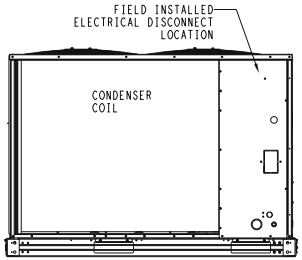

LEFT

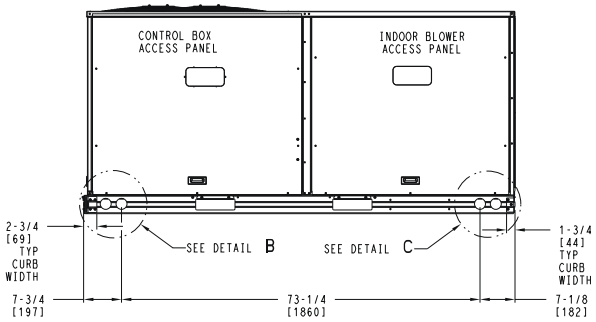

FRONT

ITC CLASSIFICATION	SHEET	DATE	SUPERCEDES			REV
U.S. ECCN:NSR	3 OF 3	11/16/22	-	50GC 07-09 SINGLE ZONE ELECTRICAL COOLING WITH ELECTRIC HEAT	48TM009129	-

50GC**12 Base Unit Dimensions

NOTES:

1. DIMENSIONS ARE IN INCHES, DIMENSIONS IN [ ] ARE IN MILLIMETERS.
2. CENTER OF GRAVITY
3. DIRECTION OF AIR FLOW
4. ALL VIEW DRAWN USING 3RD ANGLE

Carrier THIS DOCUMENT IS THE PROPERTY OF CARRIER CORPORATION AND IS DELIVERED UPON THE EXPRESS CONDITION THAT THE CONTENTS WILL NOT BE DISCLOSED OR USED WITHOUT CARRIER CORPORATION'S WRITTEN CONSENT. SUBMISSION OF THESE DRAWINGS OR DOCUMENTS DOES NOT CONSTITUTE PART PERFORMANCE OR ACCEPTANCE OF CONTRACT.

UNIT	OUTDOOR COIL TYPE	H
50GC-M12	RTPF	15 7/8 [403]
RTPF - ROUND TUBE, PLATE FIN (COPPER/ALUM)		

	CONNECTION SIZES
A	1 3/8" [35] DIA FIELD POWER SUPPLY HOLE
B	2 1/2" [64] DIA POWER SUPPLY KNOCKOUT
C	1 3/4" [51] DIA GAUGE ACCESS PLUG
D	7/8" [22] DIA FIELD CONTROL WIRING HOLE
E	3/4"-14 NPT CONDENSATE DRAIN
G	2" [51] DIA POWER SUPPLY KNOCK-OUT

THRU-THE-BASE CHART THESE HOLES REQUIRED FOR USE CRBTMPWR002A01			
	THREADED CONDUIT SIZE	WIRE USE	REQ'D HOLE SIZES (MAX.)
W	1/2"	ACC.	7/8" [22.2]
X	1/2"	24V	7/8" [22.2]
Y	1 1/4" (002)	POWER	1 3/4" [44.4]
	FOR "THRU-THE-BASEPAN" FACTORY OPTION, FITTINGS FOR ONLY X & Y ARE PROVIDED		

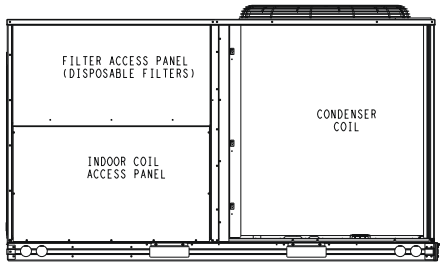

BACK

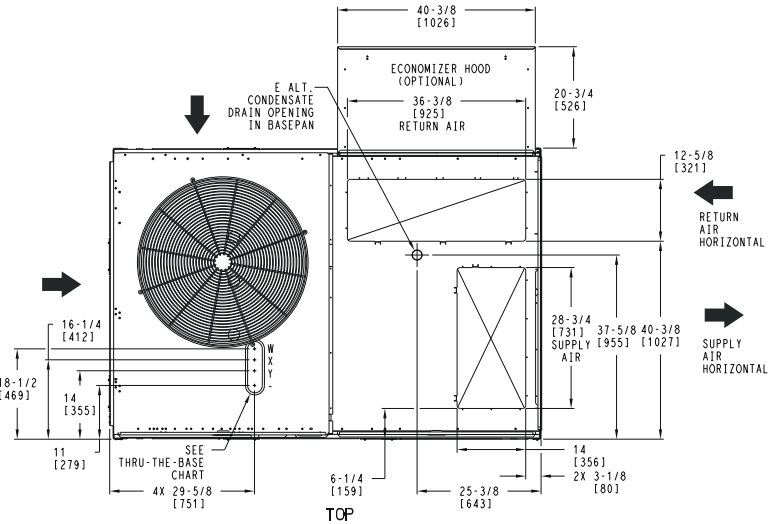

TOP

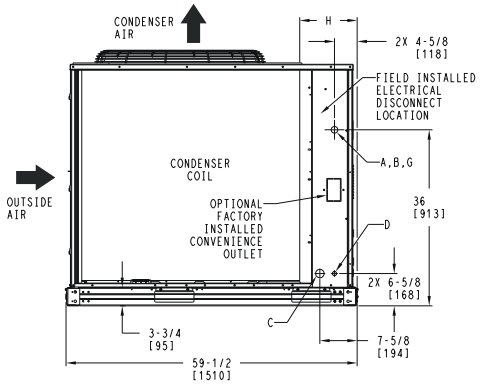

LEFT

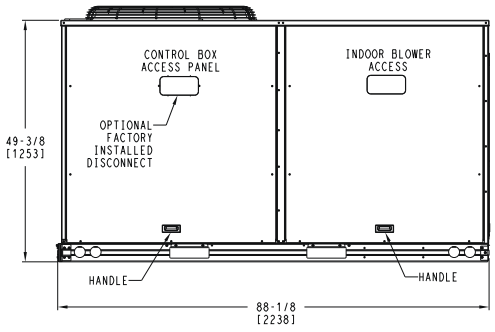

FRONT

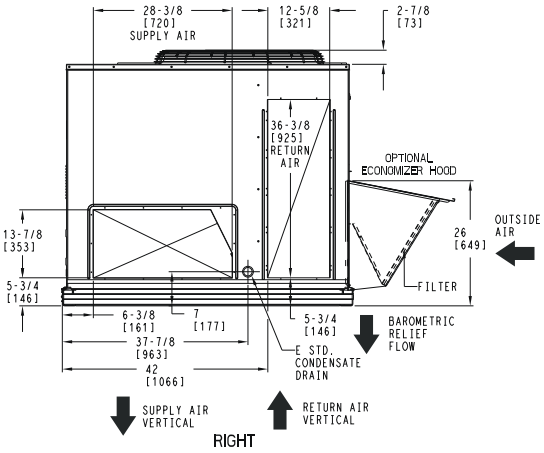

RIGHT

ITC CLASSIFICATION	SHEET	DATE	SUPERCEDES			REV
U.S. ECCN:NSR	1 OF 3	11/15/22	-	50GC-12 SINGLE ZONE ELECTRICAL COOLING WITH ELECTRIC HEAT	48TM009114	-

50GC**12 Base Unit Dimensions (cont)

UNIT	OUTDOOR COIL TYPE	STD. UNIT WEIGHT***		CORNER WEIGHT (A)		CORNER WEIGHT (B)		CORNER WEIGHT (C)		CORNER WEIGHT (D)		C.G.		
		LBS.	KG.	LBS.	KG.	LBS.	KG.	LBS.	KG.	LBS.	KG.	X	Y	Z
50GC-M12	RTPF	971	440	234	106	182	82	242	110	312	142	38 1/2 [978]	34 [864]	20 1/2 [521]
RTPF - ROUND TUBE, PLATE FIN (COPPER/ALUM)														

*** STANDARD UNIT WEIGHT IS WITHOUT ELECTRIC HEAT AND WITHOUT PACKAGING.
FOR OTHER OPTIONS AND ACCESSORIES, REFER TO THE PRODUCT DATA CATALOG.

Carrier THIS DOCUMENT IS THE PROPERTY OF CARRIER CORPORATION AND IS DELIVERED UPON THE EXPRESS CONDITION THAT THE CONTENTS WILL NOT BE DISCLOSED OR USED WITHOUT CARRIER CORPORATION'S WRITTEN CONSENT.

SUBMISSION OF THESE DRAWINGS OR DOCUMENTS DOES NOT CONSTITUTE PART PERFORMANCE OR ACCEPTANCE OF CONTRACT.

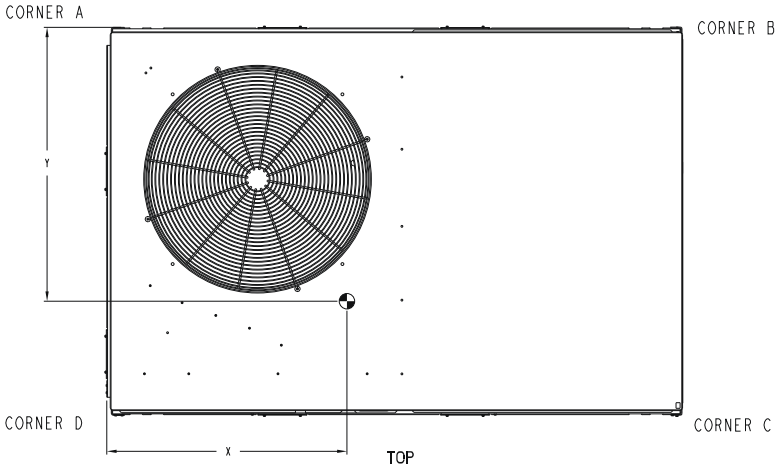

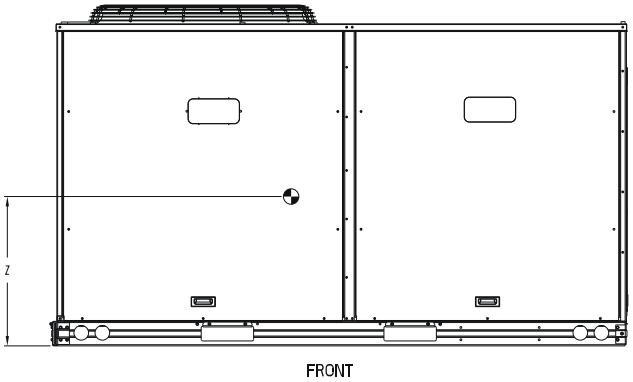

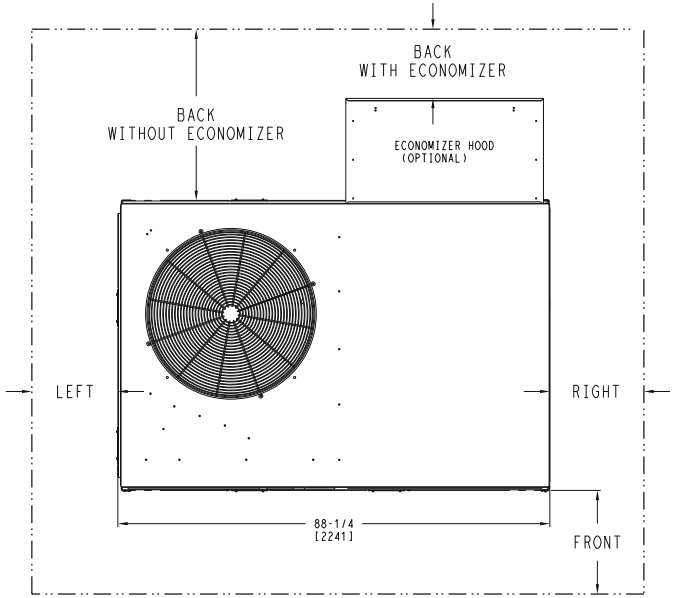

NOTE:

1. FOR ALL MINIMUM CLEARANCES LOCAL CODES OR JURISDICTIONS MAY PREVAIL.

CLEARANCE			
	SERVICE WITH:	SERVICE WITH:	OPERATING
SURFACE	CONDUCTIVE BARRIER	NONCONDUCTIVE BARRIER	CLEARANCE
FRONT	48 [1219mm]	36 [914mm]	18 [457mm]
LEFT	48 [1219mm]	42 [1067mm]	18 [457mm]
BACK W/O ECON	48 [1219mm]	42 [1067mm]	18 [457mm]
BACK W/ECON	36 [914mm]	36 [914mm]	18 [457mm]
RIGHT	36 [914mm]	36 [914mm]	18 [457mm]
TOP	72 [1829mm]	72 [1829mm]	72 [1829mm]

ITC CLASSIFICATION	SHEET	DATE	SUPERCEDES			REV
U.S. ECCN:NSR	2 OF 3	11/15/22	-	50GC-12 SINGLE ZONE ELECTRICAL COOLING WITH ELECTRIC HEAT	48TM009114	-

50GC**12 Base Unit Dimensions (cont)

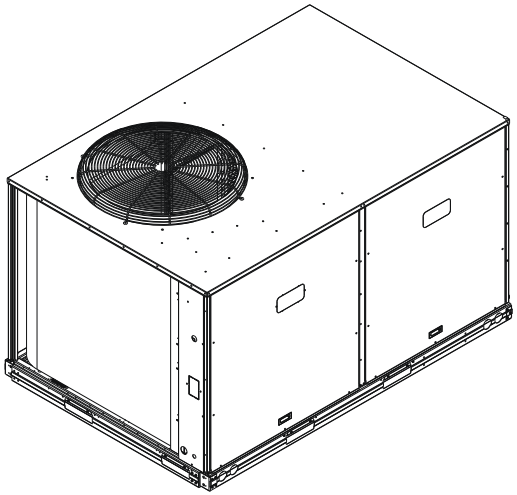

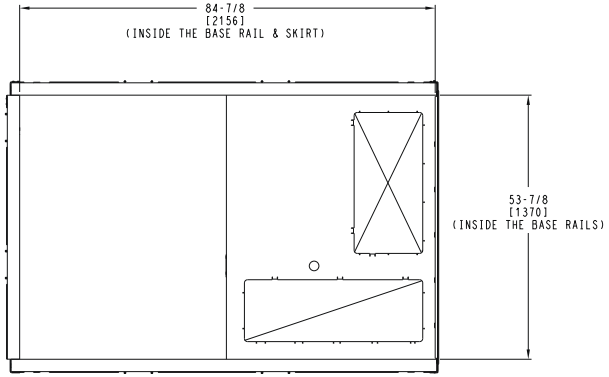

INSIDE BASERAIL DIMENSIONS
BOTTOM

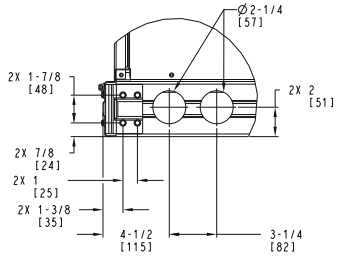

DETAIL B
TYP 2 PLCS

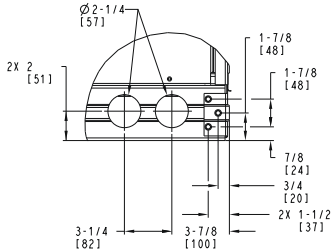

DETAIL C
TYP 2 PLCS

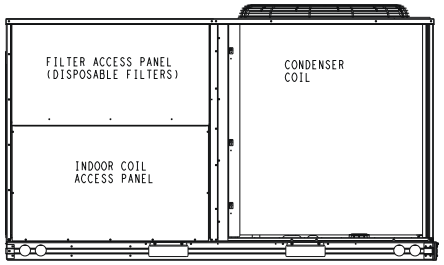

BACK

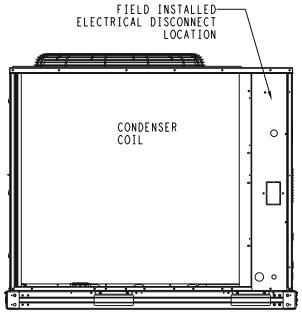

LEFT

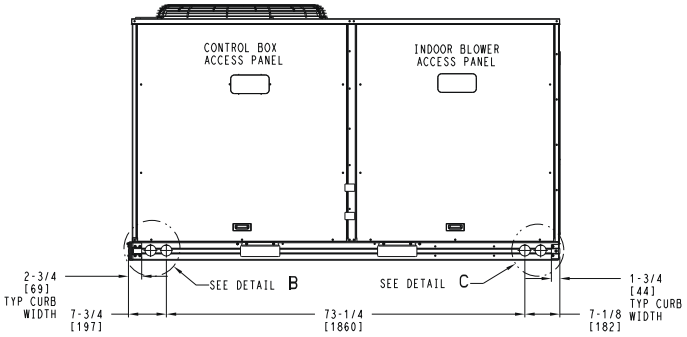

FRONT

Carrier

THIS DOCUMENT IS THE PROPERTY OF CARRIER CORPORATION AND IS DELIVERED UPON THE EXPRESS CONDITION THAT THE CONTENTS WILL NOT BE DISCLOSED OR USED WITHOUT CARRIER CORPORATION'S WRITTEN CONSENT.

SUBMISSION OF THESE DRAWINGS OR DOCUMENTS DOES NOT CONSTITUTE PART PERFORMANCE OR ACCEPTANCE OF CONTRACT.

ITC CLASSIFICATION	SHEET	DATE	SUPERCEDES			REV
U.S. ECCN:NSR	3 OF 3	11/15/22	-	50GC-12 SINGLE ZONE ELECTRICAL COOLING WITH ELECTRIC HEAT	48TM009114	-

50GC**14 Base Unit Dimensions

NOTES:

1. DIMENSIONS ARE IN INCHES, DIMENSIONS IN [ ] ARE IN MILLIMETERS.
2. CENTER OF GRAVITY
3. DIRECTION OF AIR FLOW

Carrier | THIS DOCUMENT IS THE PROPERTY OF CARRIER CORPORATION AND IS DELIVERED UPON THE EXPRESS CONDITION THAT THE CONTENTS WILL NOT BE DISCLOSED OR USED WITHOUT CARRIER CORPORATION'S WRITTEN CONSENT. | SUBMISSION OF THESE DRAWINGS OR DOCUMENTS DOES NOT CONSTITUTE PART PERFORMANCE OR ACCEPTANCE OF CONTRACT.

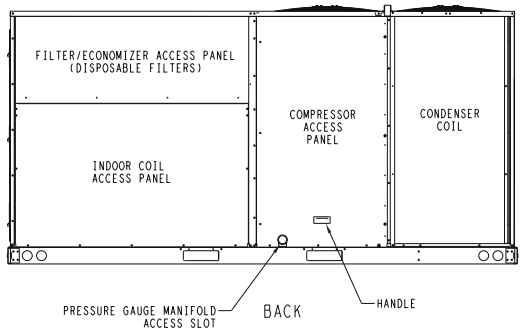

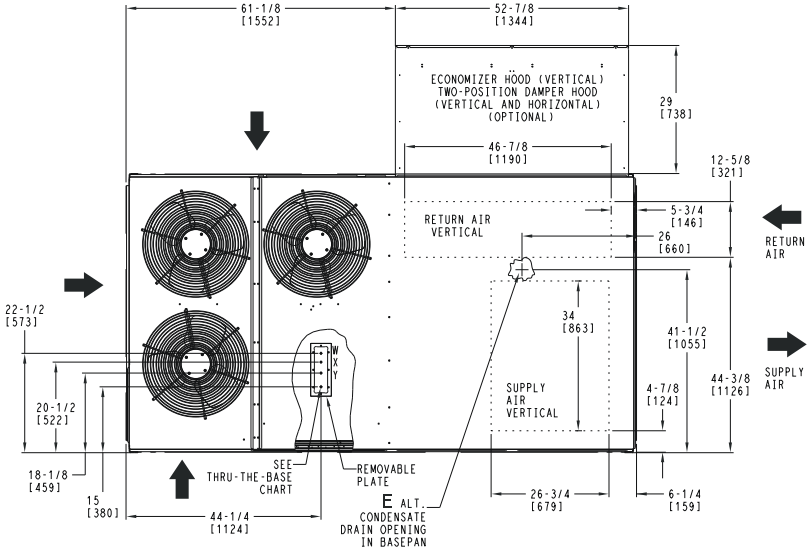

	CONNECTION SIZES
B	2 1/2" [64] DIA POWER SUPPLY HOLE
D	7/8" [22] DIA FIELD CONTROL WIRING HOLE
E	3/4"-14 NPT CONDENSATE DRAIN
F	7/8" [22] DIA FIELD CONVENIENCE OUTLET HOLE

THRU-THE-BASE CHART
THESE HOLES REQUIRED FOR USE
CRBTMPWR005A00,006A00,007A00

ACCESSORY NO.		THREADED CONDUIT SIZE	WIRE USE	REQ'D HOLE SIZES (MAX.)
005	W	1/2"	ACC.	7/8" [22.2]
	X	1/2"	24V	7/8" [22.2]
	Y	1 1/4"	POWER	1 1/2" [38.1]
006	W	1/2"	ACC.	7/8" [22.2]
	X	1/2"	24V	7/8" [22.2]
	Y	1 1/2"	POWER	2" [50.8]
007	W	1/2"	ACC.	7/8" [22.2]
	X	1/2"	24V	7/8" [22.2]
	Y	2"	POWER	2 1/2" [63.5]
	FOR "THRU-THE-BASEPAN" FACTORY OPTION, FITTINGS FOR X & Y ARE PROVIDED AS SPECIFIED ON "006".			

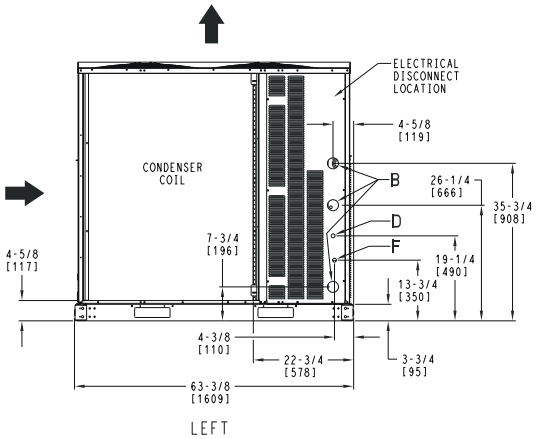

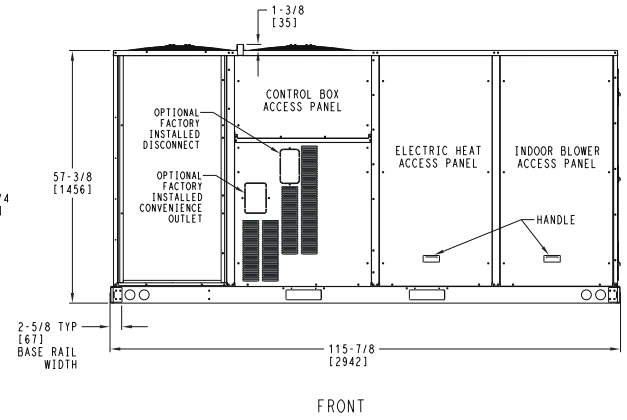

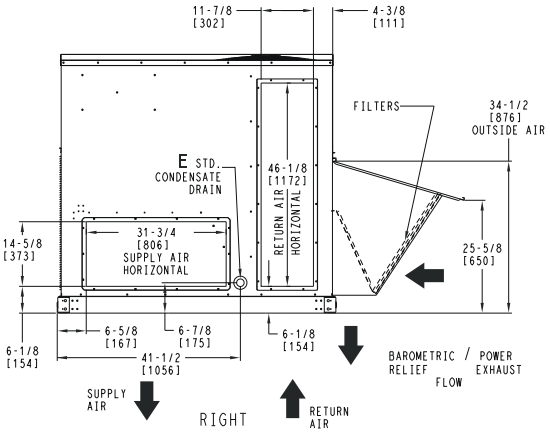

ITC CLASSIFICATION	SHEET	DATE	SUPERCEDES			REV
U.S. ECCN:NSR	1 OF 2	11/16/22	-	50GC 14 SINGLE ZONE ELECTRICAL COOLING WITH ELECTRIC HEAT	50TM002942	-

50GC**14 Base Unit Dimensions (cont)

UNIT	STD UNIT WEIGHT		CORNER WEIGHT (A)		CORNER WEIGHT (B)		CORNER WEIGHT (C)		CORNER WEIGHT (D)		C.G.		
	LBS.	KG.	LBS.	KG.	LBS.	KG.	LBS.	KG.	LBS.	KG.	X	Y	Z
50GC-M14	1313	596	324	147	305	138	331	150	353	160	56 1/8 [1426]	33 [838]	21 1/8 [537]

STANDARD UNIT WEIGHT IS WITHOUT ELECTRIC HEAT & WITHOUT PACKAGING.
FOR OPTIONS & ACCESSORIES, REFER TO THE PRODUCT DATA CATALOG.

Carrier
THIS DOCUMENT IS THE PROPERTY OF CARRIER CORPORATION AND IS DELIVERED UPON THE EXPRESS CONDITION THAT THE CONTENTS WILL NOT BE DISCLOSED OR USED WITHOUT CARRIER CORPORATION'S WRITTEN CONSENT.
SUBMISSION OF THESE DRAWINGS OR DOCUMENTS DOES NOT CONSTITUTE PART PERFORMANCE OR ACCEPTANCE OF CONTRACT.

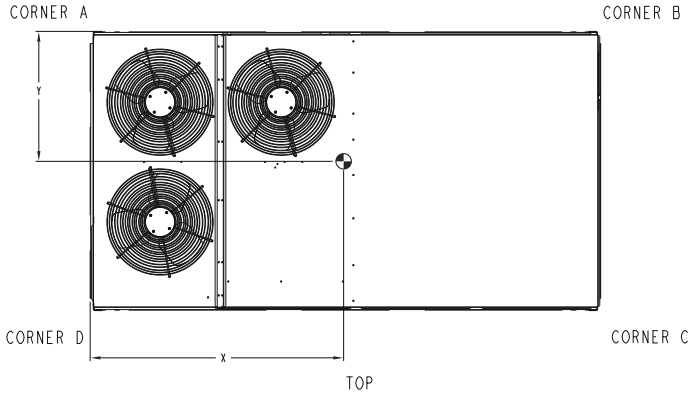

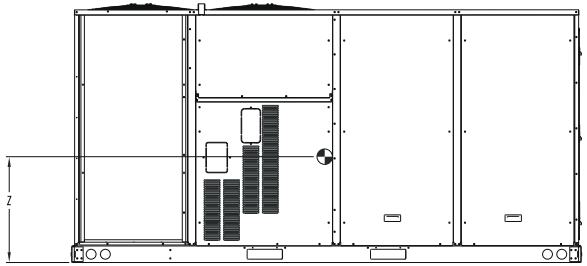

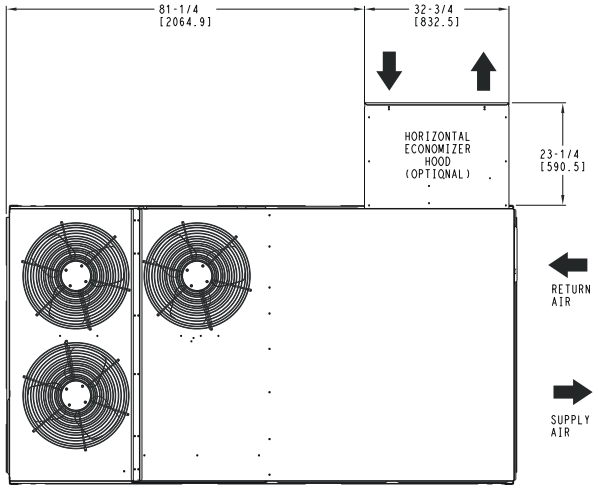

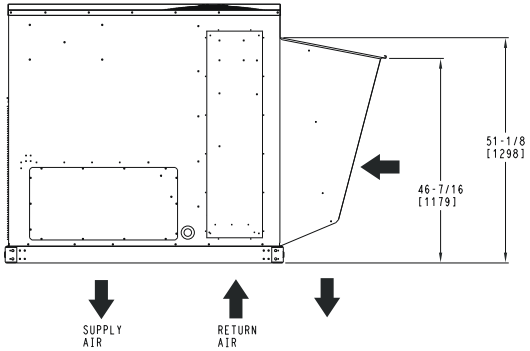

HORIZONTAL ECONOMIZER

ITC CLASSIFICATION	SHEET	DATE	SUPERCEDES			REV
U.S. ECCN:NSR	2 OF 2	11/16/22	-	50GC 14 SINGLE ZONE ELECTRICAL COOLING WITH ELECTRIC HEAT	50TM002942	-

50GC**14 Base Unit Dimensions — Clearances

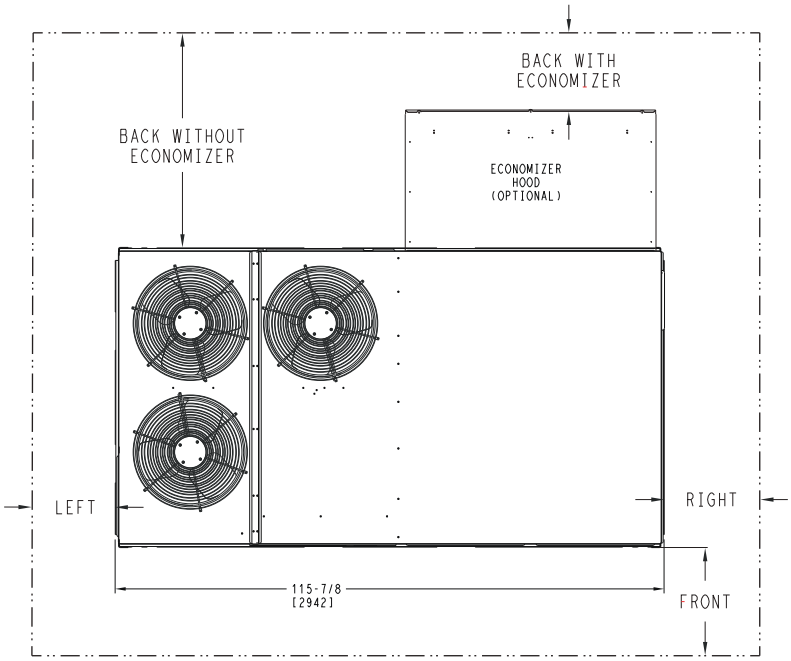

CLEARANCE[a,b]			
SURFACE	**Service with Conductive Barrier**	**Service with Non-conductive Barrier**	**Operating Clearance**
FRONT	48 in. (1219 mm)	36 in. (914 mm)	18 in. (457 mm)
LEFT	48 in. (1219 mm)	42 in. (1067 mm)	18 in. (457 mm)
BACK WITHOUT ECONOMIZER	48 in. (1219 mm)	42 in. (1067 mm)	18 in. (457 mm)
BACK WITH ECONOMIZER	36 in. (914 mm)	36 in. (914 mm)	18 in. (457 mm)
RIGHT	36 in. (914 mm)	36 in. (914 mm)	18 in. (457 mm)
TOP	72 in. (1829 mm)	72 in. (1829 mm)	72 in. (1829 mm)

NOTE(S):

a. For all minimum clearances local codes or jurisdictions may prevail.
b. See page 29 for 50GC 07-09 clearances. See page 32 for 50GC 12 clearances.

Roof Curb Dimensions — 48/50GC 07-12

ROOF CURB ACCESSORY #	A
CRRFCURB003A01	14" [356]
CRRFCURB004A01	24" [610]

NOTES:
1. ROOFCURB ACCESSORY IS SHIPPED DISASSEMBLED.
2. INSULATED PANELS: 25.4 [1"] THK. POLYURETHANE FOAM, 44.5 [1-3/4] # DENSITY.
3. DIMENSIONS IN [ ] ARE IN MILLIMETERS.
4. ROOFCURB: 18 GAGE STEEL.
5. ATTACH DUCTWORK TO CURB. (FLANGES OF DUCT REST ON CURB).
6. SERVICE CLEARANCE 4 FEET ON EACH SIDE.
7. DIRECTION OF AIR FLOW.
8. CONNECTOR PACKAGE CRBTMPWR002A01 IS FOR THRU-THE-CURB GAS TYPE PACKAGE CRBTMPWR004A01 IS FOR THRU-THE-BOTTOM TYPE GAS CONNECTIONS.

CONNECTOR PKG. ACC.	GAS CONNECTION TYPE	GAS FITTING	POWER WIRING FITTING	CONTROL WIRING FITTING	ACCESSORY CONVENIENCE OUTLET WIRING CONNECTOR
CRBTMPWR002A01	THRU THE CURB	3/4" [19] NPT	1 1/4" [31.7] NPT	1/2" [12.7] NPT	1/2" [12.7] NPT
CRBTMPWR004A01	THRU THE BOTTOM				

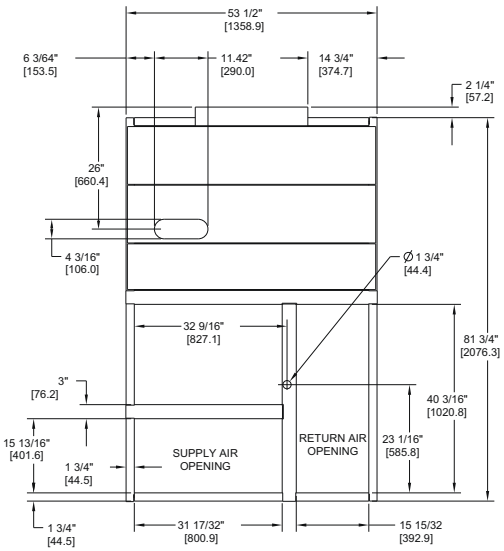

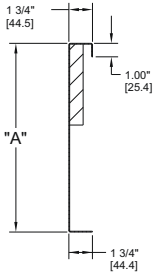

SECTION THRU SIDE

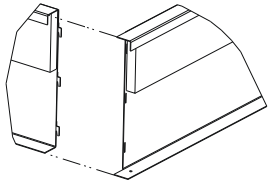

VIEW "B"
CORNER DETAIL

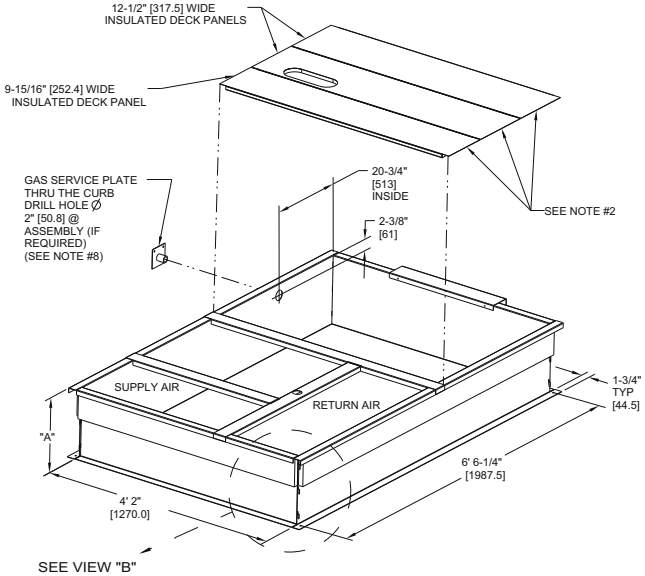

CERTIFIED DRAWING

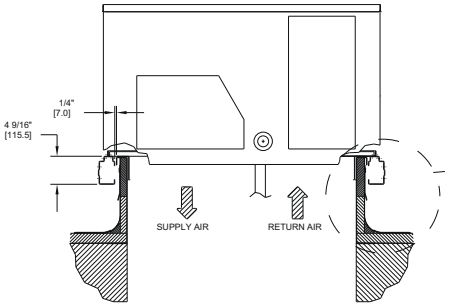

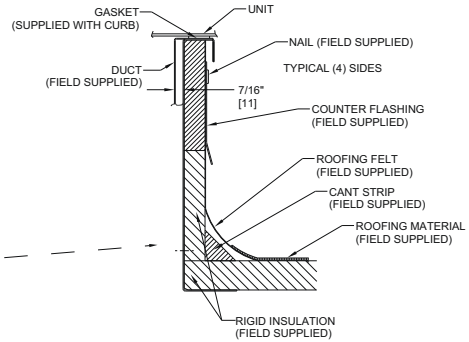

REV	REVISION RECORD	DATE	BY	CHK'D	APP'D	ECN NO.
C	6' 61/4" WAS 6' 7 1/6", 4'2' WAS 4' 2 13/16"; 18 GA WAS 16 GA.; 15 13/16" WAS 15 15/16"; NAIL FIELD SUPPLIED WAS WITH CURB	4/22/13	MMC	-	-	1067898

DRAWING RELEASE LEVEL: PRODUCTION

THIRD ANGLE PROJECTION

UNLESS OTHERWISE SPECIFIED DIMENSIONS ARE IN INCHES TOLERANCES ON: 1 DEC ± - 2 DEC ± - 3 DEC ± - ANG ± -°

THIS DOCUMENT AND THE INFORMATION CONTAINED THEREIN IS PROPRIETARY TO CARRIER CORPORATION AND SHALL NOT BE USED OR DISCLOSED TO OTHERS, IN WHOLE OR IN PART, WITHOUT THE WRITTEN AUTHORIZATION OF CARRIER CORPORATION.

MATERIAL: - - -

AUTHORIZATION NUMBER: 1029120

TITLE: CURB ASY, ROOF

ENGINEERING REQUIREMENTS: T-005, Y-002

ENGINEERING: - - MANUFACTURING: - -

WEIGHT: -

DRAFTER: MMC 12/16/09 CHECKER: - -

SIZE: D DRAWING NUMBER: 50HJ405012 SHEET 5 OF 5 REV: C

SURFACE FINISH: - MFG/PURCH: PURCH MODEL (INTERNAL USE ONLY)

NEXT DRAWING: - SCALE: N/A DISTRIBUTION: -

Roof Curb Dimensions — 48/50GC 14

ROOF CURB ACCESSORY #	A
CRRFCURB074A00	14" [356]
CRRFCURB075A00	24" [610]

NOTES:
1. ROOFCURB ACCESSORY IS SHIPPED DISASSEMBLED.
2. INSULATED PANELS: 1/2" THK. NEOPRENE FOAM, 1.0# DENSITY.
3. DIMENSIONS IN [ ] ARE IN MILLIMETERS.
4. ROOFCURB SIDEWALLS: 16 GAGE STEEL.
5. ATTACH DUCTWORK TO CURB. (FLANGES OF DUCT REST ON CURB).
6. SERVICE CLEARANCE 4 FT ON EACH SIDE.
7. ➡ DIRECTION OF AIR FLOW.
8. "L" & "S" DESIGNATIONS DENOTE LOCATION OF COMMON CROSS RAIL. (POSITION "L" FOR LARGE DUCT OPENING CURB).

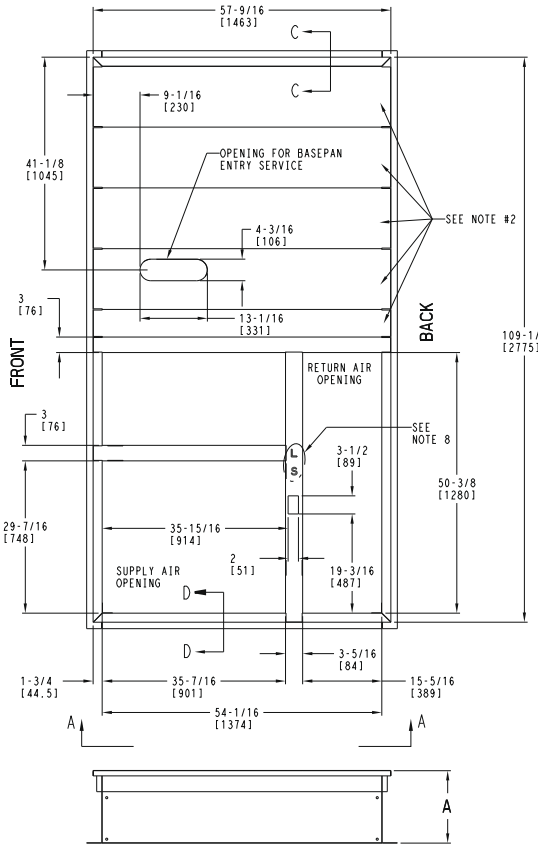

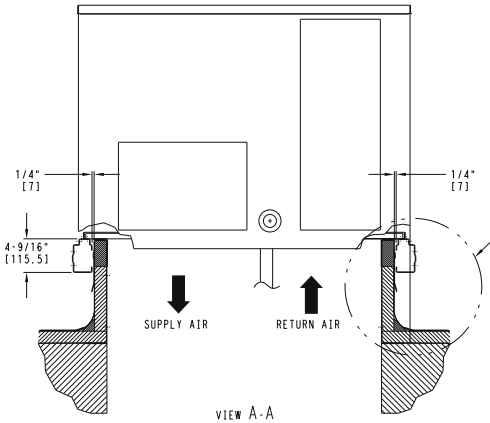

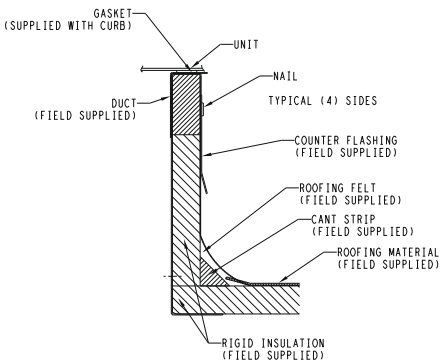

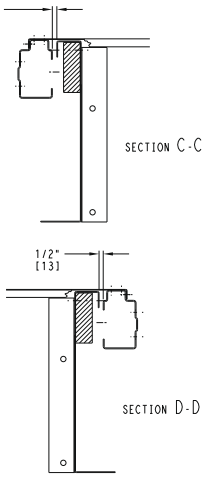

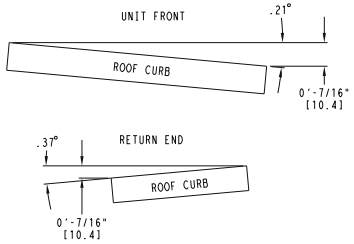

MAX CURB LEVELING TOLERANCES

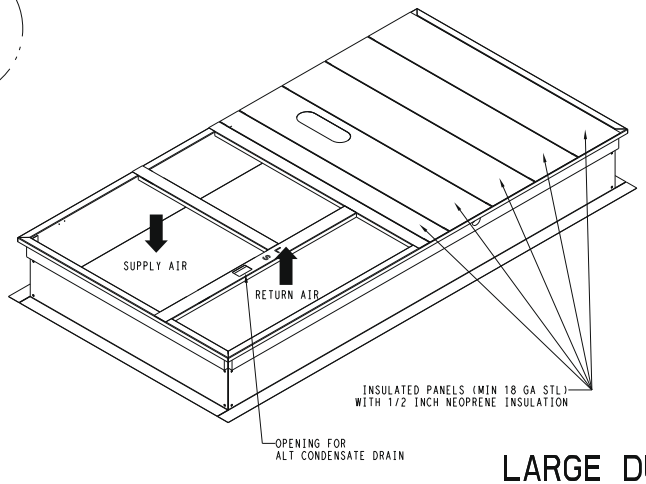

LARGE DUCT OPENINGS

50TM500780	REV B

48/50GC**07 Two Stage Cooling Capacities

48/50GC**07				AMBIENT TEMPERATURE (°F)														
				85			95			105			115			125		
				EAT (db)			EAT (db)			EAT (db)			EAT (db)			EAT (db)		
				75	80	85	75	80	85	75	80	85	75	80	85	75	80	85
1800 cfm	EAT (wb)	58	TC	64.3	64.3	68.3	60.0	60.0	68.1	56.9	56.9	64.6	53.5	53.5	60.9	50.0	50.0	57.0
			SHC	53.3	60.8	68.3	52.0	60.0	68.1	49.2	56.9	64.6	46.2	53.5	60.9	43.0	50.0	57.0
		62	TC	67.4	67.4	67.4	63.6	63.6	64.5	59.6	59.6	62.4	55.4	55.4	60.0	51.0	51.0	57.4
			SHC	48.9	57.8	66.6	46.9	55.7	64.5	44.7	53.5	62.4	42.3	51.2	60.0	39.9	48.7	57.4
		67	TC	74.4	74.4	74.4	70.4	70.4	70.4	66.1	66.1	66.1	61.6	61.6	61.6	56.8	56.8	56.8
			SHC	40.4	49.1	57.9	38.3	47.1	55.9	36.1	45.0	53.8	33.9	42.8	51.6	31.6	40.5	49.4
		72	TC	82.3	82.3	82.3	78.0	78.0	78.0	73.4	73.4	73.4	68.4	68.4	68.4	63.3	63.3	63.3
			SHC	31.9	40.3	48.6	29.8	38.3	46.8	27.6	36.2	44.8	25.3	34.0	42.7	23.0	31.7	40.5
		76	TC	—	89.2	89.2	—	84.7	84.7	—	79.6	79.6	—	74.4	74.4	—	68.8	68.8
			SHC	—	32.7	42.6	—	30.6	40.5	—	28.9	38.8	—	26.8	34.2	—	24.6	32.8
2100 cfm	EAT (wb)	58	TC	66.8	66.8	75.6	63.6	63.6	72.0	60.2	60.2	68.3	56.6	56.6	64.4	52.8	52.8	60.2
			SHC	58.0	66.8	75.6	55.1	63.6	72.0	52.1	60.2	68.3	48.9	56.6	64.4	45.5	52.8	60.2
		62	TC	69.7	69.7	73.1	65.7	65.7	70.8	61.6	61.6	68.4	57.3	57.3	65.6	54.1	54.1	58.9
			SHC	52.9	63.0	73.1	50.6	60.7	70.8	48.3	58.4	68.4	45.7	55.7	65.6	41.4	50.1	58.9
		67	TC	76.9	76.9	76.9	72.6	72.6	72.6	68.1	68.1	68.1	63.4	63.4	63.4	58.4	58.4	58.4
			SHC	43.0	53.1	63.3	40.9	51.0	61.2	38.7	48.9	59.1	36.4	46.6	56.9	34.0	44.3	54.5
		72	TC	84.9	84.9	84.9	80.3	80.3	80.3	75.4	75.4	75.4	70.3	70.3	70.3	64.9	64.9	64.9
			SHC	33.0	42.9	52.7	30.8	40.8	50.8	28.6	38.6	48.7	26.3	36.4	46.5	23.9	34.1	44.3
		76	TC	—	91.8	91.8	—	87.0	87.0	—	81.7	81.7	—	76.2	76.2	—	70.5	70.5
			SHC	—	34.3	45.8	—	32.4	40.3	—	30.3	39.4	—	28.1	37.6	—	25.8	35.6
2400 cfm	EAT (wb)	58	TC	69.9	69.9	79.1	66.6	66.6	75.4	63.0	63.0	71.4	59.2	59.2	67.3	55.2	55.2	62.8
			SHC	60.8	69.9	79.1	57.8	66.6	75.4	54.6	63.0	71.4	51.2	59.2	67.3	47.6	55.2	62.8
		62	TC	71.5	71.5	79.0	67.4	67.4	76.3	63.4	63.4	73.0	59.9	59.9	68.3	55.3	55.3	65.5
			SHC	56.3	67.7	79.0	53.9	65.1	76.3	51.1	62.1	73.0	47.7	58.0	68.3	45.2	55.3	65.5
		67	TC	78.8	78.8	78.8	74.4	74.4	74.4	69.7	69.7	69.7	64.8	64.8	64.8	59.7	59.7	59.7
			SHC	45.4	56.9	68.3	43.2	54.7	66.3	41.0	52.5	64.1	38.7	50.2	61.8	36.3	47.9	59.4
		72	TC	86.8	86.8	86.8	82.0	82.0	82.0	77.0	77.0	77.0	71.7	71.7	71.7	66.2	66.2	66.2
			SHC	33.9	45.2	56.4	31.7	43.1	54.4	29.5	40.9	52.3	27.2	38.6	50.1	24.8	36.3	47.8
		76	TC	—	93.8	93.8	—	88.7	88.7	—	83.3	83.3	—	77.7	77.7	—	71.7	71.7
			SHC	—	35.6	45.6	—	33.6	44.0	—	31.4	42.2	—	29.2	40.2	—	26.8	38.1
2700 cfm	EAT (wb)	58	TC	72.6	72.6	82.1	69.1	69.1	78.3	65.4	65.4	74.1	61.5	61.5	69.8	57.3	57.3	65.1
			SHC	63.2	72.6	82.1	60.0	69.1	78.3	56.7	65.4	74.1	53.2	61.5	69.8	49.4	57.3	65.1
		62	TC	73.2	73.2	83.5	70.2	70.2	78.6	67.2	67.2	70.8	61.5	61.5	72.6	57.3	57.3	67.8
			SHC	59.2	71.3	83.5	55.8	67.2	78.6	50.9	60.8	70.8	50.4	61.5	72.6	46.8	57.3	67.8
		67	TC	80.3	80.3	80.3	75.8	75.8	75.8	71.0	71.0	71.0	65.9	65.9	66.5	60.6	60.6	64.0
			SHC	47.6	60.4	73.2	45.5	58.3	71.1	43.2	56.0	68.8	40.9	53.7	66.5	38.5	51.2	64.0
		72	TC	88.3	88.3	88.3	83.4	83.4	83.4	78.3	78.3	78.3	72.8	72.8	72.8	67.1	67.1	67.1
			SHC	34.7	47.3	59.9	32.5	45.2	57.8	30.3	43.0	55.7	28.0	40.7	53.4	25.5	38.3	51.0
		76	TC	—	95.6	95.6	—	90.1	90.1	—	84.6	84.6	—	78.8	78.8	—	—	—
			SHC	—	36.7	48.5	—	34.6	46.6	—	32.4	44.6	—	30.1	42.5	—	—	—
3000 cfm	EAT (wb)	58	TC	75.0	75.0	84.8	71.3	71.3	80.7	67.5	67.5	76.4	63.4	63.4	71.9	59.0	59.0	67.1
			SHC	65.2	75.0	84.8	61.9	71.3	80.7	58.5	67.5	76.4	54.9	63.4	71.9	51.0	59.0	67.1
		62	TC	76.4	76.4	82.9	72.1	72.1	81.5	67.5	67.5	79.5	63.4	63.4	74.8	59.1	59.1	69.9
			SHC	59.5	71.2	82.9	57.7	69.6	81.5	55.6	67.5	79.5	52.0	63.4	74.8	48.3	59.1	69.9
		67	TC	81.6	81.6	81.6	76.9	76.9	76.9	72.0	72.0	73.3	66.8	66.8	70.9	61.9	61.9	70.1
			SHC	49.8	63.8	77.8	47.6	61.6	75.6	45.3	59.3	73.3	43.0	56.9	70.9	41.3	55.7	70.1
		72	TC	89.6	89.6	89.6	84.6	84.6	84.6	79.3	79.3	79.3	73.7	73.7	73.7	67.9	67.9	67.9
			SHC	35.5	49.3	63.2	33.3	47.2	61.1	31.0	44.9	58.9	28.6	42.6	56.6	26.2	40.2	54.2
		76	TC	—	96.6	96.6	—	91.3	91.3	—	85.6	85.6	—	—	—	—	—	—
			SHC	—	37.6	50.8	—	35.5	48.9	—	33.2	46.8	—	—	—	—	—	—

LEGEND

— — Do Not Operate
cfm — Cubic Feet Per Minute (Supply Air)
EAT (db) — Entering Air Temperature (dry bulb)
EAT (wb) — Entering Air Temperature (wet bulb)
SHC — Sensible Heat Capacity (1000 Btuh) Gross
TC — Total Capacity (1000 Btuh) Gross

NOTE: See minimum-maximum airflow ratings on page 8.

48/50GC**07 Single Stage Cooling Capacities

48/50GC**07				AMBIENT TEMPERATURE (°F)														
				85			95			105			115			125		
				EAT (db)			EAT (db)			EAT (db)			EAT (db)			EAT (db)		
				75	80	85	75	80	85	75	80	85	75	80	85	75	80	85
1150 cfm	EAT (wb)	58	TC	38.6	38.6	43.8	36.5	36.5	41.6	34.3	34.3	39.2	32.0	32.0	36.6	29.5	29.5	33.9
			SHC	33.4	38.6	43.8	31.5	36.5	41.6	29.5	34.3	39.2	27.4	32.0	36.6	25.2	29.5	33.9
		62	TC	41.1	41.1	41.6	38.5	38.5	40.0	35.7	35.7	38.4	32.9	32.9	36.7	29.9	29.9	34.8
			SHC	30.1	35.8	41.6	28.5	34.3	40.0	26.9	32.7	38.4	25.3	31.0	36.7	23.5	29.2	34.8
		67	TC	45.8	45.8	45.8	43.0	43.0	43.0	40.0	40.0	40.0	36.9	36.9	36.9	33.7	33.7	33.7
			SHC	24.7	30.4	36.1	23.2	28.9	34.6	21.6	27.3	33.0	20.0	25.7	31.4	18.3	24.0	29.8
		72	TC	50.8	50.8	50.8	47.8	47.8	47.8	44.7	44.7	44.7	41.3	41.3	41.3	37.8	37.8	37.8
			SHC	19.4	24.9	30.4	17.8	23.4	28.9	16.2	21.8	27.4	14.5	20.2	25.9	12.8	18.5	24.2
		76	TC	—	55.2	55.2	—	52.0	52.0	—	48.6	48.6	—	45.1	45.1	—	41.4	41.4
			SHC	—	20.1	26.3	—	18.8	25.0	—	17.3	22.1	—	15.7	20.9	—	14.0	19.5
1350 cfm	EAT (wb)	58	TC	41.3	41.3	46.8	39.0	39.0	44.3	36.7	36.7	41.8	34.2	34.2	39.0	31.5	31.5	36.1
			SHC	35.7	41.3	46.8	33.7	39.0	44.3	31.5	36.7	41.8	29.3	34.2	39.0	26.9	31.5	36.1
		62	TC	42.7	42.7	46.2	40.0	40.0	44.5	37.1	37.1	42.7	34.4	34.4	40.3	31.6	31.6	37.7
			SHC	32.9	39.5	46.2	31.3	37.9	44.5	29.5	36.1	42.7	27.5	33.9	40.3	25.4	31.6	37.7
		67	TC	47.4	47.4	47.4	44.5	44.5	44.5	41.4	41.4	41.4	38.1	38.1	38.1	34.7	34.7	34.7
			SHC	26.6	33.3	39.9	25.0	31.7	38.4	23.4	30.1	36.8	21.7	28.4	35.1	20.0	26.7	33.4
		72	TC	52.5	52.5	52.5	49.4	49.4	49.4	46.1	46.1	46.1	42.6	42.6	42.6	38.9	38.9	38.9
			SHC	20.2	26.7	33.2	18.6	25.2	31.7	17.0	23.6	30.2	15.3	21.9	28.6	13.6	20.2	26.9
		76	TC	—	56.9	56.9	—	53.6	53.6	—	50.1	50.1	—	—	—	—	—	—
			SHC	—	21.4	27.0	—	19.8	25.9	—	18.3	24.5	—	—	—	—	—	—
1600 cfm	EAT (wb)	58	TC	43.2	43.2	49.0	40.9	40.9	46.4	38.4	38.4	43.7	35.8	35.8	40.8	33.0	33.0	37.8
			SHC	37.5	43.2	49.0	35.3	40.9	46.4	33.1	38.4	43.7	30.7	35.8	40.8	28.2	33.0	37.8
		62	TC	43.8	43.8	49.8	41.1	41.1	47.7	38.6	38.6	44.9	35.8	35.8	42.6	33.0	33.0	39.4
			SHC	35.1	42.4	49.8	33.2	40.4	47.7	31.0	38.0	44.9	29.1	35.8	42.6	26.7	33.0	39.4
		67	TC	48.5	48.5	48.5	45.5	45.5	45.5	42.3	42.3	42.3	38.9	38.9	38.9	35.4	35.4	36.5
			SHC	28.1	35.6	43.1	26.5	34.0	41.5	24.9	32.4	39.9	23.2	30.7	38.3	21.5	29.0	36.5
		72	TC	53.7	53.7	53.7	50.4	50.4	50.4	47.0	47.0	47.0	43.4	43.4	43.4	39.6	39.6	39.6
			SHC	20.9	28.2	35.6	19.2	26.6	34.1	17.6	25.0	32.5	15.9	23.4	30.8	14.1	21.6	29.1
		76	TC	—	58.1	58.1	—	54.6	54.6	—	—	—	—	—	—	—	—	—
			SHC	—	22.2	29.1	—	20.6	27.7	—	—	—	—	—	—	—	—	—
1800 cfm	EAT (wb)	58	TC	45.1	45.1	51.1	42.6	42.6	48.4	40.1	40.1	45.6	37.3	37.3	42.5	34.4	34.4	39.3
			SHC	39.1	45.1	51.1	36.9	42.6	48.4	34.6	40.1	45.6	32.1	37.3	42.5	29.5	34.4	39.3
		62	TC	45.8	45.8	51.2	42.7	42.7	50.4	40.1	40.1	47.4	37.3	37.3	44.3	34.4	34.4	41.0
			SHC	36.2	43.7	51.2	35.0	42.7	50.4	32.7	40.1	47.4	30.3	37.3	44.3	27.8	34.4	41.0
		67	TC	49.6	49.6	49.6	46.4	46.4	46.4	43.2	43.2	43.4	39.7	39.7	41.7	36.1	36.1	39.9
			SHC	29.8	38.2	46.6	28.2	36.6	45.0	26.5	35.0	43.4	24.8	33.2	41.7	23.0	31.4	39.9
		72	TC	54.7	54.7	54.7	51.4	51.4	51.4	47.8	47.8	47.8	44.2	44.2	44.2	40.3	40.3	40.3
			SHC	21.5	29.9	38.2	19.9	28.3	36.6	18.2	26.6	35.0	16.5	24.9	33.3	14.8	23.2	31.6
		76	TC	—	—	—	—	—	—	—	—	—	—	—	—	—	—	—
			SHC	—	—	—	—	—	—	—	—	—	—	—	—	—	—	—
2050 cfm	EAT (wb)	58	TC	46.6	46.6	52.7	44.0	44.0	49.9	41.3	41.3	47.0	38.5	38.5	43.8	35.4	35.4	40.5
			SHC	40.4	46.6	52.7	38.1	44.0	49.9	35.7	41.3	47.0	33.1	38.5	43.8	30.4	35.4	40.5
		62	TC	46.6	46.6	54.9	44.1	44.1	52.0	41.3	41.3	48.9	38.5	38.5	45.7	35.5	35.5	42.3
			SHC	38.4	46.6	54.9	36.2	44.1	52.0	33.8	41.3	48.9	31.3	38.5	45.7	28.7	35.5	42.3
		67	TC	50.3	50.3	50.3	47.1	47.1	48.0	43.7	43.7	46.3	40.2	40.2	44.5	36.6	36.6	42.6
			SHC	31.2	40.4	49.6	29.6	38.8	48.0	27.9	37.1	46.3	26.1	35.3	44.5	24.3	33.5	42.6
		72	TC	55.5	55.5	55.5	52.1	52.1	52.1	48.4	48.4	48.4	44.7	44.7	44.7	40.7	40.7	40.7
			SHC	22.1	31.2	40.3	20.5	29.6	38.8	18.8	27.9	37.1	17.0	26.2	35.4	15.3	24.5	33.6
		76	TC	—	—	—	—	—	—	—	—	—	—	—	—	—	—	—
			SHC	—	—	—	—	—	—	—	—	—	—	—	—	—	—	—

NOTE: See minimum-maximum airflow ratings on page 8.

LEGEND

— — Do Not Operate
cfm — Cubic Feet Per Minute (Supply Air)
EAT (db) — Entering Air Temperature (dry bulb)
EAT (wb) — Entering Air Temperature (wet bulb)
SHC — Sensible Heat Capacity (1000 Btuh) Gross
TC — Total Capacity (1000 Btuh) Gross

48/50GC*N07 — Unit with Humidi-MiZer® System in Subcooling Mode — Cooling Capacities

TEMP (°F) AIR ENTERING CONDENSER (Edb)		AIR ENTERING EVAPORATOR — SCFM/BF (80°F db)								
		1800/0.12			2400 /0.15			3000/0.20		
		Air Entering Evaporator — Ewb (°F)								
		72	67	62	72	67	62	72	67	62
75	TC	74.0	67.0	59.0	81.0	72.0	64.0	85.0	75.0	67.0
	SHC	28.0	37.0	45.0	35.0	45.0	55.0	40.0	53.0	64.0
	kW	3.8	3.7	3.7	3.8	3.7	3.7	3.8	3.7	3.7
85	TC	71.0	63.0	55.0	76.0	68.0	60.0	80.0	71.0	63.0
	SHC	25.0	33.0	41.0	31.0	41.0	52.0	36.0	48.0	60.0
	kW	4.2	4.2	4.1	4.3	4.2	4.2	4.3	4.2	4.2
95	TC	67.0	59.0	52.0	72.0	63.0	56.0	75.0	66.0	59.0
	SHC	21.0	30.0	38.0	27.0	37.0	48.0	31.0	44.0	56.0
	kW	4.8	4.7	4.7	4.8	4.8	4.7	4.8	4.8	4.7
105	TC	63.0	55.0	48.0	67.0	59.0	52.0	70.0	62.0	55.0
	SHC	18.0	26.0	35.0	22.0	34.0	44.0	27.0	40.0	52.0
	kW	5.4	5.3	5.3	5.4	5.4	5.3	5.5	5.4	5.4
115	TC	58.0	51.0	44.0	62.0	54.0	48.0	64.0	57.0	50.0
	SHC	13.0	22.0	31.0	18.0	29.0	41.0	22.0	36.0	48.0
	kW	6.1	6.0	6.0	6.1	6.1	6.0	6.2	6.1	6.0
125	TC	53.0	46.0	40.0	56.0	49.0	43.0	59.0	52.0	46.0
	SHC	9.0	18.0	27.0	13.0	25.0	37.0	17.0	32.0	44.0
	kW	6.9	6.8	6.8	6.9	6.9	6.8	6.9	6.9	6.8

48/50GC*N07 — Unit with Humidi-MiZer System in Hot Gas Reheat Mode — Cooling Capacities

TEMP (°F) AIR ENTERING CONDENSER (Edb)		AIR ENTERING EVAPORATOR — Ewb (°F)								
		75 Dry Bulb 62.5 Wet Bulb (50% Relative)			75 Dry Bulb 64 Wet Bulb (56% Relative)			75 Dry Bulb 65.3 Wet Bulb (60% Relative)		
		Air Entering Evaporator — cfm								
		1800	2400	3000	1800	2400	3000	1800	2400	3000
80	TC	32.5	35.1	36.7	33.6	36.2	37.9	34.5	37.2	38.9
	SHC	6.7	12.9	19.0	3.0	8.3	13.5	–0.1	4.4	8.9
	kW	3.8	3.7	3.7	3.8	3.7	3.7	3.8	3.7	3.7
75	TC	33.6	36.3	38.1	34.8	37.6	39.3	35.8	38.6	40.3
	SHC	7.9	14.1	20.3	4.3	9.6	14.9	1.1	5.7	10.3
	kW	3.8	3.7	3.7	3.8	3.7	3.7	3.8	3.7	3.7
70	TC	34.7	37.6	39.3	36.0	38.9	40.7	37.1	40.0	41.8
	SHC	9.0	15.4	21.5	5.5	10.9	16.2	2.4	7.0	11.6
	kW	3.8	3.7	3.7	3.8	3.7	3.7	3.8	3.7	3.7
60	TC	36.9	39.9	41.8	38.3	41.3	43.3	39.4	42.6	44.4
	SHC	11.2	17.7	23.9	7.8	13.4	18.8	4.7	9.6	14.2
	kW	3.8	3.7	3.7	3.8	3.7	3.7	3.8	3.7	3.7
50	TC	38.9	42.2	44.1	40.3	43.6	45.6	41.7	44.9	46.9
	SHC	13.3	20.0	26.2	9.8	15.6	21.1	6.9	11.9	16.7
	kW	3.8	3.7	3.7	3.8	3.7	3.7	3.8	3.7	3.7
40	TC	40.8	44.0	46.1	42.4	45.7	47.8	43.7	47.1	49.2
	SHC	15.1	21.9	28.3	11.9	17.7	23.3	9.0	14.1	19.0
	kW	3.8	3.7	3.7	3.8	3.7	3.7	3.8	3.7	3.7

LEGEND

Edb — Entering Dry Bulb
Ewb — Entering Wet Bulb
kW — Compressor Power Input
SCFM/BF — Standard Cubic Feet per Minute/Bypass Factor
SHC — Sensible Heat Capacity (1000 Btuh) Gross
TC — Total Capacity (1000 Btuh) Gross

48/50GC**08 Two Stage Cooling Capacities

48/50GC**08				AMBIENT TEMPERATURE (°F)														
				85			95			105			115			125		
				EAT (db)			EAT (db)			EAT (db)			EAT (db)			EAT (db)		
				75	80	85	75	80	85	75	80	85	75	80	85	75	80	85
2250 cfm	EAT (wb)	58	TC	81.9	81.9	92.7	78.3	78.3	88.8	74.3	74.3	84.4	69.9	69.9	79.5	64.9	64.9	73.9
			SHC	71.1	81.9	92.7	67.8	78.3	88.8	64.2	74.3	84.4	60.3	69.9	79.5	55.8	64.9	73.9
		62	TC	87.3	87.3	87.3	82.7	82.7	84.5	77.7	77.7	81.8	72.1	72.1	78.7	65.9	65.9	75.3
			SHC	63.7	75.4	87.0	61.2	72.8	84.5	58.4	70.1	81.8	55.4	67.1	78.7	52.1	63.7	75.3
		67	TC	96.7	96.7	96.7	91.8	91.8	91.8	86.4	86.4	86.4	80.4	80.4	80.4	73.7	73.7	73.7
			SHC	52.3	63.9	75.5	49.8	61.4	73.0	47.1	58.7	70.4	44.1	55.8	67.5	40.9	52.7	64.4
		72	TC	107.2	107.2	107.2	102.0	102.0	102.0	96.2	96.2	96.2	89.7	89.7	89.7	82.5	82.5	82.5
			SHC	41.0	52.3	63.5	38.4	49.8	61.1	35.7	47.1	58.5	32.7	44.2	55.7	29.5	41.1	52.6
		76	TC	—	116.5	116.5	—	110.9	110.9	—	104.7	104.7	—	97.8	97.8	—	90.1	90.1
			SHC	—	42.5	54.9	—	40.1	52.5	—	37.6	50.0	—	34.8	45.2	—	31.7	42.7
2650 cfm	EAT (wb)	58	TC	87.3	87.3	98.8	83.4	83.4	94.5	79.1	79.1	89.8	74.4	74.4	84.5	69.0	69.0	78.6
			SHC	75.8	87.3	98.8	72.3	83.4	94.5	68.5	79.1	89.8	64.2	74.4	84.5	59.5	69.0	78.6
		62	TC	90.6	90.6	96.6	85.8	85.8	93.8	80.6	80.6	90.9	76.4	76.4	83.3	70.1	70.1	79.6
			SHC	69.5	83.1	96.6	66.8	80.3	93.8	63.9	77.4	90.9	58.8	71.1	83.3	55.3	67.5	79.6
		67	TC	100.3	100.3	100.3	95.1	95.1	95.1	89.4	89.4	89.4	83.1	83.1	83.1	76.0	76.0	76.0
			SHC	56.2	69.7	83.3	53.6	67.2	80.8	50.8	64.4	78.1	47.8	61.5	75.1	44.6	58.3	72.0
		72	TC	111.0	111.0	111.0	105.5	105.5	105.5	99.3	99.3	99.3	92.5	92.5	92.5	85.0	85.0	85.0
			SHC	42.8	56.1	69.4	40.1	53.5	66.9	37.3	50.8	64.2	34.3	47.8	61.3	31.0	44.6	58.2
		76	TC	—	120.4	120.4	—	114.5	114.5	—	108.0	108.0	—	100.7	100.7	—	92.7	92.7
			SHC	—	44.9	55.8	—	42.4	54.5	—	39.7	52.3	—	36.8	49.7	—	33.6	46.8
3000 cfm	EAT (wb)	58	TC	91.3	91.3	103.3	87.2	87.2	98.8	82.7	82.7	93.8	77.7	77.7	88.2	72.1	72.1	82.0
			SHC	79.3	91.3	103.3	75.7	87.2	98.8	71.6	82.7	93.8	67.1	77.7	88.2	62.1	72.1	82.0
		62	TC	93.0	93.0	104.2	88.0	88.0	100.8	83.7	83.7	95.3	79.3	79.3	87.7	72.1	72.1	85.4
			SHC	74.0	89.1	104.2	71.0	85.9	100.8	66.9	81.1	95.3	61.8	74.8	87.7	58.9	72.1	85.4
		67	TC	102.7	102.7	102.7	97.3	97.3	97.3	91.4	91.4	91.4	84.9	84.9	84.9	77.6	77.6	78.3
			SHC	59.3	74.6	89.9	56.7	72.0	87.3	53.9	69.2	84.5	50.9	66.2	81.6	47.6	63.0	78.3
		72	TC	113.6	113.6	113.6	107.8	107.8	107.8	101.5	101.5	101.5	94.4	94.4	94.4	86.6	86.6	86.6
			SHC	44.1	59.1	74.2	41.4	56.5	71.6	38.6	53.8	68.9	35.5	50.8	66.0	32.3	47.5	62.8
		76	TC	—	123.1	123.1	—	117.0	117.0	—	110.2	110.2	—	102.7	102.7	—	—	—
			SHC	—	46.6	60.5	—	44.0	58.3	—	41.3	55.8	—	38.3	53.1	—	—	—
3400 cfm	EAT (wb)	58	TC	95.2	95.2	107.7	90.9	90.9	102.9	86.2	86.2	97.7	80.9	80.9	91.8	75.0	75.0	85.3
			SHC	82.8	95.2	107.7	78.9	90.9	102.9	74.7	86.2	97.7	70.0	80.9	91.8	64.7	75.0	85.3
		62	TC	96.5	96.5	109.7	91.9	91.9	105.2	86.3	86.3	101.7	81.0	81.0	95.6	75.1	75.1	88.8
			SHC	77.8	93.8	109.7	74.2	89.7	105.2	71.0	86.3	101.7	66.4	81.0	95.6	61.4	75.1	88.8
		67	TC	104.9	104.9	104.9	99.3	99.3	99.3	93.2	93.2	93.2	86.5	86.5	88.7	79.0	79.0	85.2
			SHC	62.8	79.9	97.1	60.1	77.3	94.5	57.3	74.5	91.7	54.2	71.4	88.7	50.9	68.1	85.2
		72	TC	115.9	115.9	115.9	110.0	110.0	110.0	103.4	103.4	103.4	96.1	96.1	96.1	88.1	88.1	88.1
			SHC	45.5	62.5	79.4	42.8	59.8	76.8	39.9	57.0	74.1	36.9	54.0	71.1	33.6	50.7	67.9
		76	TC	—	125.5	125.5	—	119.2	119.2	—	112.2	112.2	—	—	—	—	—	—
			SHC	—	48.4	64.5	—	45.7	62.1	—	42.9	59.5	—	—	—	—	—	—
3750 cfm	EAT (wb)	58	TC	98.2	98.2	111.0	93.8	93.8	106.1	88.8	88.8	100.7	83.4	83.4	94.6	77.3	77.3	87.8
			SHC	85.4	98.2	111.0	81.4	93.8	106.1	77.0	88.8	100.7	72.2	83.4	94.6	66.7	77.3	87.8
		62	TC	100.4	100.4	109.1	93.9	93.9	110.3	89.0	89.0	104.8	83.5	83.5	98.5	77.4	77.4	91.4
			SHC	78.3	93.7	109.1	77.4	93.9	110.3	73.2	89.0	104.8	68.5	83.5	98.5	63.3	77.4	91.4
		67	TC	106.5	106.5	106.5	100.8	100.8	100.8	94.5	94.5	97.7	87.6	87.6	94.6	80.1	80.1	91.0
			SHC	65.7	84.5	103.3	63.0	81.8	100.6	60.1	78.9	97.7	57.0	75.8	94.6	53.6	72.3	91.0
		72	TC	117.6	117.6	117.6	111.5	111.5	111.5	104.8	104.8	104.8	97.3	97.3	97.3	89.2	89.2	89.2
			SHC	46.6	65.3	83.9	43.9	62.6	81.3	41.1	59.8	78.5	38.0	56.7	75.5	34.6	53.4	72.2
		76	TC	—	127.3	127.3	—	120.8	120.8	—	—	—	—	—	—	—	—	—
			SHC	—	49.8	67.7	—	47.1	65.2	—	—	—	—	—	—	—	—	—

LEGEND

— — Do Not Operate
cfm — Cubic Feet Per Minute (Supply Air)
EAT (db) — Entering Air Temperature (dry bulb)
EAT (wb) — Entering Air Temperature (wet bulb)
SHC — Sensible Heat Capacity (1000 Btuh) Gross
TC — Total Capacity (1000 Btuh) Gross

NOTE: See minimum-maximum airflow ratings on page 8.

48/50GC**08 Single Stage Cooling Capacities

48/50GC**08				AMBIENT TEMPERATURE (°F)														
				85			95			105			115			125		
				EAT (db)			EAT (db)			EAT (db)			EAT (db)			EAT (db)		
				75	80	85	75	80	85	75	80	85	75	80	85	75	80	85
1150 cfm	EAT (wb)	58	TC	45.9	45.9	50.4	42.9	42.9	48.2	39.9	39.9	45.5	36.7	36.7	42.5	33.3	33.3	38.8
			SHC	38.2	44.3	50.4	36.0	42.1	48.2	33.6	39.6	45.5	30.9	36.7	42.5	27.8	33.3	38.8
		62	TC	50.5	50.5	50.5	47.3	47.3	47.3	43.9	43.9	43.9	40.1	40.1	40.1	35.9	35.9	37.0
			SHC	34.0	40.2	46.3	31.9	38.0	44.1	29.7	35.8	41.9	27.3	33.4	39.5	24.7	30.8	37.0
		67	TC	56.9	56.9	56.9	53.5	53.5	53.5	49.9	49.9	49.9	45.9	45.9	45.9	41.3	41.3	41.3
			SHC	28.7	34.8	40.8	26.5	32.6	38.7	24.3	30.4	36.5	21.9	28.0	34.1	19.3	25.4	31.5
		72	TC	63.7	63.7	63.7	60.2	60.2	60.2	56.4	56.4	56.4	52.2	52.2	52.2	47.4	47.4	47.4
			SHC	23.4	29.2	35.0	21.2	27.1	32.9	18.9	24.9	30.8	16.5	22.5	28.5	13.9	20.0	26.0
		76	TC	—	69.6	69.6	—	65.9	65.9	—	62.2	62.2	—	57.7	57.7	—	52.6	52.6
			SHC	—	25.0	31.3	—	22.7	29.0	—	20.4	26.7	—	18.0	24.3	—	15.5	21.8
1350 cfm	EAT (wb)	58	TC	48.9	48.9	55.8	46.1	46.1	52.8	43.2	43.2	49.6	40.0	40.0	46.2	36.4	36.4	42.2
			SHC	42.0	48.9	55.8	39.5	46.1	52.8	36.8	43.2	49.6	33.8	40.0	46.2	30.5	36.4	42.2
		62	TC	53.2	53.2	53.2	49.8	49.8	49.8	46.1	46.1	47.3	42.2	42.2	44.8	37.7	37.7	42.1
			SHC	37.5	44.6	51.8	35.2	42.4	49.6	32.9	40.1	47.3	30.5	37.6	44.8	27.8	35.0	42.1
		67	TC	59.7	59.7	59.7	56.1	56.1	56.1	52.3	52.3	52.3	48.1	48.1	48.1	43.3	43.3	43.3
			SHC	31.1	38.2	45.3	28.9	36.0	43.1	26.5	33.7	40.8	24.1	31.2	38.4	21.4	28.6	35.8
		72	TC	66.8	66.8	66.8	63.0	63.0	63.0	59.0	59.0	59.0	54.5	54.5	54.5	49.5	49.5	49.5
			SHC	24.7	31.6	38.5	22.4	29.4	36.3	20.1	27.1	34.1	17.6	24.7	31.7	15.0	22.1	29.2
		76	TC	—	73.0	73.0	—	69.2	69.2	—	65.0	65.0	—	60.2	60.2	—	54.8	54.8
			SHC	—	26.1	33.5	—	23.9	31.3	—	21.7	29.2	—	19.4	25.5	—	16.8	23.4
1500 cfm	EAT (wb)	58	TC	51.4	51.4	58.6	48.5	48.5	55.5	45.5	45.5	52.2	42.1	42.1	48.5	38.3	38.3	44.4
			SHC	44.3	51.4	58.6	41.6	48.5	55.5	38.8	45.5	52.2	35.7	42.1	48.5	32.3	38.3	44.4
		62	TC	54.8	54.8	55.7	51.2	51.2	53.5	47.6	47.6	51.2	43.4	43.4	48.6	38.8	38.8	45.8
			SHC	39.9	47.8	55.7	37.7	45.6	53.5	35.3	43.2	51.2	32.8	40.7	48.6	30.0	37.9	45.8
		67	TC	61.4	61.4	61.4	57.7	57.7	57.7	53.8	53.8	53.8	49.3	49.3	49.3	44.5	44.5	44.5
			SHC	32.7	40.6	48.4	30.5	38.3	46.2	28.2	36.1	44.0	25.6	33.5	41.5	22.9	30.9	38.8
		72	TC	68.7	68.7	68.7	64.8	64.8	64.8	60.6	60.6	60.6	56.0	56.0	56.0	50.7	50.7	50.7
			SHC	25.5	33.2	40.9	23.2	31.0	38.7	20.9	28.7	36.5	18.4	26.2	34.0	15.7	23.6	31.4
		76	TC	—	75.0	75.0	—	71.0	71.0	—	66.7	66.7	—	61.7	61.7	—	—	—
			SHC	—	27.1	35.4	—	25.0	33.2	—	22.7	29.7	—	20.3	27.6	—	—	—
1700 cfm	EAT (wb)	58	TC	54.3	54.3	61.8	51.3	51.3	58.6	48.1	48.1	55.1	44.6	44.6	51.3	40.6	40.6	47.0
			SHC	46.9	54.3	61.8	44.1	51.3	58.6	41.1	48.1	55.1	37.9	44.6	51.3	34.3	40.6	47.0
		62	TC	56.6	56.6	60.8	52.9	52.9	58.4	49.1	49.1	56.0	44.9	44.9	53.1	40.7	40.7	49.2
			SHC	43.0	51.9	60.8	40.7	49.5	58.4	38.2	47.1	56.0	35.5	44.3	53.1	32.3	40.7	49.2
		67	TC	63.3	63.3	63.3	59.4	59.4	59.4	55.4	55.4	55.4	50.8	50.8	50.8	45.7	45.7	45.7
			SHC	34.8	43.7	52.5	32.5	41.4	50.3	30.1	39.1	48.0	27.6	36.5	45.5	24.9	33.8	42.8
		72	TC	70.7	70.7	70.7	66.6	66.6	66.6	62.3	62.3	62.3	57.5	57.5	57.5	52.1	52.1	52.1
			SHC	26.5	35.3	44.0	24.2	33.0	41.8	21.8	30.7	39.5	19.3	28.2	37.0	16.6	25.5	34.3
		76	TC	—	77.1	77.1	—	73.0	73.0	—	68.3	68.3	—	—	—	—	—	—
			SHC	—	28.4	36.2	—	26.2	34.3	—	23.9	32.2	—	—	—	—	—	—
1900 cfm	EAT (wb)	58	TC	56.9	56.9	64.7	53.7	53.7	61.3	50.4	50.4	57.7	46.8	46.8	53.7	42.6	42.6	49.2
			SHC	49.1	56.9	64.7	46.2	53.7	61.3	43.2	50.4	57.7	39.8	46.8	53.7	36.1	42.6	49.2
		62	TC	58.1	58.1	65.5	54.4	54.4	62.8	50.9	50.9	59.5	46.8	46.8	56.1	42.7	42.7	51.5
			SHC	45.8	55.6	65.5	43.3	53.1	62.8	40.5	50.0	59.5	37.6	46.8	56.1	34.0	42.7	51.5
		67	TC	64.8	64.8	64.8	60.9	60.9	60.9	56.6	56.6	56.6	52.0	52.0	52.0	46.7	46.7	46.7
			SHC	36.7	46.6	56.5	34.4	44.3	54.2	32.0	41.9	51.9	29.5	39.4	49.4	26.7	36.7	46.6
		72	TC	72.4	72.4	72.4	68.2	68.2	68.2	63.7	63.7	63.7	58.8	58.8	58.8	53.2	53.2	53.2
			SHC	27.5	37.2	47.0	25.1	34.9	44.7	22.7	32.6	42.4	20.2	30.0	39.9	17.4	27.3	37.2
		76	TC	—	78.9	78.9	—	74.5	74.5	—	—	—	—	—	—	—	—	—
			SHC	—	29.6	38.7	—	27.3	36.6	—	—	—	—	—	—	—	—	—

NOTE: See minimum-maximum airflow ratings on page 8.

LEGEND

— — Do Not Operate
cfm — Cubic Feet Per Minute (Supply Air)
EAT (db) — Entering Air Temperature (dry bulb)
EAT (wb) — Entering Air Temperature (wet bulb)
SHC — Sensible Heat Capacity (1000 Btuh) Gross
TC — Total Capacity (1000 Btuh) Gross

48/50GC*N08 — Unit with Humidi-MiZer® System in Subcooling Mode — Cooling Capacities

TEMP (°F) AIR ENTERING CONDENSER (Edb)		AIR ENTERING EVAPORATOR — SCFM/BF (80°F db)								
		2250/0.11			3000/0.14			3750/0.15		
		Air Entering Evaporator — Ewb (°F)								
		72	67	62	72	67	62	72	67	62
75	TC	106.5	96.2	85.4	112.7	100.8	92.7	117.4	106.9	95.5
	SHC	45.7	57.5	67.8	51.8	66.5	83.6	58.4	78.7	93.8
	kW	4.8	4.7	4.6	4.8	4.7	4.7	4.8	4.8	4.7
85	TC	101.0	90.4	80.6	106.2	95.3	85.3	110.8	100.2	89.4
	SHC	40.4	52.1	63.4	45.7	61.3	76.6	52.3	72.5	87.8
	kW	5.4	5.3	5.2	5.4	5.3	5.2	5.4	5.4	5.3
95	TC	94.2	83.0	75.6	98.3	90.5	80.8	103.3	92.5	85.7
	SHC	34.1	45.0	58.7	38.3	56.9	72.2	45.3	65.1	84.1
	kW	6.0	5.9	5.9	6.0	6.0	5.9	6.1	6.0	6.0
105	TC	85.3	79.2	69.8	93.7	84.4	75.2	95.8	87.8	79.6
	SHC	26.1	41.7	53.4	34.3	51.4	67.2	38.4	61.0	74.4
	kW	6.7	6.7	6.6	6.8	6.8	6.7	6.8	6.8	6.7
115	TC	79.7	71.1	64.2	86.2	77.5	68.2	90.6	80.5	72.4
	SHC	21.1	34.3	48.3	27.6	45.3	61.1	33.9	54.5	72.3
	kW	7.6	7.5	7.5	7.7	7.6	7.5	7.7	7.6	7.6
125	TC	74.5	64.1	57.1	78.1	68.8	61.3	81.3	73.1	65.4
	SHC	17.0	28.3	42.2	20.7	37.7	55.0	25.9	48.3	65.4
	kW	8.6	8.4	8.4	8.6	8.5	8.4	8.6	8.5	8.5

48/50GC*N08 — Unit with Humidi-MiZer System in Hot Gas Reheat Mode — Cooling Capacities

TEMP (°F) AIR ENTERING CONDENSER (Edb)		AIR ENTERING EVAPORATOR — Ewb (°F)								
		75 Dry Bulb 62.5 Wet Bulb (50% Relative)			75 Dry Bulb 64 Wet Bulb (56% Relative)			75 Dry Bulb 65.3 Wet Bulb (60% Relative)		
		Air Entering Evaporator — cfm								
		2250	3000	3750	2250	3000	3750	2250	3000	3750
80	TC	22.0	23.0	23.0	23.0	24.0	25.0	24.0	26.0	26.0
	SHC	–3.0	0.0	3.0	–5.0	–3.0	–1.0	–8.0	–7.0	–5.0
	kW	5.6	5.6	5.6	5.6	5.6	5.5	5.6	5.6	5.5
75	TC	22.0	24.0	24.0	24.0	26.0	26.0	25.0	27.0	27.0
	SHC	–2.0	1.0	4.0	–5.0	–2.0	0.0	–7.0	–6.0	–4.0
	kW	5.6	5.6	5.6	5.6	5.6	5.5	5.6	5.6	5.5
70	TC	23.0	25.0	25.0	25.0	26.0	27.0	26.0	28.0	28.0
	SHC	–1.0	2.0	5.0	–4.0	–1.0	1.0	–7.0	–5.0	–3.0
	kW	5.6	5.6	5.6	5.6	5.6	5.5	5.6	5.6	5.5
60	TC	25.0	27.0	27.0	27.0	28.0	29.0	28.0	30.0	30.0
	SHC	1.0	4.0	7.0	–2.0	0.0	2.0	–5.0	–3.0	–1.0
	kW	5.6	5.6	5.6	5.6	5.6	5.5	5.6	5.6	5.5
50	TC	27.0	28.0	29.0	28.0	30.0	30.0	29.0	31.0	32.0
	SHC	2.0	5.0	8.0	–1.0	2.0	4.0	–3.0	–1.0	1.0
	kW	5.6	5.6	5.6	5.6	5.6	5.5	5.6	5.6	5.5
40	TC	28.0	30.0	30.0	29.0	31.0	32.0	31.0	33.0	33.0
	SHC	3.0	7.0	10.0	1.0	3.0	6.0	–2.0	0.0	2.0
	kW	5.6	5.6	5.6	5.6	5.6	5.5	5.6	5.6	5.5

LEGEND

Edb — Entering Dry Bulb
Ewb — Entering Wet Bulb
kW — Compressor Power Input
SCFM/BF — Standard Cubic Feet per Minute/Bypass Factor
SHC — Sensible Heat Capacity (1000 Btuh) Gross
TC — Total Capacity (1000 Btuh) Gross

48/50GC**09 Two Stage Cooling Capacities

48/50GC**09				AMBIENT TEMPERATURE (°F)														
				85			95			105			115			125		
				EAT (db)			EAT (db)			EAT (db)			EAT (db)			EAT (db)		
				75	80	85	75	80	85	75	80	85	75	80	85	75	80	85
2550 cfm	EAT (wb)	58	TC	88.3	88.3	100.4	83.5	83.5	95.2	78.3	78.3	89.5	72.6	72.6	83.3	66.4	66.4	76.5
			SHC	76.2	88.3	100.4	71.8	83.5	95.2	67.1	78.3	89.5	61.9	72.6	83.3	56.3	66.4	76.5
		62	TC	93.2	93.2	95.7	87.4	87.4	92.1	81.0	81.0	88.3	74.1	74.1	84.1	66.8	66.8	79.2
			SHC	68.6	82.2	95.7	65.1	78.6	92.1	61.3	74.8	88.3	57.2	70.7	84.1	52.6	65.9	79.2
		67	TC	103.6	103.6	103.6	97.5	97.5	97.5	90.7	90.7	90.7	83.2	83.2	83.2	75.1	75.1	75.1
			SHC	55.8	69.3	82.8	52.3	65.8	79.3	48.5	62.1	75.6	44.6	58.1	71.7	40.4	54.0	67.5
		72	TC	115.0	115.0	115.0	108.5	108.5	108.5	101.2	101.2	101.2	93.3	93.3	93.3	84.6	84.6	84.6
			SHC	42.9	56.2	69.4	39.4	52.7	66.0	35.6	49.0	62.3	31.6	45.0	58.5	27.4	40.9	54.4
		76	TC	—	124.8	124.8	—	117.9	117.9	—	110.2	110.2	—	101.8	101.8	—	92.7	92.7
			SHC	—	45.4	59.4	—	42.0	53.8	—	38.3	50.8	—	34.4	47.3	—	30.3	43.5
3000 cfm	EAT (wb)	58	TC	94.3	94.3	107.1	89.2	89.2	101.5	83.6	83.6	95.5	77.6	77.6	88.8	70.9	70.9	81.5
			SHC	81.5	94.3	107.1	76.8	89.2	101.5	71.8	83.6	95.5	66.3	77.6	88.8	60.3	70.9	81.5
		62	TC	96.9	96.9	106.6	90.7	90.7	102.9	84.1	84.1	98.1	79.0	79.0	89.3	71.0	71.0	85.2
			SHC	75.2	90.9	106.6	71.5	87.2	102.9	67.2	82.7	98.1	61.1	75.2	89.3	56.9	71.0	85.2
		67	TC	107.3	107.3	107.3	100.9	100.9	100.9	93.7	93.7	93.7	85.9	85.9	85.9	77.5	77.5	77.5
			SHC	60.1	75.9	91.7	56.6	72.4	88.2	52.7	68.6	84.4	48.7	64.6	80.4	44.5	60.3	76.2
		72	TC	118.9	118.9	118.9	112.0	112.0	112.0	104.4	104.4	104.4	96.1	96.1	96.1	87.1	87.1	87.1
			SHC	44.7	60.3	75.9	41.1	56.8	72.4	37.3	53.0	68.6	33.2	49.0	64.7	29.0	44.7	60.5
		76	TC	—	129.1	129.1	—	121.6	121.6	—	113.6	113.6	—	—	—	—	—	—
			SHC	—	47.7	62.3	—	44.1	59.0	—	40.4	55.5	—	—	—	—	—	—
3400 cfm	EAT (wb)	58	TC	98.8	98.8	112.2	93.5	93.5	106.3	87.6	87.6	99.9	81.2	81.2	92.9	74.3	74.3	85.3
			SHC	85.5	98.8	112.2	80.6	93.5	106.3	75.3	87.6	99.9	69.6	81.2	92.9	63.3	74.3	85.3
		62	TC	99.6	99.6	114.8	94.4	94.4	109.0	87.9	87.9	103.8	81.4	81.4	97.0	74.4	74.4	89.1
			SHC	80.2	97.5	114.8	75.7	92.3	109.0	71.1	87.5	103.8	65.8	81.4	97.0	59.7	74.4	89.1
		67	TC	109.9	109.9	109.9	103.2	103.2	103.2	95.8	95.8	95.8	87.8	87.8	87.9	79.0	79.0	83.6
			SHC	63.7	81.5	99.3	60.1	77.9	95.8	56.3	74.1	92.0	52.2	70.1	87.9	47.9	65.8	83.6
		72	TC	121.6	121.6	121.6	114.5	114.5	114.5	106.6	106.6	106.6	98.1	98.1	98.1	88.8	88.8	88.8
			SHC	46.1	63.7	81.3	42.4	60.1	77.8	38.5	56.3	74.0	34.5	52.2	70.0	30.2	48.0	65.8
		76	TC	—	131.9	131.9	—	124.2	124.2	—	—	—	—	—	—	—	—	—
			SHC	—	49.4	66.3	—	45.7	62.8	—	—	—	—	—	—	—	—	—
3850 cfm	EAT (wb)	58	TC	103.2	103.2	117.0	97.6	97.6	110.9	91.4	91.4	104.2	84.8	84.8	96.8	77.5	77.5	88.8
			SHC	89.4	103.2	117.0	84.2	97.6	110.9	78.7	91.4	104.2	72.7	84.8	96.8	66.1	77.5	88.8
		62	TC	104.4	104.4	117.9	97.7	97.7	115.5	91.6	91.6	108.6	84.9	84.9	101.0	77.6	77.6	92.7
			SHC	83.0	100.4	117.9	79.9	97.7	115.5	74.5	91.6	108.6	68.7	84.9	101.0	62.4	77.6	92.7
		67	TC	112.1	112.1	112.1	105.3	105.3	105.3	97.7	97.7	100.2	89.4	89.4	96.1	80.5	80.5	91.6
			SHC	67.6	87.6	107.7	64.0	84.0	104.1	60.1	80.2	100.2	56.0	76.0	96.1	51.7	71.6	91.6
		72	TC	124.2	124.2	124.2	116.7	116.7	116.7	108.6	108.6	108.6	99.8	99.8	99.8	90.2	90.2	90.2
			SHC	47.4	67.3	87.2	43.7	63.6	83.5	39.8	59.8	79.7	35.7	55.7	75.7	31.4	51.4	71.4
		76	TC	—	134.4	134.4	—	—	—	—	—	—	—	—	—	—	—	—
			SHC	—	50.9	70.2	—	—	—	—	—	—	—	—	—	—	—	—
4250 cfm	EAT (wb)	58	TC	106.5	106.5	120.7	100.7	100.7	114.3	94.3	94.3	107.4	87.4	87.4	99.8	79.9	79.9	91.5
			SHC	92.3	106.5	120.7	87.0	100.7	114.3	81.3	94.3	107.4	75.1	87.4	99.8	68.3	79.9	91.5
		62	TC	106.6	106.6	125.6	100.8	100.8	119.1	94.5	94.5	111.9	87.5	87.5	104.1	80.0	80.0	95.5
			SHC	87.7	106.6	125.6	82.5	100.8	119.1	77.0	94.5	111.9	71.0	87.5	104.1	64.5	80.0	95.5
		67	TC	113.8	113.8	114.9	106.8	106.8	111.3	99.0	99.0	107.3	90.6	90.6	103.1	81.6	81.6	98.2
			SHC	70.9	92.9	114.9	67.3	89.3	111.3	63.4	85.4	107.3	59.3	81.2	103.1	54.8	76.5	98.2
		72	TC	125.9	125.9	125.9	118.3	118.3	118.3	110.0	110.0	110.0	101.0	101.0	101.0	91.3	91.3	91.3
			SHC	48.4	70.3	92.1	44.7	66.6	88.5	40.8	62.7	84.6	36.6	58.6	80.6	32.3	54.3	76.3
		76	TC	—	—	—	—	—	—	—	—	—	—	—	—	—	—	—
			SHC	—	—	—	—	—	—	—	—	—	—	—	—	—	—	—

LEGEND

— — Do Not Operate
cfm — Cubic Feet Per Minute (Supply Air)
EAT (db) — Entering Air Temperature (dry bulb)
EAT (wb) — Entering Air Temperature (wet bulb)
SHC — Sensible Heat Capacity (1000 Btuh) Gross
TC — Total Capacity (1000 Btuh) Gross

NOTE: See minimum-maximum airflow ratings on page 8.

48/50GC**09 Single Stage Cooling Capacities

48/50GC**09				AMBIENT TEMPERATURE (°F)														
				85			95			105			115			125		
				EAT (db)			EAT (db)			EAT (db)			EAT (db)			EAT (db)		
				75	80	85	75	80	85	75	80	85	75	80	85	75	80	85
1550 cfm	EAT (wb)	58	TC	51.0	51.0	58.4	47.7	47.7	54.8	44.2	44.2	51.1	40.4	40.4	46.9	36.1	36.1	42.3
			SHC	43.7	51.0	58.4	40.6	47.7	54.8	37.3	44.2	51.1	33.8	40.4	46.9	29.9	36.1	42.3
		62	TC	54.1	54.1	56.2	50.1	50.1	53.5	45.9	45.9	50.7	41.3	41.3	47.7	36.3	36.3	44.2
			SHC	39.5	47.8	56.2	36.8	45.1	53.5	34.0	42.4	50.7	31.1	39.4	47.7	27.8	36.0	44.2
		67	TC	61.0	61.0	61.0	56.8	56.8	56.8	52.4	52.4	52.4	47.6	47.6	47.6	42.1	42.1	42.1
			SHC	32.1	40.4	48.7	29.4	37.7	46.0	26.7	35.0	43.3	23.7	32.1	40.4	20.6	29.0	37.3
		72	TC	68.6	68.6	68.6	64.2	64.2	64.2	59.6	59.6	59.6	54.5	54.5	54.5	48.7	48.7	48.7
			SHC	24.7	32.9	41.1	22.0	30.2	38.5	19.2	27.5	35.8	16.3	24.6	32.9	13.2	21.5	29.8
		76	TC	—	75.2	75.2	—	70.6	70.6	—	65.8	65.8	—	—	—	—	—	—
			SHC	—	26.8	35.3	—	24.1	31.8	—	21.4	29.3	—	—	—	—	—	—
1800 cfm	EAT (wb)	58	TC	54.7	54.7	62.4	51.2	51.2	58.7	47.5	47.5	54.7	43.5	43.5	50.4	39.0	39.0	45.5
			SHC	46.9	54.7	62.4	43.7	51.2	58.7	40.3	47.5	54.7	36.6	43.5	50.4	32.5	39.0	45.5
		62	TC	56.2	56.2	62.5	52.2	52.2	59.8	47.8	47.8	56.6	43.6	43.6	52.8	39.1	39.1	47.8
			SHC	43.4	53.0	62.5	40.7	50.2	59.8	37.6	47.1	56.6	34.3	43.6	52.8	30.4	39.1	47.8
		67	TC	63.3	63.3	63.3	59.0	59.0	59.0	54.4	54.4	54.4	49.3	49.3	49.3	43.7	43.7	43.7
			SHC	34.7	44.4	54.0	32.0	41.7	51.3	29.2	38.8	48.5	26.3	35.9	45.5	23.1	32.7	42.4
		72	TC	71.1	71.1	71.1	66.5	66.5	66.5	61.7	61.7	61.7	56.4	56.4	56.4	50.3	50.3	50.3
			SHC	26.0	35.5	45.0	23.3	32.8	42.4	20.4	30.0	39.6	17.5	27.1	36.7	14.3	23.9	33.5
		76	TC	—	77.8	77.8	—	—	—	—	—	—	—	—	—	—	—	—
			SHC	—	28.3	37.4	—	—	—	—	—	—	—	—	—	—	—	—
2050 cfm	EAT (wb)	58	TC	57.8	57.8	65.9	54.2	54.2	62.0	50.3	50.3	57.8	46.1	46.1	53.3	41.4	41.4	48.2
			SHC	49.7	57.8	65.9	46.3	54.2	62.0	42.8	50.3	57.8	38.9	46.1	53.3	34.6	41.4	48.2
		62	TC	58.2	58.2	68.1	54.5	54.5	64.3	50.4	50.4	60.5	46.2	46.2	55.8	41.5	41.5	50.5
			SHC	46.8	57.5	68.1	43.6	53.9	64.3	40.3	50.4	60.5	36.6	46.2	55.8	32.4	41.5	50.5
		67	TC	65.1	65.1	65.1	60.7	60.7	60.7	55.9	55.9	55.9	50.7	50.7	50.7	44.8	44.8	47.3
			SHC	37.2	48.1	59.0	34.5	45.4	56.4	31.6	42.6	53.5	28.6	39.6	50.5	25.4	36.4	47.3
		72	TC	73.0	73.0	73.0	68.3	68.3	68.3	63.3	63.3	63.3	57.8	57.8	57.8	51.6	51.6	51.6
			SHC	27.1	37.9	48.8	24.3	35.2	46.1	21.5	32.4	43.2	18.5	29.4	40.3	15.3	26.2	37.1
		76	TC	—	—	—	—	—	—	—	—	—	—	—	—	—	—	—
			SHC	—	—	—	—	—	—	—	—	—	—	—	—	—	—	—
2300 cfm	EAT (wb)	58	TC	60.5	60.5	68.9	56.7	56.7	64.9	52.7	52.7	60.5	48.4	48.4	55.8	43.5	43.5	50.5
			SHC	52.1	60.5	68.9	48.6	56.7	64.9	44.9	52.7	60.5	40.9	48.4	55.8	36.5	43.5	50.5
		62	TC	60.6	60.6	71.9	56.8	56.8	67.7	52.8	52.8	63.2	48.4	48.4	58.4	43.5	43.5	52.9
			SHC	49.4	60.6	71.9	46.0	56.8	67.7	42.4	52.8	63.2	38.5	48.4	58.4	34.2	43.5	52.9
		67	TC	66.5	66.5	66.5	62.0	62.0	62.0	57.1	57.1	58.4	51.8	51.8	55.4	45.8	45.8	52.1
			SHC	39.6	51.8	64.0	36.8	49.0	61.2	33.9	46.2	58.4	30.9	43.2	55.4	27.7	39.9	52.1
		72	TC	74.6	74.6	74.6	69.7	69.7	69.7	64.7	64.7	64.7	59.0	59.0	59.0	—	—	—
			SHC	28.1	40.3	52.4	25.3	37.5	49.6	22.5	34.6	46.8	19.4	31.6	43.8	—	—	—
		76	TC	—	—	—	—	—	—	—	—	—	—	—	—	—	—	—
			SHC	—	—	—	—	—	—	—	—	—	—	—	—	—	—	—
2550 cfm	EAT (wb)	58	TC	62.9	62.9	71.5	59.0	59.0	67.3	54.8	54.8	62.9	50.3	50.3	58.0	45.3	45.3	52.5
			SHC	54.2	62.9	71.5	50.6	59.0	67.3	46.8	54.8	62.9	42.7	50.3	58.0	38.1	45.3	52.5
		62	TC	63.0	63.0	74.6	59.1	59.1	70.3	54.9	54.9	65.6	50.4	50.4	60.6	45.3	45.3	55.0
			SHC	51.4	63.0	74.6	47.9	59.1	70.3	44.2	54.9	65.6	40.2	50.4	60.6	35.7	45.3	55.0
		67	TC	67.9	67.9	68.8	63.1	63.1	66.1	58.2	58.2	63.2	52.7	52.7	60.0	46.5	46.5	56.6
			SHC	41.9	55.4	68.8	39.1	52.6	66.1	36.2	49.7	63.2	33.1	46.6	60.0	29.8	43.2	56.6
		72	TC	75.8	75.8	75.8	70.9	70.9	70.9	65.7	65.7	65.7	—	—	—	—	—	—
			SHC	29.1	42.5	55.9	26.2	39.7	53.1	23.3	36.8	50.3	—	—	—	—	—	—
		76	TC	—	—	—	—	—	—	—	—	—	—	—	—	—	—	—
			SHC	—	—	—	—	—	—	—	—	—	—	—	—	—	—	—

LEGEND

— — Do Not Operate
cfm — Cubic Feet Per Minute (Supply Air)
EAT (db) — Entering Air Temperature (dry bulb)
EAT (wb) — Entering Air Temperature (wet bulb)
SHC — Sensible Heat Capacity (1000 Btuh) Gross
TC — Total Capacity (1000 Btuh) Gross

NOTE: See minimum-maximum airflow ratings on page 8.

48/50GC*N09 — Unit with Humidi-MiZer® System in Subcooling Mode — Cooling Capacities

TEMP (°F) AIR ENTERING CONDENSER (Edb)		AIR ENTERING EVAPORATOR — SCFM/BF (80°F db)								
		2550/0.06			3400/0.07			4250/0.09		
		Air Entering Evaporator — Ewb (°F)								
		72	67	62	72	67	62	72	67	62
75	TC	115.7	104.9	93.3	126.6	114.6	102.8	132.7	119.7	107.4
	SHC	49.7	63.5	75.2	60.7	78.0	94.2	68.5	89.9	105.9
	kW	5.3	5.3	5.2	5.4	5.4	5.3	5.4	5.4	5.3
85	TC	105.8	94.0	87.4	119.2	106.5	95.9	126.3	113.4	103.7
	SHC	40.4	53.0	69.7	53.6	70.3	87.7	62.6	84.0	102.5
	kW	6.0	5.9	5.9	6.1	6.0	6.0	6.2	6.1	6.0
95	TC	100.9	90.8	80.5	108.0	98.9	88.6	117.1	105.3	96.4
	SHC	35.8	50.1	63.2	43.4	63.3	80.8	53.7	76.3	95.6
	kW	6.8	6.7	6.7	6.8	6.8	6.7	6.9	6.8	6.8
105	TC	94.1	83.3	73.4	103.0	91.0	80.9	108.8	97.6	84.0
	SHC	29.7	43.2	56.5	38.8	56.0	73.7	46.1	69.3	77.2
	kW	7.6	7.6	7.5	7.7	7.6	7.5	7.7	7.6	7.5
115	TC	86.2	75.7	65.8	93.8	82.9	72.5	99.9	86.8	79.5
	SHC	22.9	36.3	49.7	30.4	48.7	65.8	38.0	59.3	79.5
	kW	8.6	8.5	8.4	8.7	8.5	8.4	8.7	8.5	8.5
125	TC	77.0	66.9	58.1	84.3	72.7	64.5	90.1	78.2	71.2
	SHC	14.9	28.6	42.8	22.1	39.7	58.8	29.3	52.0	71.2
	kW	9.6	9.5	9.4	9.6	9.5	9.4	9.7	9.5	9.5

48/50GC*N09 — Unit with Humidi-MiZer System in Hot Gas Reheat Mode — Cooling Capacities

TEMP (°F) AIR ENTERING CONDENSER (Edb)		AIR ENTERING EVAPORATOR — Ewb (°F)								
		75 Dry Bulb 62.5 Wet Bulb (50% Relative)			75 Dry Bulb 64 Wet Bulb (56% Relative)			75 Dry Bulb 65.3 Wet Bulb (60% Relative)		
		Air Entering Evaporator — cfm								
		2550	3400	4250	2550	3400	4250	2550	3400	4250
80	TC	35.7	40.7	45.5	37.2	42.1	47.0	38.5	43.4	48.3
	SHC	2.4	11.4	21.8	–2.2	5.0	13.5	–5.9	–0.3	6.6
	kW	5.3	5.2	5.2	5.2	5.2	5.2	5.2	5.2	5.2
75	TC	37.8	42.9	47.8	39.5	44.6	49.6	40.8	45.9	50.9
	SHC	4.4	13.6	24.1	–0.1	7.3	16.0	–3.9	1.9	9.0
	kW	5.3	5.2	5.2	5.2	5.2	5.2	5.2	5.2	5.2
70	TC	40.1	45.3	50.2	41.7	47.0	52.0	43.1	48.3	53.4
	SHC	6.6	15.9	26.6	1.9	9.5	18.4	–2.0	4.1	11.4
	kW	5.3	5.2	5.2	5.2	5.2	5.2	5.2	5.2	5.2
60	TC	44.4	50.0	55.1	46.2	51.7	56.9	47.7	53.1	58.4
	SHC	10.8	20.6	31.4	6.0	14.1	23.2	2.0	8.6	16.2
	kW	5.3	5.2	5.2	5.2	5.2	5.2	5.2	5.2	5.2
50	TC	48.7	54.4	59.6	50.6	56.3	61.7	52.1	57.8	63.2
	SHC	15.0	24.9	36.0	10.2	18.6	28.0	6.1	13.1	21.0
	kW	5.3	5.2	5.2	5.2	5.2	5.2	5.2	5.2	5.2
40	TC	52.9	58.8	64.2	55.0	60.9	66.3	56.6	62.5	68.0
	SHC	19.1	29.3	40.6	14.4	23.1	32.7	10.2	17.5	25.8
	kW	5.3	5.2	5.2	5.2	5.2	5.2	5.2	5.2	5.2

LEGEND

Edb — Entering Dry Bulb
Ewb — Entering Wet Bulb
kW — Compressor Power Input
SCFM/BF — Standard Cubic Feet per Minute/Bypass Factor
SHC — Sensible Heat Capacity (1000 Btuh) Gross
TC — Total Capacity (1000 Btuh) Gross

48/50GC**12 Two Stage Cooling Capacities

48/50GC**12				AMBIENT TEMPERATURE (°F)														
				85			95			105			115			125		
				EAT (db)			EAT (db)			EAT (db)			EAT (db)			EAT (db)		
				75	80	85	75	80	85	75	80	85	75	80	85	75	80	85
3000 cfm	EAT (wb)	58	TC	105.2	105.2	119.6	99.0	99.0	112.9	92.6	92.6	105.9	85.8	85.8	98.5	78.7	78.7	90.8
			SHC	90.7	105.2	119.6	85.1	99.0	112.9	79.2	92.6	105.9	73.1	85.8	98.5	66.7	78.7	90.8
		62	TC	111.8	111.8	112.5	104.3	104.3	107.9	96.4	96.4	103.1	88.3	88.3	98.2	79.9	79.9	92.9
			SHC	81.1	96.8	112.5	76.5	92.2	107.9	71.8	87.4	103.1	66.9	82.6	98.2	61.9	77.4	92.9
		67	TC	124.3	124.3	124.3	116.3	116.3	116.3	108.1	108.1	108.1	99.5	99.5	99.5	90.5	90.5	90.5
			SHC	66.1	81.6	97.2	61.5	77.1	92.7	56.9	72.5	88.1	52.1	67.8	83.5	47.3	63.0	78.7
		72	TC	138.1	138.1	138.1	129.6	129.6	129.6	120.8	120.8	120.8	111.6	111.6	111.6	102.2	102.2	102.2
			SHC	51.1	66.3	81.5	46.5	61.8	77.1	41.8	57.2	72.6	37.1	52.5	67.9	32.2	47.7	63.2
		76	TC	—	150.5	150.5	—	141.3	141.3	—	131.8	131.8	—	122.1	122.1	—	112.2	112.2
			SHC	—	53.3	69.8	—	49.2	65.7	—	44.7	58.1	—	40.1	54.4	—	35.4	50.2
3500 cfm	EAT (wb)	58	TC	112.0	112.0	127.2	105.4	105.4	120.1	98.6	98.6	112.7	91.6	91.6	105.0	84.1	84.1	96.8
			SHC	96.8	112.0	127.2	90.8	105.4	120.1	84.6	98.6	112.7	78.2	91.6	105.0	71.5	84.1	96.8
		62	TC	115.8	115.8	124.5	108.5	108.5	120.6	100.1	100.1	114.7	92.1	92.1	108.7	85.2	85.2	98.9
			SHC	88.4	106.4	124.5	84.2	102.4	120.6	78.8	96.7	114.7	73.5	91.1	108.7	66.3	82.6	98.9
		67	TC	128.5	128.5	128.5	120.2	120.2	120.2	111.6	111.6	111.6	102.7	102.7	102.7	93.3	93.3	93.3
			SHC	70.8	88.9	106.9	66.2	84.3	102.4	61.5	79.6	97.7	56.7	74.8	92.9	51.8	69.9	88.0
		72	TC	142.4	142.4	142.4	133.6	133.6	133.6	124.3	124.3	124.3	114.8	114.8	114.8	105.0	105.0	105.0
			SHC	53.1	70.8	88.5	48.4	66.2	84.0	43.7	61.5	79.4	38.8	56.7	74.6	33.9	51.9	69.9
		76	TC	—	154.5	154.5	—	145.0	145.0	—	135.3	135.3	—	125.3	125.3	—	115.0	115.0
			SHC	—	56.1	71.5	—	51.6	67.9	—	46.9	63.8	—	42.2	59.4	—	37.4	54.9
4000 cfm	EAT (wb)	58	TC	117.7	117.7	133.5	110.8	110.8	126.1	103.8	103.8	118.4	96.4	96.4	110.3	88.6	88.6	101.8
			SHC	101.8	117.7	133.5	95.6	110.8	126.1	89.2	103.8	118.4	82.5	96.4	110.3	75.4	88.6	101.8
		62	TC	119.3	119.3	135.6	111.6	111.6	130.0	103.9	103.9	123.4	96.8	96.8	115.4	88.7	88.7	106.4
			SHC	95.1	115.3	135.6	90.0	110.0	130.0	84.4	103.9	123.4	78.1	96.8	115.4	71.1	88.7	106.4
		67	TC	131.8	131.8	131.8	123.2	123.2	123.2	114.3	114.3	114.3	105.1	105.1	105.1	95.6	95.6	97.1
			SHC	75.3	95.7	116.2	70.6	91.1	111.6	65.8	86.3	106.8	61.0	81.6	102.1	56.1	76.6	97.1
		72	TC	145.8	145.8	145.8	136.6	136.6	136.6	127.0	127.0	127.0	117.3	117.3	117.3	114.0	114.0	114.0
			SHC	54.8	75.0	95.2	50.1	70.3	90.6	45.3	65.5	85.8	40.4	60.7	81.1	42.4	62.8	83.1
		76	TC	—	157.8	157.8	—	148.0	148.0	—	138.0	138.0	—	132.2	132.2	—	—	—
			SHC	—	58.2	77.1	—	53.6	72.8	—	48.9	68.4	—	48.7	68.4	—	—	—
4500 cfm	EAT (wb)	58	TC	122.6	122.6	139.0	115.5	115.5	131.2	108.1	108.1	123.2	100.4	100.4	114.8	92.4	92.4	106.0
			SHC	106.2	122.6	139.0	99.7	115.5	131.2	93.0	108.1	123.2	86.1	100.4	114.8	78.8	92.4	106.0
		62	TC	123.8	123.8	142.0	117.3	117.3	132.5	108.2	108.2	128.4	100.5	100.5	119.7	92.5	92.5	110.6
			SHC	99.6	120.8	142.0	92.7	112.6	132.5	88.1	108.2	128.4	81.3	100.5	119.7	74.3	92.5	110.6
		67	TC	134.4	134.4	134.4	125.6	125.6	125.6	116.5	116.5	116.5	107.1	107.1	110.9	97.6	97.6	106.6
			SHC	79.5	102.4	125.2	74.8	97.7	120.5	70.1	92.9	115.7	65.2	88.1	110.9	60.6	83.6	106.6
		72	TC	148.3	148.3	148.3	138.9	138.9	138.9	129.2	129.2	129.2	119.2	119.2	119.2	109.0	109.0	109.0
			SHC	56.3	78.9	101.5	51.6	74.2	96.8	46.7	69.4	92.1	41.9	64.5	87.2	36.9	59.6	82.3
		76	TC	—	160.4	160.4	—	150.4	150.4	—	140.1	140.1	—	—	—	—	—	—
			SHC	—	60.0	81.6	—	55.3	77.2	—	50.5	72.6	—	—	—	—	—	—
5000 cfm	EAT (wb)	58	TC	126.8	126.8	143.7	119.4	119.4	135.6	111.8	111.8	127.3	103.8	103.8	118.6	102.3	102.3	112.7
			SHC	109.9	126.8	143.7	103.2	119.4	135.6	96.3	111.8	127.3	89.1	103.8	118.6	91.8	102.3	112.7
		62	TC	130.2	130.2	141.8	119.6	119.6	141.2	111.9	111.9	132.6	103.9	103.9	123.6	102.5	102.5	121.1
			SHC	100.9	121.3	141.8	97.9	119.6	141.2	91.2	111.9	132.6	84.2	103.9	123.6	83.8	102.5	121.1
		67	TC	136.5	136.5	136.5	127.5	127.5	129.1	118.2	118.2	124.5	108.6	108.6	119.4	105.5	105.5	121.1
			SHC	83.6	108.8	133.9	78.9	104.0	129.1	74.2	99.3	124.5	69.2	94.3	119.4	71.1	96.1	121.1
		72	TC	150.5	150.5	150.5	140.8	140.8	140.8	130.9	130.9	130.9	120.8	120.8	120.8	117.2	117.2	117.2
			SHC	57.7	82.6	107.5	52.9	77.9	102.8	48.1	73.1	98.0	43.2	68.2	93.2	45.2	70.3	95.3
		76	TC	—	162.4	162.4	—	152.3	152.3	—	—	—	—	—	—	—	—	—
			SHC	—	61.6	85.8	—	56.8	81.1	—	—	—	—	—	—	—	—	—

LEGEND

— — Do Not Operate
cfm — Cubic Feet Per Minute (Supply Air)
EAT (db) — Entering Air Temperature (dry bulb)
EAT (wb) — Entering Air Temperature (wet bulb)
SHC — Sensible Heat Capacity (1000 Btuh) Gross
TC — Total Capacity (1000 Btuh) Gross

NOTE: See minimum-maximum airflow ratings on page 8.

48/50GC**12 Single Stage Cooling Capacities

48/50GC**12				AMBIENT TEMPERATURE (°F)														
				85			95			105			115			125		
				EAT (db)			EAT (db)			EAT (db)			EAT (db)			EAT (db)		
				75	80	85	75	80	85	75	80	85	75	80	85	75	80	85
1800 cfm	EAT (wb)	58	TC	65.5	65.5	74.2	62.3	62.3	70.8	59.0	59.0	67.1	55.4	55.4	63.1	51.6	51.6	58.9
			SHC	56.8	65.5	74.2	53.9	62.3	70.8	50.9	59.0	67.1	47.7	55.4	63.1	44.3	51.6	58.9
		62	TC	69.7	69.7	69.7	65.7	65.7	67.3	61.6	61.6	65.0	57.2	57.2	62.5	52.5	52.5	59.8
			SHC	50.8	60.2	69.6	48.6	58.0	67.3	46.2	55.6	65.0	43.8	53.1	62.5	41.2	50.5	59.8
		67	TC	77.2	77.2	77.2	72.9	72.9	72.9	68.4	68.4	68.4	63.7	63.7	63.7	58.7	58.7	58.7
			SHC	41.8	51.1	60.3	39.5	48.8	58.1	37.2	46.5	55.8	34.8	44.1	53.5	32.3	41.7	51.0
		72	TC	85.3	85.3	85.3	80.7	80.7	80.7	75.9	75.9	75.9	70.8	70.8	70.8	65.5	65.5	65.5
			SHC	32.8	41.8	50.7	30.5	39.5	48.6	28.1	37.3	46.4	25.7	34.9	44.1	23.3	32.5	41.7
		76	TC	—	92.4	92.4	—	87.5	87.5	—	82.4	82.4	—	77.0	77.0	—	71.3	71.3
			SHC	—	33.7	43.6	—	31.7	41.6	—	29.6	39.5	—	27.4	35.4	—	25.0	33.6
2100 cfm	EAT (wb)	58	TC	69.6	69.6	78.8	66.2	66.2	75.1	62.6	62.6	71.1	58.8	58.8	66.9	54.8	54.8	62.5
			SHC	60.4	69.6	78.8	57.3	66.2	75.1	54.1	62.6	71.1	50.7	58.8	66.9	47.1	54.8	62.5
		62	TC	71.3	71.3	76.0	68.0	68.0	74.4	63.7	63.7	71.9	59.3	59.3	69.0	55.1	55.1	64.6
			SHC	54.3	65.2	76.0	52.8	63.6	74.4	50.4	61.1	71.9	47.7	58.4	69.0	44.3	54.4	64.6
		67	TC	79.7	79.7	79.7	75.2	75.2	75.2	70.5	70.5	70.5	67.3	67.3	67.3	60.4	60.4	60.4
			SHC	44.6	55.4	66.1	42.3	53.1	63.8	39.9	50.7	61.5	39.2	50.0	60.8	35.0	45.8	56.6
		72	TC	87.9	87.9	87.9	83.0	83.0	83.0	78.0	78.0	78.0	72.7	72.7	72.7	67.2	67.2	67.2
			SHC	33.9	44.5	55.0	31.6	42.2	52.8	29.3	39.9	50.5	26.8	37.5	48.2	24.3	35.0	45.7
		76	TC	—	95.0	95.0	—	89.9	89.9	—	84.5	84.5	—	78.9	78.9	—	—	—
			SHC	—	35.5	47.1	—	33.3	42.6	—	31.1	40.8	—	28.7	38.8	—	—	—
2400 cfm	EAT (wb)	58	TC	73.0	73.0	82.6	69.4	69.4	78.7	65.6	65.6	74.5	61.7	61.7	70.1	57.4	57.4	65.4
			SHC	63.4	73.0	82.6	60.2	69.4	78.7	56.8	65.6	74.5	53.2	61.7	70.1	49.4	57.4	65.4
		62	TC	74.2	74.2	83.6	70.0	70.0	80.7	65.7	65.7	77.6	61.7	61.7	73.0	57.5	57.5	68.2
			SHC	59.2	71.4	83.6	56.6	68.7	80.7	53.9	65.7	77.6	50.4	61.7	73.0	46.8	57.5	68.2
		67	TC	81.6	81.6	81.6	77.0	77.0	77.0	72.1	72.1	72.1	67.0	67.0	67.0	61.7	61.7	62.0
			SHC	47.2	59.4	71.6	44.9	57.1	69.3	42.5	54.8	67.0	40.0	52.3	64.6	37.5	49.8	62.0
		72	TC	89.8	89.8	89.8	84.8	84.8	84.8	79.6	79.6	79.6	74.2	74.2	74.2	68.5	68.5	68.5
			SHC	35.0	47.0	59.0	32.6	44.7	56.8	30.3	42.4	54.5	27.8	39.9	52.0	25.3	37.5	49.6
		76	TC	—	96.9	96.9	—	91.6	91.6	—	—	—	—	—	—	—	—	—
			SHC	—	36.9	47.8	—	34.6	45.9	—	—	—	—	—	—	—	—	—
2700 cfm	EAT (wb)	58	TC	75.9	75.9	85.9	72.2	72.2	81.7	68.2	68.2	77.4	64.0	64.0	72.8	59.6	59.6	67.9
			SHC	66.0	75.9	85.9	62.6	72.2	81.7	59.0	68.2	77.4	55.3	64.0	72.8	51.3	59.6	67.9
		62	TC	76.6	76.6	88.3	72.6	72.6	84.1	68.3	68.3	80.6	64.1	64.1	75.8	59.7	59.7	70.7
			SHC	62.3	75.3	88.3	59.0	71.5	84.1	56.0	68.3	80.6	52.4	64.1	75.8	48.6	59.7	70.7
		67	TC	83.2	83.2	83.2	78.4	78.4	78.4	73.4	73.4	73.4	68.2	68.2	69.9	62.7	62.7	67.3
			SHC	49.7	63.4	77.0	47.4	61.0	74.7	45.0	58.6	72.3	42.5	56.2	69.9	40.0	53.6	67.3
		72	TC	91.4	91.4	91.4	86.2	86.2	86.2	80.9	80.9	80.9	75.4	75.4	75.4	69.5	69.5	69.5
			SHC	35.9	49.4	62.8	33.6	47.1	60.6	31.2	44.7	58.2	28.7	42.3	55.8	26.2	39.8	53.3
		76	TC	—	98.5	98.5	—	—	—	—	—	—	—	—	—	—	—	—
			SHC	—	38.1	50.8	—	—	—	—	—	—	—	—	—	—	—	—
3000 cfm	EAT (wb)	58	TC	78.5	78.5	88.7	74.5	74.5	84.4	70.4	70.4	79.9	66.1	66.1	75.1	61.5	61.5	70.0
			SHC	68.2	78.5	88.7	64.7	74.5	84.4	61.0	70.4	79.9	57.1	66.1	75.1	53.0	61.5	70.0
		62	TC	78.4	78.4	92.2	74.6	74.6	87.8	70.5	70.5	83.1	66.2	66.2	78.2	61.5	61.5	72.9
			SHC	64.6	78.4	92.2	61.4	74.6	87.8	57.9	70.5	83.1	54.2	66.2	78.2	50.2	61.5	72.9
		67	TC	84.4	84.4	84.4	79.5	79.5	79.9	74.4	74.4	77.4	69.1	69.1	74.9	63.6	63.6	72.2
			SHC	52.1	67.2	82.3	49.8	64.8	79.9	47.3	62.4	77.4	44.8	59.9	74.9	42.2	57.2	72.2
		72	TC	92.6	92.6	92.6	87.4	87.4	87.4	82.0	82.0	82.0	76.3	76.3	76.3	70.3	70.3	70.3
			SHC	36.8	51.7	66.5	34.4	49.3	64.3	32.0	47.0	61.9	29.6	44.5	59.5	27.0	42.0	57.0
		76	TC	—	—	—	—	—	—	—	—	—	—	—	—	—	—	—
			SHC	—	—	—	—	—	—	—	—	—	—	—	—	—	—	—

LEGEND

— — Do Not Operate
cfm — Cubic Feet Per Minute (Supply Air)
EAT (db) — Entering Air Temperature (dry bulb)
EAT (wb) — Entering Air Temperature (wet bulb)
SHC — Sensible Heat Capacity (1000 Btuh) Gross
TC — Total Capacity (1000 Btuh) Gross

NOTE: See minimum-maximum airflow ratings on page 8.

48/50GC*N12 — Unit with Humidi-MiZer® System in Subcooling Mode — Cooling Capacities

TEMP (°F) AIR ENTERING CONDENSER (Edb)		AIR ENTERING EVAPORATOR — SCFM/BF (80°F db)								
		3000/0.06			4000/0.08			5000/0.10		
		Air Entering Evaporator — Ewb (°F)								
		72	67	62	72	67	62	72	67	62
75	TC	125.0	115.0	102.0	131.0	123.0	110.0	138.0	123.0	112.0
	SHC	48.0	66.0	80.0	54.0	80.0	98.0	65.0	88.0	111.0
	kW	7.0	6.9	6.7	7.2	7.0	6.7	7.3	7.0	6.8
85	TC	122.0	106.0	97.0	128.0	110.0	100.0	124.0	112.0	103.0
	SHC	46.0	57.0	74.0	51.0	68.0	90.0	52.0	78.0	95.0
	kW	7.9	7.6	7.6	8.0	7.7	7.5	8.0	7.8	7.6
95	TC	108.0	101.0	90.0	116.0	103.0	90.0	112.0	105.0	94.0
	SHC	33.0	54.0	69.0	41.0	62.0	81.0	41.0	72.0	87.0
	kW	8.7	8.7	8.5	8.9	8.7	8.5	8.9	8.8	8.5
105	TC	111.0	92.0	83.0	106.0	93.0	82.0	106.0	93.0	86.0
	SHC	35.0	46.0	63.0	33.0	53.0	73.0	35.0	62.0	61.0
	kW	8.8	9.8	9.6	10.0	9.7	9.5	10.0	9.8	9.6
115	TC	88.0	82.0	76.0	94.0	81.0	74.0	96.0	83.0	74.0
	SHC	15.0	36.0	57.0	22.0	42.0	65.0	27.0	53.0	74.0
	kW	10.9	10.9	10.9	11.1	10.9	10.8	11.2	11.0	10.8

48/50GC*N12 — Unit with Humidi-MiZer System in Hot Gas Reheat Mode — Cooling Capacities

TEMP (°F) AIR ENTERING CONDENSER (Edb)		AIR ENTERING EVAPORATOR — Ewb (°F)								
		75 Dry Bulb 62.5 Wet Bulb (50% Relative)			75 Dry Bulb 64 Wet Bulb (56% Relative)			75 Dry Bulb 65.3 Wet Bulb (60% Relative)		
		Air Entering Evaporator — cfm								
		3000	4000	5000	3000	4000	5000	3000	4000	5000
80	TC	53.7	54.5	53.2	57.3	58.1	56.8	60.5	61.4	60.1
	SHC	12.5	7.5	3.4	13.3	7.9	3.6	14.1	8.4	3.8
	kW	6.5	6.5	6.5	6.5	6.5	6.5	6.6	6.6	6.6
75	TC	59.9	61.2	60.3	63.7	64.9	64.0	67.0	68.3	67.4
	SHC	19.0	13.9	9.5	20.2	14.8	10.1	21.2	15.5	10.6
	kW	6.2	6.2	6.2	6.2	6.2	6.3	6.3	6.3	6.3
70	TC	66.3	68.2	67.7	70.1	72.1	71.5	73.5	75.6	75.1
	SHC	25.5	20.6	16.0	27.0	21.8	16.9	28.3	22.8	17.7
	kW	5.9	5.9	6.0	6.0	6.0	6.0	6.0	6.0	6.0
60	TC	79.0	82.2	82.6	83.1	86.3	86.6	86.5	90.0	90.4
	SHC	38.7	34.3	29.6	40.7	36.0	31.0	42.4	37.5	32.4
	kW	5.4	5.4	5.5	5.4	5.5	5.5	5.5	5.5	5.5
50	TC	92.3	96.8	98.2	96.6	101.2	102.5	100.3	105.0	106.4
	SHC	52.6	48.9	44.6	55.1	51.2	46.5	57.2	53.1	48.3
	kW	4.9	5.0	5.0	4.9	5.0	5.0	5.0	5.0	5.1
40	TC	106.1	112.0	114.3	110.5	116.4	118.6	114.3	120.3	122.5
	SHC	67.5	64.8	60.8	70.3	67.3	63.1	72.7	69.6	65.2
	kW	4.4	4.5	4.6	4.5	4.5	4.6	4.5	4.6	4.6

LEGEND

Ewb — Entering wet bulb
kW — compressor Power Input
SCFM/BF — Standard Cubic Feet per Minute/Bypass Factor
SHC — Sensible Heat Capacity (1000 Btuh) Gross
TC — Total Capacity (1000 Btuh) Gross

48/50GC**14 Two Stage Cooling Capacities

48/50GC**14				AMBIENT TEMPERATURE (°F)														
				85			95			105			115			125		
				EAT (db)			EAT (db)			EAT (db)			EAT (db)			EAT (db)		
				75	80	85	75	80	85	75	80	85	75	80	85	75	80	85
3750 cfm	EAT (wb)	58	TC	129.5	129.5	147.5	125.1	125.1	142.5	120.2	120.2	136.9	114.8	114.8	130.8	108.7	108.7	123.9
			SHC	111.5	129.5	147.5	107.7	125.1	142.5	103.5	120.2	136.9	98.8	114.8	130.8	93.5	108.7	123.9
		62	TC	137.5	137.5	139.4	131.7	131.7	136.7	125.2	125.2	133.8	118.1	118.1	130.4	110.2	110.2	126.7
			SHC	99.8	119.6	139.4	97.2	117.0	136.7	94.3	114.0	133.8	91.1	110.8	130.4	87.6	107.1	126.7
		67	TC	152.8	152.8	152.8	146.5	146.5	146.5	139.5	139.5	139.5	131.8	131.8	131.8	123.2	123.2	123.2
			SHC	81.0	100.9	120.7	78.4	98.2	118.0	75.6	95.4	115.1	72.5	92.2	112.0	69.1	88.8	108.5
		72	TC	169.3	169.3	169.3	162.4	162.4	162.4	154.7	154.7	154.7	146.3	146.3	146.3	137.0	137.0	137.0
			SHC	61.8	81.5	101.2	59.2	78.9	98.6	56.4	76.0	95.7	53.3	72.9	92.5	49.9	69.5	89.0
		76	TC	—	182.3	182.3	—	174.6	174.6	—	166.2	166.2	—	156.8	156.8	—	146.3	146.3
			SHC	—	65.5	84.6	—	62.8	82.0	—	59.9	79.0	—	56.7	75.7	—	53.1	72.0
4400 cfm	EAT (wb)	58	TC	138.3	138.3	157.3	133.5	133.5	151.8	128.2	128.2	145.8	122.3	122.3	139.1	115.7	115.7	131.7
			SHC	119.3	138.3	157.3	115.1	133.5	151.8	110.5	128.2	145.8	105.4	122.3	139.1	99.7	115.7	131.7
		62	TC	142.8	142.8	155.2	136.6	136.6	152.2	134.3	134.3	137.4	124.3	124.3	140.3	118.1	118.1	131.2
			SHC	109.4	132.3	155.2	106.6	129.4	152.2	98.4	117.9	137.4	97.8	119.0	140.3	91.8	111.5	131.2
		67	TC	158.2	158.2	158.2	151.5	151.5	151.5	144.2	144.2	144.2	136.0	136.0	136.0	127.1	127.1	127.1
			SHC	87.2	110.2	133.2	84.5	107.5	130.5	81.6	104.6	127.5	78.4	101.3	124.2	75.0	97.8	120.7
		72	TC	174.7	174.7	174.7	167.3	167.3	167.3	159.2	159.2	159.2	150.3	150.3	150.3	140.4	140.4	140.4
			SHC	64.4	87.2	110.1	61.7	84.5	107.3	58.8	81.5	104.3	55.6	78.3	100.9	52.2	74.7	97.2
		76	TC	—	187.1	187.1	—	178.8	178.8	—	169.8	169.8	—	159.7	159.7	—	148.6	148.6
			SHC	—	68.1	90.3	—	65.3	87.4	—	62.3	84.2	—	58.9	80.6	—	55.1	76.6
5000 cfm	EAT (wb)	58	TC	145.1	145.1	164.8	139.9	139.9	159.1	134.3	134.3	152.6	128.0	128.0	145.6	121.0	121.0	137.6
			SHC	125.3	145.1	164.8	120.8	139.9	159.1	115.9	134.3	152.6	110.5	128.0	145.6	104.4	121.0	137.6
		62	TC	146.8	146.8	168.6	141.1	141.1	163.7	136.2	136.2	154.3	128.2	128.2	151.6	121.1	121.1	143.3
			SHC	117.5	143.0	168.6	113.8	138.8	163.7	107.8	131.0	154.3	104.8	128.2	151.6	99.0	121.1	143.3
		67	TC	162.1	162.1	162.1	155.1	155.1	155.1	147.4	147.4	147.4	139.0	139.0	139.0	129.7	129.7	131.3
			SHC	92.5	118.4	144.2	89.8	115.6	141.4	86.8	112.6	138.3	83.6	109.3	135.0	80.0	105.7	131.3
		72	TC	178.4	178.4	178.4	170.7	170.7	170.7	162.3	162.3	162.3	152.9	152.9	152.9	142.7	142.7	142.7
			SHC	66.5	92.1	117.7	63.7	89.3	114.8	60.7	86.2	111.6	57.5	82.8	108.2	53.9	79.1	104.3
		76	TC	—	190.1	190.1	—	181.5	181.5	—	171.8	171.8	—	161.5	161.5	—	150.1	150.1
			SHC	—	70.1	94.8	—	67.2	91.7	—	64.0	88.3	—	60.5	84.5	—	56.7	80.3
5650 cfm	EAT (wb)	58	TC	151.3	151.3	171.8	145.9	145.9	165.7	140.0	140.0	159.0	133.3	133.3	151.4	125.8	125.8	142.9
			SHC	130.8	151.3	171.8	126.1	145.9	165.7	121.0	140.0	159.0	115.2	133.3	151.4	108.7	125.8	142.9
		62	TC	153.7	153.7	172.8	148.6	148.6	165.1	140.1	140.1	165.5	133.4	133.4	157.6	125.9	125.9	148.8
			SHC	121.3	147.0	172.8	116.2	140.6	165.1	114.7	140.1	165.5	109.2	133.4	157.6	103.1	125.9	148.8
		67	TC	165.4	165.4	165.4	158.2	158.2	158.2	150.3	150.3	150.3	141.6	141.6	146.2	132.0	132.0	142.4
			SHC	97.9	126.8	155.7	95.2	124.0	152.8	92.1	120.9	149.6	88.9	117.5	146.2	85.3	113.8	142.4
		72	TC	181.5	181.5	181.5	173.5	173.5	173.5	164.8	164.8	164.8	155.1	155.1	155.1	144.5	144.5	144.5
			SHC	68.4	96.9	125.5	65.6	94.0	122.5	62.6	90.9	119.2	59.3	87.4	115.5	55.6	83.5	111.3
		76	TC	—	192.4	192.4	—	183.4	183.4	—	173.5	173.5	—	162.9	162.9	—	150.9	150.9
			SHC	—	71.9	99.2	—	68.9	95.9	—	65.6	92.3	—	62.0	88.3	—	57.9	83.6
6250 cfm	EAT (wb)	58	TC	156.3	156.3	177.4	150.7	150.7	171.0	144.4	144.4	163.9	137.4	137.4	156.0	129.6	129.6	147.1
			SHC	135.2	156.3	177.4	130.3	150.7	171.0	124.9	144.4	163.9	118.8	137.4	156.0	112.0	129.6	147.1
		62	TC	159.2	159.2	175.9	150.8	150.8	178.0	144.5	144.5	170.6	137.5	137.5	162.3	129.7	129.7	153.2
			SHC	124.2	150.0	175.9	123.7	150.8	178.0	118.5	144.5	170.6	112.7	137.5	162.3	106.2	129.7	153.2
		67	TC	168.0	168.0	168.0	160.5	160.5	162.9	152.4	152.4	159.7	143.5	143.5	156.2	133.8	133.8	152.3
			SHC	102.8	134.3	165.9	99.9	131.4	162.9	96.9	128.3	159.7	93.6	124.9	156.2	90.0	121.1	152.3
		72	TC	183.8	183.8	183.8	175.6	175.6	175.6	166.6	166.6	166.6	156.7	156.7	156.7	145.8	145.8	145.8
			SHC	70.0	101.2	132.3	67.2	98.2	129.2	64.1	94.9	125.8	60.7	91.3	121.9	57.0	87.2	117.4
		76	TC	—	193.9	193.9	—	184.6	184.6	—	174.7	174.7	—	163.5	163.5	—	151.3	151.3
			SHC	—	73.3	102.7	—	70.2	99.3	—	66.8	95.6	—	63.0	91.2	—	58.7	86.2

LEGEND

— — Do Not Operate
cfm — Cubic Feet Per Minute (Supply Air)
EAT (db) — Entering Air Temperature (dry bulb)
EAT (wb) — Entering Air Temperature (wet bulb)
SHC — Sensible Heat Capacity (1000 Btuh) Gross
TC — Total Capacity (1000 Btuh) Gross

NOTE: See minimum-maximum airflow ratings on page 8.

48/50GC**14 Single Stage Cooling Capacities

48/50GC**14				AMBIENT TEMPERATURE (°F)														
				85			95			105			115			125		
				EAT (db)			EAT (db)			EAT (db)			EAT (db)			EAT (db)		
				75	80	85	75	80	85	75	80	85	75	80	85	75	80	85
2475 cfm	EAT (wb)	58	TC	82.7	82.7	94.1	78.1	78.1	89.1	73.1	73.1	83.7	67.9	67.9	78.1	62.5	62.5	72.2
			SHC	71.3	82.7	94.1	67.1	78.1	89.1	62.6	73.1	83.7	57.8	67.9	78.1	52.9	62.5	72.2
		62	TC	86.8	86.8	90.8	81.2	81.2	87.2	75.3	75.3	83.5	69.1	69.1	79.6	63.7	63.7	72.8
			SHC	64.7	77.8	90.8	61.2	74.2	87.2	57.5	70.5	83.5	53.7	66.6	79.6	48.6	60.7	72.8
		67	TC	96.3	96.3	96.3	90.8	90.8	90.8	84.5	84.5	84.5	77.9	77.9	77.9	70.9	70.9	70.9
			SHC	52.5	65.5	78.6	49.2	62.2	75.3	45.5	58.6	71.6	41.8	54.8	67.8	37.9	50.9	63.9
		72	TC	106.2	106.2	106.2	101.0	101.0	101.0	94.4	94.4	94.4	87.3	87.3	87.3	79.9	79.9	79.9
			SHC	39.9	52.9	65.8	36.8	49.8	62.7	33.2	46.1	59.1	29.5	42.4	55.3	25.6	38.5	51.4
		76	TC	—	114.8	114.8	—	109.2	109.2	—	102.1	102.1	—	94.5	94.5	—	86.5	86.5
			SHC	—	42.6	55.2	—	39.5	52.1	—	35.9	48.4	—	32.1	44.6	—	28.1	40.6
2904 cfm	EAT (wb)	58	TC	88.2	88.2	100.2	83.4	83.4	95.0	78.1	78.1	89.3	72.6	72.6	83.3	66.9	66.9	77.0
			SHC	76.2	88.2	100.2	71.8	83.4	95.0	67.0	78.1	89.3	62.0	72.6	83.3	56.7	66.9	77.0
		62	TC	89.9	89.9	101.0	84.4	84.4	97.3	80.0	80.0	88.7	74.4	74.4	82.5	66.9	66.9	80.5
			SHC	70.8	85.9	101.0	67.3	82.3	97.3	61.4	75.0	88.7	56.5	69.5	82.5	53.4	66.9	80.5
		67	TC	99.2	99.2	99.2	93.9	93.9	93.9	87.3	87.3	87.3	80.4	80.4	80.4	73.2	73.2	73.2
			SHC	56.4	71.6	86.8	53.2	68.3	83.5	49.5	64.6	79.7	45.7	60.8	75.9	41.7	56.8	71.9
		72	TC	109.1	109.1	109.1	104.1	104.1	104.1	97.1	97.1	97.1	89.7	89.7	89.7	82.0	82.0	82.0
			SHC	41.6	56.7	71.7	38.6	53.6	68.6	34.9	49.9	64.9	31.1	46.1	61.0	27.2	42.1	57.0
		76	TC	—	118.1	118.1	—	111.9	111.9	—	104.4	104.4	—	96.4	96.4	—	88.0	88.0
			SHC	—	44.7	59.2	—	41.4	55.9	—	37.6	52.1	—	33.7	48.1	—	29.7	43.8
3300 cfm	EAT (wb)	58	TC	92.5	92.5	105.0	87.5	87.5	99.5	82.0	82.0	93.6	76.2	76.2	87.2	70.1	70.1	80.6
			SHC	80.0	92.5	105.0	75.4	87.4	99.5	70.4	82.0	93.6	65.1	76.2	87.2	59.6	70.1	80.6
		62	TC	93.0	93.0	107.3	89.3	89.3	98.7	82.1	82.1	97.6	76.3	76.3	91.1	70.2	70.2	84.3
			SHC	74.9	91.1	107.3	69.2	83.9	98.7	66.6	82.1	97.6	61.5	76.3	91.1	56.2	70.2	84.3
		67	TC	101.1	101.1	101.1	96.0	96.0	96.0	89.3	89.3	89.3	82.2	82.2	83.0	74.8	74.8	79.0
			SHC	59.8	76.9	93.9	56.7	73.7	90.7	52.9	69.9	86.9	49.1	66.0	83.0	45.1	62.0	79.0
		72	TC	111.2	111.2	111.2	106.1	106.1	106.1	99.0	99.0	99.0	91.4	91.4	91.4	83.5	83.5	83.5
			SHC	43.0	59.9	76.8	40.0	56.9	73.8	36.3	53.1	70.0	32.4	49.2	66.0	28.5	45.2	61.9
		76	TC	—	120.4	120.4	—	113.6	113.6	—	105.9	105.9	—	97.6	97.6	—	—	—
			SHC	—	46.4	62.6	—	42.9	59.0	—	39.0	55.1	—	35.0	50.8	—	—	—
3729 cfm	EAT (wb)	58	TC	96.5	96.5	109.4	91.2	91.2	103.6	85.5	85.5	97.5	79.4	79.4	90.9	73.1	73.1	84.0
			SHC	83.5	96.5	109.4	78.7	91.2	103.6	73.5	85.5	97.5	68.0	79.4	90.9	62.3	73.1	84.0
		62	TC	96.5	96.5	113.8	91.3	91.3	107.9	85.6	85.6	101.6	79.5	79.5	94.8	73.2	73.2	87.7
			SHC	79.3	96.5	113.8	74.6	91.3	107.9	69.6	85.6	101.6	64.3	79.5	94.8	58.7	73.2	87.7
		67	TC	102.8	102.8	102.8	97.9	97.9	98.4	91.1	91.1	94.5	83.8	83.8	90.5	76.2	76.2	86.3
			SHC	63.3	82.4	101.4	60.3	79.3	98.4	56.5	75.5	94.5	52.6	71.5	90.5	48.6	67.4	86.3
		72	TC	113.0	113.0	113.0	107.9	107.9	107.9	100.6	100.6	100.6	92.8	92.8	92.8	84.7	84.7	84.7
			SHC	44.4	63.3	82.1	41.4	60.3	79.1	37.7	56.4	75.2	33.8	52.4	71.1	29.8	48.3	66.8
		76	TC	—	122.2	122.2	—	114.9	114.9	—	106.9	106.9	—	—	—	—	—	—
			SHC	—	48.0	65.9	—	44.2	62.0	—	40.3	57.9	—	—	—	—	—	—
4125 cfm	EAT (wb)	58	TC	99.6	99.6	112.9	94.1	94.1	106.9	88.2	88.2	100.5	82.0	82.0	93.7	75.5	75.5	86.6
			SHC	86.3	99.6	112.9	81.3	94.1	106.9	75.9	88.2	100.5	70.3	82.0	93.7	64.4	75.5	86.6
		62	TC	99.7	99.7	117.4	94.2	94.2	111.3	88.3	88.3	104.7	82.1	82.1	97.7	75.5	75.5	90.4
			SHC	81.9	99.7	117.4	77.1	94.2	111.3	71.9	88.3	104.7	66.4	82.1	97.7	60.7	75.5	90.4
		67	TC	105.7	105.7	108.9	99.3	99.3	105.2	92.4	92.4	101.2	85.0	85.0	97.1	77.3	77.3	92.7
			SHC	67.1	88.0	108.9	63.5	84.3	105.2	59.7	80.4	101.2	55.7	76.4	97.1	51.6	72.1	92.7
		72	TC	114.3	114.3	114.3	109.2	109.2	109.2	101.8	101.8	101.8	93.9	93.9	93.9	85.5	85.5	85.5
			SHC	45.6	66.2	86.8	42.6	63.2	83.7	38.9	59.3	79.8	34.9	55.2	75.6	30.8	51.0	71.1
		76	TC	—	123.4	123.4	—	—	—	—	—	—	—	—	—	—	—	—
			SHC	—	49.2	68.7	—	—	—	—	—	—	—	—	—	—	—	—

LEGEND

— — Do Not Operate
cfm — Cubic Feet Per Minute (Supply Air)
EAT (db) — Entering Air Temperature (dry bulb)
EAT (wb) — Entering Air Temperature (wet bulb)
SHC — Sensible Heat Capacity (1000 Btuh) Gross
TC — Total Capacity (1000 Btuh) Gross

NOTE: See minimum-maximum airflow ratings on page 8.

48/50GC*N14 — Unit with Humidi-MiZer® System in Subcooling Mode — Cooling Capacities

TEMP (°F) AIR ENTERING CONDENSER (Edb)		AIR ENTERING EVAPORATOR — SCFM/BF (80°F db)								
		3750/0.04			5000/0.09			6250/0.15		
		Air Entering Evaporator — Ewb (°F)								
		72	67	62	72	67	62	72	67	62
75	TC	158.3	151.2	136.0	178.3	153.2	139.0	185.1	155.2	145.9
	SHC	61.1	89.1	106.6	80.2	97.3	123.4	110.4	105.7	142.6
	kW	8.1	8.2	8.1	8.5	8.1	8.0	8.9	8.0	8.0
85	TC	158.4	142.2	128.4	159.8	145.5	138.0	164.6	158.1	144.0
	SHC	61.0	80.4	99.5	62.1	89.9	122.4	68.8	111.0	140.1
	kW	9.3	9.1	9.0	9.2	9.1	9.0	9.2	9.3	9.1
95	TC	143.1	128.8	115.6	156.8	141.5	124.6	162.4	146.8	134.9
	SHC	46.4	67.2	87.0	59.2	86.2	109.7	66.5	100.0	118.5
	kW	10.2	10.1	9.9	10.4	10.2	10.0	10.5	10.3	10.1
105	TC	132.8	119.0	107.1	141.6	131.5	115.1	144.3	133.0	121.3
	SHC	36.7	58.0	78.9	44.9	76.8	100.9	49.1	87.0	115.5
	kW	11.4	11.3	11.1	11.5	11.4	11.2	11.5	11.4	11.2
115	TC	126.8	113.4	101.4	134.3	120.8	106.4	134.1	122.1	113.5
	SHC	31.5	53.1	74.4	38.3	67.0	93.1	39.6	77.0	99.5
	kW	12.7	12.6	12.4	12.9	12.6	12.4	12.9	12.7	12.5
125	TC	115.0	101.5	89.1	121.6	107.2	95.7	125.8	111.7	101.3
	SHC	21.0	42.4	63.4	26.8	54.7	83.7	32.1	67.7	97.6
	kW	14.1	13.9	13.7	14.2	14.0	13.8	14.3	14.1	13.8

48/50GC*N14 — Unit with Humidi-MiZer System in Hot Gas Reheat Mode — Cooling Capacities

TEMP (°F) AIR ENTERING CONDENSER (Edb)		AIR ENTERING EVAPORATOR — Ewb (°F)								
		75 Dry Bulb 62.5 Wet Bulb (50% Relative)			75 Dry Bulb 64 Wet Bulb (56% Relative)			75 Dry Bulb 65.3 Wet Bulb (60% Relative)		
		Air Entering Evaporator — cfm								
		3750	5000	6250	3750	5000	6250	3750	5000	6250
80	TC	66.3	66.8	67.0	67.3	68.0	67.0	72.2	70.2	68.1
	SHC	19.7	14.3	12.9	20.0	14.5	12.9	21.5	15.0	13.1
	kW	8.0	8.0	8.0	8.0	8.0	8.0	8.0	8.0	8.0
75	TC	68.4	71.3	69.4	73.6	72.0	70.8	72.5	72.7	71.7
	SHC	21.9	19.7	13.6	23.6	19.9	13.9	23.2	20.0	14.1
	kW	8.0	8.0	8.0	8.0	8.0	8.0	8.0	8.0	8.0
70	TC	72.9	74.0	74.4	75.4	74.0	73.5	74.5	75.9	75.2
	SHC	26.2	21.7	16.2	27.1	21.7	16.0	26.8	22.2	16.4
	kW	8.0	8.0	8.0	8.0	8.0	8.0	8.0	8.0	8.0
60	TC	75.9	84.4	78.6	78.0	85.6	78.4	87.0	85.8	84.6
	SHC	29.4	26.9	25.4	30.2	27.2	25.3	33.7	27.3	27.3
	kW	8.0	8.0	8.0	8.0	8.0	8.0	8.0	8.0	8.0
50	TC	81.8	88.7	85.3	89.0	89.6	84.5	89.0	86.3	92.6
	SHC	35.2	35.3	28.9	38.3	35.6	28.6	38.3	34.3	31.3
	kW	8.0	8.0	8.0	8.0	8.0	8.0	8.0	8.0	8.0
40	TC	98.3	91.3	94.7	89.6	92.7	93.9	97.5	99.4	98.2
	SHC	51.2	36.8	37.3	46.7	37.4	36.9	50.8	40.1	38.6
	kW	8.0	8.0	8.0	8.0	8.0	8.0	8.0	8.0	8.0

LEGEND

Ewb — Entering wet bulb
kW — compressor Power Input
SCFM/BF — Standard Cubic Feet per Minute/Bypass Factor
SHC — Sensible Heat Capacity (1000 Btuh) Gross
TC — Total Capacity (1000 Btuh) Gross

Pressure Drops for Electric Heating Units

6 Ton Units

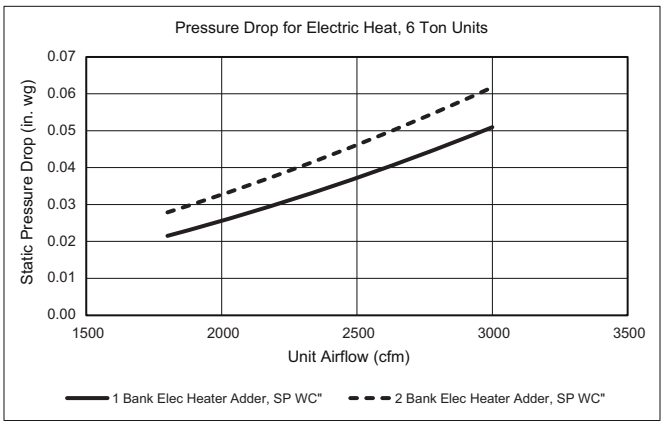

7.5 to 10 Ton Units

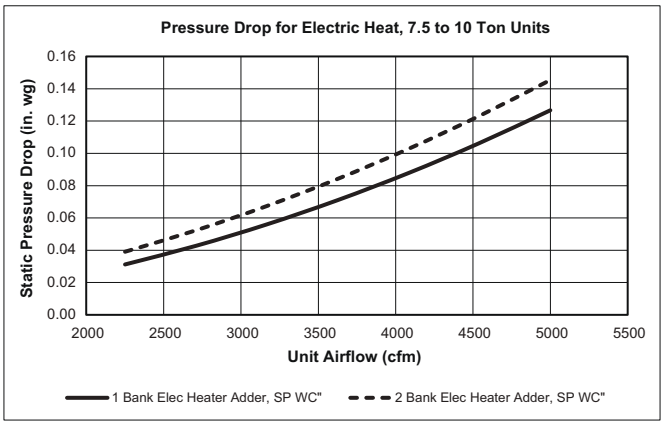

12.5 Ton Units

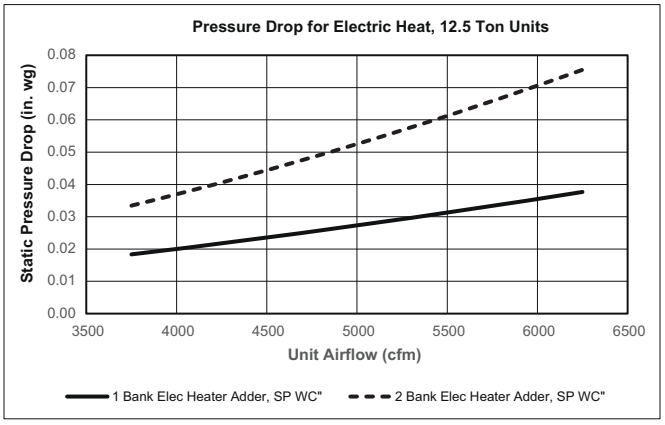

Pressure Drops for Gas Heating Units

Gas Heat Stages

48GC UNIT SIZE	HEAT SIZE		
	LOW	MEDIUM	HIGH
07	2	2	2
08	2	2	2
09	2	2	2
12	2	2	2
14	2	2	2

Gas Heat Static Pressure Deductions (in. wg) — 6.0 to 8.5 Ton Units

CFM	1800	2210	2615	3025	3435	3840	4250
High Gas Heat Deduction	–0.04	–0.04	–0.03	–0.03	–0.02	–0.01	0.01
Medium Gas Heat Deduction	0.00	0.01	0.02	0.03	0.04	0.06	0.08
Low Gas Heat Deduction	0.02	0.03	0.05	0.07	0.09	0.12	0.15

Gas Heat Static Pressure Deductions (in. wg) — 10 Ton Units

CFM	3000	3335	3665	4000	4335	4665	5000
Medium Gas Heat Deduction	0.00	0.01	0.02	0.03	0.05	0.06	0.07
Low Gas Heat Deduction	–0.03	–0.01	0.01	0.03	0.06	0.08	0.12

Gas Heat Static Pressure Deductions (in. wg) — 12.5 Ton Units

CFM	3750	4165	4585	5000	5415	5835	6250
High Gas Heat Deduction	0.10	0.11	0.12	0.14	0.15	0.17	0.18
Medium Gas Heat Deduction	0.17	0.19	0.21	0.24	0.26	0.28	0.30
Low Gas Heat Deduction	0.16	0.18	0.20	0.22	0.24	0.26	0.28

Field-Installed Accessory Electric Heater Data

50GC UNIT SIZE	VOLTAGE	HEATER MODEL NUMBER	NUMBER OF STAGES
07	208/230	CRHEATER410A00 CRHEATER411A00 CRHEATER412A00 CRHEATER413A00 CRHEATER414A00	2
	460	CRHEATER418A00 CRHEATER419A00 CRHEATER420A00 CRHEATER421A00	2
	575	CRHEATER425A00 CRHEATER426A00	2
08	208/230	CRHEATER411A00 CRHEATER412A00 CRHEATER414A00 CRHEATER415A00 CRHEATER416A00	2
	460	CRHEATER419A00 CRHEATER420A00 CRHEATER421A00 CRHEATER422A00 CRHEATER423A00	2
	575	CRHEATER425A00 CRHEATER427A00	2
09	208/230	CRHEATER411A00 CRHEATER412A00 CRHEATER414A00 CRHEATER415A00 CRHEATER416A00	2
	460	CRHEATER419A00 CRHEATER420A00 CRHEATER421A00 CRHEATER422A00 CRHEATER423A00	2
	575	CRHEATER425A00 CRHEATER427A00	2
12	208/230	CRHEATER411A00 CRHEATER412A00 CRHEATER415A00 CRHEATER416A00 CRHEATER417A00	2
	460	CRHEATER420A00 CRHEATER422A00 CRHEATER423A00 CRHEATER424A00	2
	575	CRHEATER425A00 CRHEATER427A00 CRHEATER428A00	2

Field-Installed Accessory Electric Heater Data (cont)

50GC UNIT SIZE	VOLTAGE	HEATER MODEL NUMBER	NUMBER OF STAGES
14	208/230	CRHEATER412A00 CRHEATER414A00 CRHEATER415A00 CRHEATER416A00 CRHEATER417A00	2
	460	CRHEATER420A00 CRHEATER421A00 CRHEATER422A00 CRHEATER423A00 CRHEATER424A00	2
	575	CRHEATER425A00 CRHEATER426A00 CRHEATER427A00 CRHEATER428A00	2

Economizer Barometric Relief and Damper Leakage — 6 to 10 Ton Units (Sizes 07-12)

Horizontal Economizer Barometric Relief

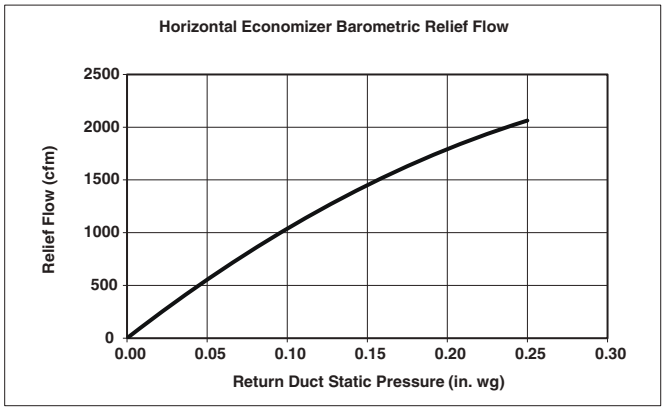

Vertical Economizer Barometric Relief

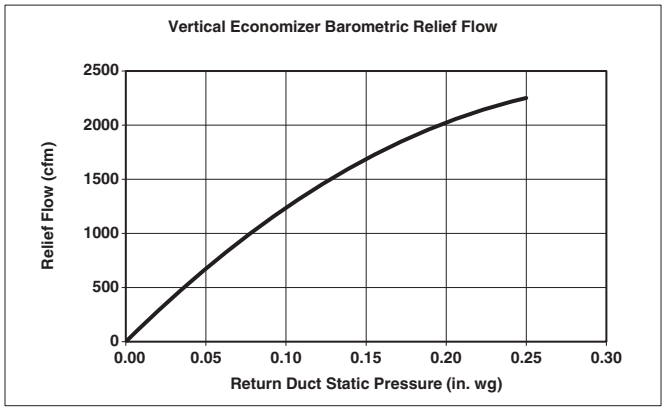

Horizontal Economizer Damper Leakage

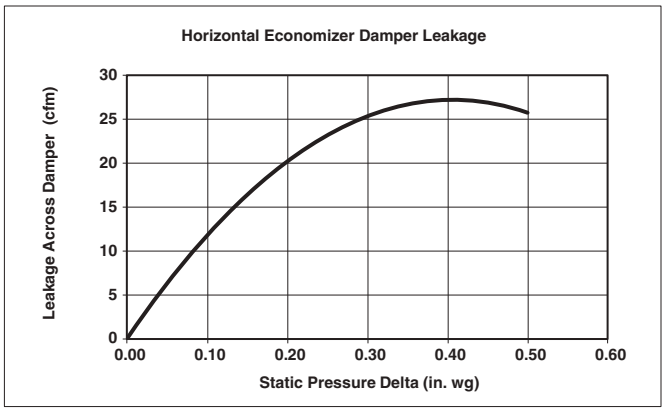

Vertical Economizer Damper Leakage

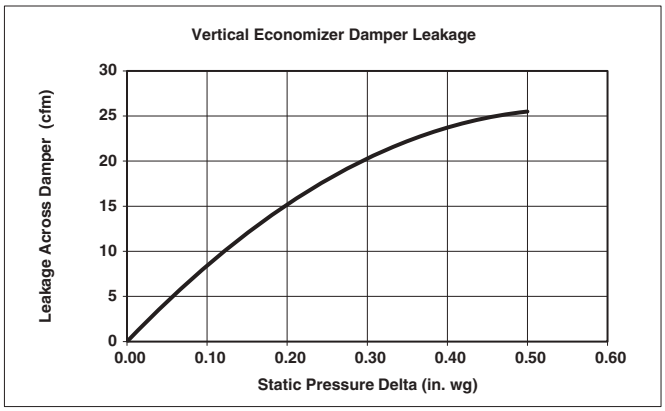

Economizer Barometric Relief and Damper Leakage — 12.5 Ton Units (Size 14)

Horizontal Economizer Barometric Relief

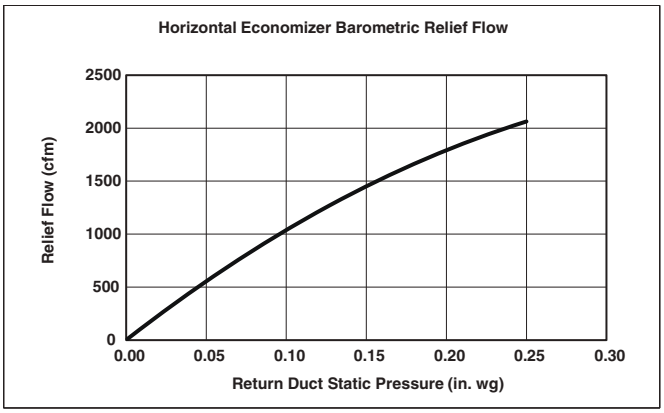

Vertical Economizer Barometric Relief

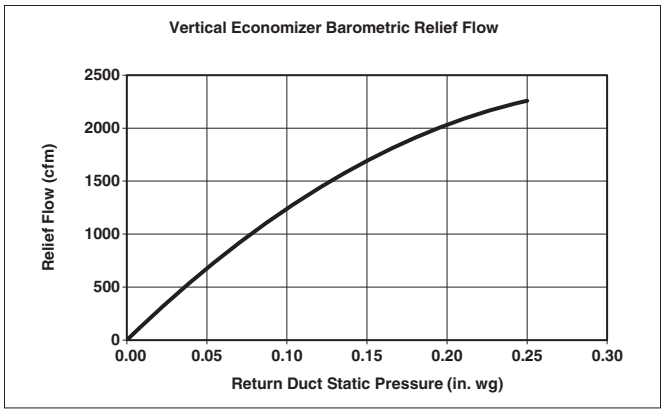

Horizontal Economizer Damper Leakage

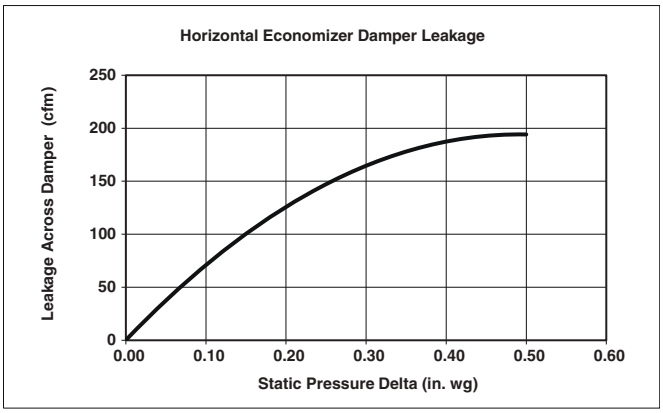

Vertical Economizer Damper Leakage

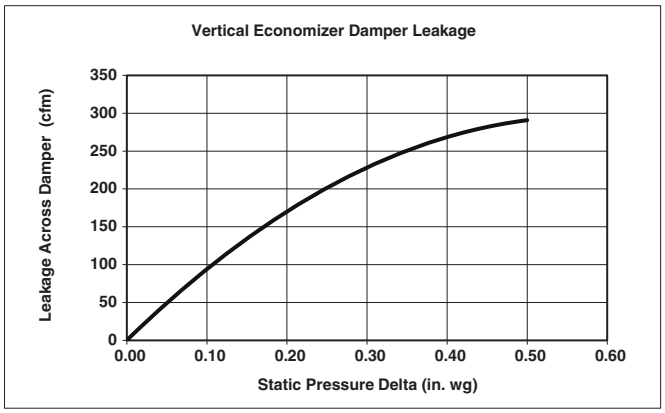

Economizer Pressure Drop 6 to 12.5 Ton Units

6 to 10 Ton Units (Sizes 07-12)

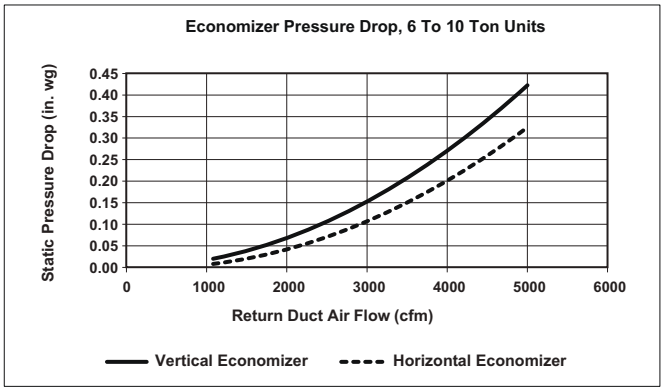

12.5 Ton Units (Size 14)

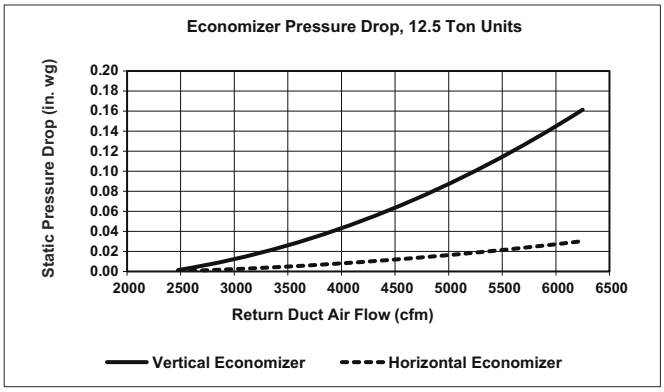

Humidi-MiZer® Coil Pressure Drops — 6 to 12.5 Ton Units

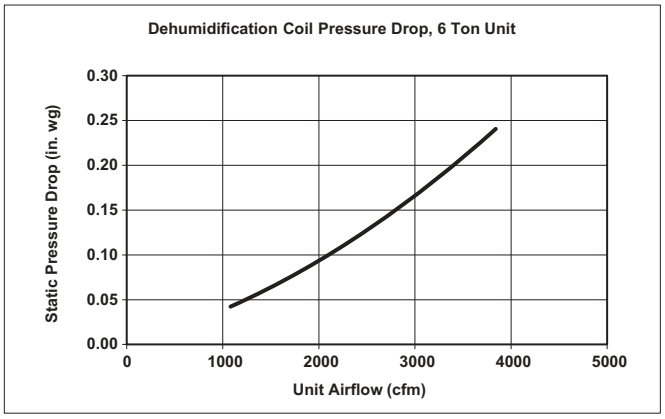

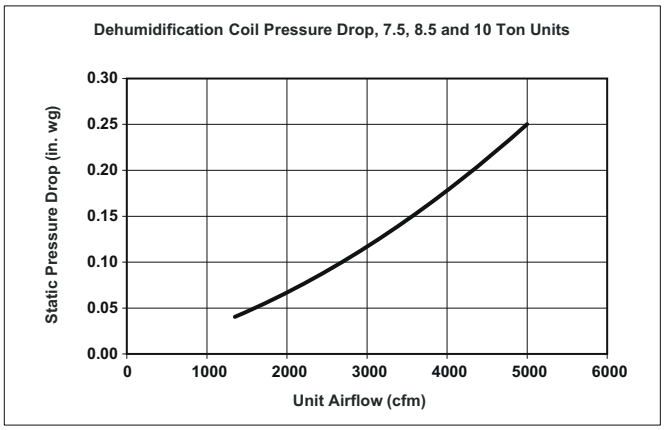

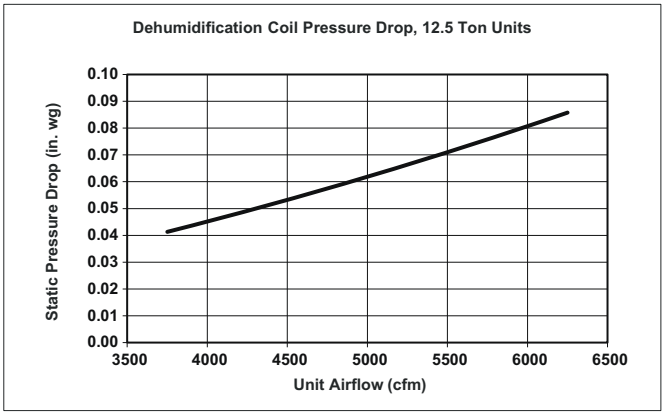

General Fan Performance Notes

1. Interpolation is permissible. Do not extrapolate.
2. External static pressure is the static pressure difference between the return duct and the supply duct plus the static pressure caused by any FIOPs or accessories.
3. Tabular data accounts for pressure loss due to clean filters, unit casing, wet coils, and highest gas heat exchanger (when gas heat unit).
4. Factory options and accessories may effect static pressure losses. Gas heat unit fan tables assume highest gas heat models; for fan selections with low or medium heat models, the user must deduct low and medium heat static pressures. Selection software is available, through your salesperson, to help you select the best motor/drive combination for your application.
5. The fan performance tables offer motor/drive recommendations. In cases when two motor/drive combinations would work, the lower horsepower option is recommended.
6. For information on the electrical properties of the fan motors, please see the Electrical information section of this book.
7. For more information on the performance limits of the fan motors, see the application data section of this book.
8. The EPACT (Energy Policy Act of 1992) regulates energy requirements for specific types of indoor fan motors. Motors regulated by EPACT include any general purpose, T-frame (three-digit, 143 and larger), single-speed, foot mounted, polyphase, squirrel cage induction motors of NEMA (National Electrical Manufacturers Association) design A and B, manufactured for use in the United States. Ranging from 1 to 200 Hp, these continuous-duty motors operate on 230 and 460 volt, 60 Hz power. If a motor does not fit into these specifications, the motor does not have to be replaced by an EPACT compliant energy-efficient motor. Variable-speed motors are exempt from EPACT compliance requirements.

48GCFM07 — 6 Ton Vertical Supply (rpm-bhp)

CFM	AVAILABLE EXTERNAL STATIC PRESSURE (in. wg)									
	0.2		0.4		0.6		0.8		1.0	
	rpm	bhp	rpm	bhp	rpm	bhp	rpm	bhp	rpm	bhp
1800	892	0.27	1029	0.41	1148	0.57	1255	0.75	1353	0.94
1950	942	0.32	1073	0.47	1188	0.63	1293	0.82	1388	1.01
2100	993	0.37	1119	0.53	1230	0.70	1332	0.89	1425	1.09
2250	1045	0.43	1166	0.60	1274	0.78	1372	0.97	1463	1.18
2400	1098	0.50	1214	0.67	1318	0.86	1413	1.06	1503	1.28
2550	1151	0.57	1263	0.75	1364	0.95	1456	1.16	1543	1.38
2700	1205	0.65	1313	0.84	1410	1.04	1501	1.26	1585	1.48
2850	1259	0.74	1363	0.94	1458	1.15	1546	1.37	1628	1.60
3000	1314	0.83	1415	1.04	1507	1.26	1592	1.48	1672	1.71

CFM	AVAILABLE EXTERNAL STATIC PRESSURE (in. wg)									
	1.2		1.4		1.6		1.8		2.0	
	rpm	bhp	rpm	bhp	rpm	bhp	rpm	bhp	rpm	bhp
1800	1444	1.14	1529	1.35	1608	1.57	1683	1.81	1755	2.05
1950	1477	1.22	1561	1.44	1639	1.67	1714	1.90	1785	2.15
2100	1512	1.31	1594	1.53	1672	1.77	1746	2.01	1816	2.26
2250	1548	1.40	1629	1.63	1705	1.87	1778	2.12	1848	2.38
2400	1586	1.50	1665	1.73	1740	1.98	1812	2.24	1881	2.50
2550	1625	1.61	1702	1.85	1776	2.10	1847	2.36	1914	2.62
2700	1665	1.72	1741	1.97	1813	2.22	1883	2.49	1949	2.76
2850	1706	1.84	1781	2.09	1852	2.35	1920	2.62	1985	2.89
3000	1749	1.96	1821	2.22	1891	2.48	1958	2.75	2022	3.03

Std/Med Static 892-2000 rpm, 2.4 Max bhp

High Static 892-2200 rpm, 3.0 Max bhp

48GCFM07 — Standard/Medium Static — 6 Ton Vertical Supply (rpm-vdc)

CFM	AVAILABLE EXTERNAL STATIC PRESSURE (in. wg)									
	0.2		0.4		0.6		0.8		1.0	
	rpm	vdc	rpm	vdc	rpm	vdc	rpm	vdc	rpm	vdc
1800	892	4.3	1029	5.0	1148	5.6	1255	6.2	1353	6.7
1950	942	4.6	1073	5.2	1188	5.8	1293	6.4	1388	6.9
2100	993	4.8	1119	5.5	1230	6.0	1332	6.6	1425	7.0
2250	1045	5.1	1166	5.7	1274	6.3	1372	6.8	1463	7.2
2400	1098	5.4	1214	6.0	1318	6.5	1413	7.0	1503	7.4
2550	1151	5.6	1263	6.2	1364	6.7	1456	7.2	1543	7.6
2700	1205	5.9	1313	6.5	1410	7.0	1501	7.4	1585	7.9
2850	1259	6.2	1363	6.7	1458	7.2	1546	7.7	1628	8.1
3000	1314	6.5	1415	7.0	1507	7.5	1592	7.9	1672	8.3

CFM	AVAILABLE EXTERNAL STATIC PRESSURE (in. wg)									
	1.2		1.4		1.6		1.8		2.0	
	rpm	vdc	rpm	vdc	rpm	vdc	rpm	vdc	rpm	vdc
1800	1444	7.1	1529	7.6	1608	8.0	1683	8.4	1755	8.7
1950	1477	7.3	1561	7.7	1639	8.1	1714	8.5	1785	8.9
2100	1512	7.5	1594	7.9	1672	8.3	1746	8.7	1816	9.1
2250	1548	7.7	1629	8.1	1705	8.5	1778	8.9	1848	9.2
2400	1586	7.9	1665	8.3	1740	8.7	1812	9.0	1881	9.4
2550	1625	8.1	1702	8.5	1776	8.8	1847	9.2	—	—
2700	1665	8.3	1741	8.7	1813	9.0	1883	9.4	—	—
2850	1706	8.5	1781	8.9	1852	9.2	—	—	—	—
3000	1749	8.7	1821	9.1	1891	9.4	—	—	—	—

Std/Med Static 892-2000 rpm

48GCFM07 — High Static — 6 Ton Vertical Supply (rpm-vdc)

CFM	AVAILABLE EXTERNAL STATIC PRESSURE (in. wg)									
	0.2		0.4		0.6		0.8		1.0	
	rpm	vdc	rpm	vdc	rpm	vdc	rpm	vdc	rpm	vdc
1800	892	4.0	1029	4.6	1148	5.1	1255	5.6	1353	6.1
1950	942	4.2	1073	4.8	1188	5.3	1293	5.8	1388	6.3
2100	993	4.4	1119	5.0	1230	5.5	1332	6.0	1425	6.4
2250	1045	4.7	1166	5.2	1274	5.7	1372	6.2	1463	6.6
2400	1098	4.9	1214	5.4	1318	5.9	1413	6.4	1503	6.8
2550	1151	5.2	1263	5.7	1364	6.1	1456	6.6	1543	7.0
2700	1205	5.4	1313	5.9	1410	6.4	1501	6.8	1585	7.2
2850	1259	5.7	1363	6.1	1458	6.6	1546	7.0	1628	7.4
3000	1314	5.9	1415	6.4	1507	6.8	1592	7.2	1672	7.6

CFM	AVAILABLE EXTERNAL STATIC PRESSURE (in. wg)									
	1.2		1.4		1.6		1.8		2.0	
	rpm	vdc	rpm	vdc	rpm	vdc	rpm	vdc	rpm	vdc
1800	1444	6.5	1529	6.9	1608	7.3	1683	7.6	1755	7.9
1950	1477	6.7	1561	7.1	1639	7.4	1714	7.8	1785	8.1
2100	1512	6.8	1594	7.2	1672	7.6	1746	7.9	1816	8.2
2250	1548	7.0	1629	7.4	1705	7.7	1778	8.1	1848	8.4
2400	1586	7.2	1665	7.5	1740	7.9	1812	8.2	1881	8.5
2550	1625	7.3	1702	7.7	1776	8.0	1847	8.4	1914	8.7
2700	1665	7.5	1741	7.9	1813	8.2	1883	8.5	1949	8.8
2850	1706	7.7	1781	8.1	1852	8.4	1920	8.7	1985	9.0
3000	1749	7.9	1821	8.3	1891	8.6	1958	8.9	2022	9.2

High Static 892-2200 rpm

48GCFM08 — 7.5 Ton Vertical Supply (rpm-bhp)

CFM	AVAILABLE EXTERNAL STATIC PRESSURE (in. wg)									
	0.2		0.4		0.6		0.8		1.0	
	rpm	bhp	rpm	bhp	rpm	bhp	rpm	bhp	rpm	bhp
2250	1001	0.37	1118	0.52	1225	0.69	1323	0.86	1414	1.06
2440	1065	0.45	1176	0.60	1278	0.77	1373	0.96	1460	1.15
2625	1129	0.53	1234	0.69	1331	0.87	1422	1.06	1508	1.26
2815	1196	0.62	1295	0.79	1388	0.97	1475	1.17	1558	1.38
3000	1261	0.72	1355	0.90	1444	1.09	1528	1.29	1608	1.50
3190	1329	0.84	1418	1.02	1503	1.21	1584	1.42	1661	1.64
3375	1396	0.96	1481	1.14	1562	1.34	1640	1.55	1715	1.78
3565	1465	1.09	1546	1.28	1624	1.49	1699	1.70	1771	1.93
3750	1533	1.23	1610	1.42	1685	1.63	1757	1.85	1826	2.08

CFM	AVAILABLE EXTERNAL STATIC PRESSURE (in. wg)									
	1.2		1.4		1.6		1.8		2.0	
	rpm	bhp	rpm	bhp	rpm	bhp	rpm	bhp	rpm	bhp
2250	1498	1.26	1578	1.47	1653	1.69	1724	1.91	1792	2.15
2440	1543	1.36	1620	1.58	1694	1.80	1765	2.04	1832	2.28
2625	1588	1.47	1664	1.69	1736	1.92	1805	2.16	1871	2.41
2815	1636	1.60	1710	1.82	1781	2.06	1849	2.30	1914	2.55
3000	1684	1.72	1757	1.96	1826	2.20	1892	2.44	1957	2.70
3190	1735	1.86	1806	2.10	1873	2.34	1939	2.60	2001	2.86
3375	1786	2.01	1855	2.25	1921	2.50	1985	2.76	2047	3.02
3565	1840	2.16	1907	2.41	1972	2.66	2034	2.92	2094	3.19
3750	1894	2.32	1959	2.56	2022	2.82	2083	3.08	—	—

Std/Med Static 1001-2000 rpm, 2.4 Max bhp

High Static 1001-2200 rpm, 3.0 Max bhp

48GCFM08 — Standard/Medium Static — 7.5 Ton Vertical Supply (rpm-vdc)

CFM	AVAILABLE EXTERNAL STATIC PRESSURE (in. wg)									
	0.2		0.4		0.6		0.8		1.0	
	rpm	vdc	rpm	vdc	rpm	vdc	rpm	vdc	rpm	vdc
2250	1001	4.9	1118	5.5	1225	6.0	1323	6.5	1414	7.0
2440	1065	5.2	1176	5.8	1278	6.3	1373	6.8	1460	7.2
2625	1129	5.5	1234	6.1	1331	6.6	1422	7.0	1508	7.5
2815	1196	5.9	1295	6.4	1388	6.9	1475	7.3	1558	7.7
3000	1261	6.2	1355	6.7	1444	7.1	1528	7.6	1608	8.0
3190	1329	6.5	1418	7.0	1503	7.4	1584	7.9	1661	8.3
3375	1396	6.9	1481	7.3	1562	7.7	1640	8.1	1715	8.5
3565	1465	7.2	1546	7.7	1624	8.1	1699	8.5	1771	8.8
3750	1533	7.6	1610	8.0	1685	8.4	1757	8.8	1826	9.1

CFM	AVAILABLE EXTERNAL STATIC PRESSURE (in. wg)									
	1.2		1.4		1.6		1.8		2.0	
	rpm	vdc	rpm	vdc	rpm	vdc	rpm	vdc	rpm	vdc
2250	1498	7.4	1578	7.8	1653	8.2	1724	8.6	1792	8.9
2440	1543	7.6	1620	8.0	1694	8.4	1765	8.8	1832	9.1
2625	1588	7.9	1664	8.3	1736	8.6	1805	9.0	1871	9.3
2815	1636	8.1	1710	8.5	1781	8.9	1849	9.2	—	—
3000	1684	8.4	1757	8.8	1826	9.1	1892	9.4	—	—
3190	1735	8.6	1806	9.0	1873	9.3	—	—	—	—
3375	1786	8.9	1855	9.3	1921	9.6	—	—	—	—
3565	1840	9.2	1907	9.5	—	—	—	—	—	—
3750	1894	9.5	—	—	—	—	—	—	—	—

Std/Med Static 1001-2000 rpm

48GCFM08 — High Static — 7.5 Ton Vertical Supply (rpm-vdc)

CFM	AVAILABLE EXTERNAL STATIC PRESSURE (in. wg)									
	0.2		0.4		0.6		0.8		1.0	
	rpm	vdc	rpm	vdc	rpm	vdc	rpm	vdc	rpm	vdc
2250	1001	4.5	1118	5.0	1225	5.5	1323	6.0	1414	6.4
2440	1065	4.8	1176	5.3	1278	5.7	1373	6.2	1460	6.6
2625	1129	5.1	1234	5.5	1331	6.0	1422	6.4	1508	6.8
2815	1196	5.4	1295	5.8	1388	6.3	1475	6.7	1558	7.0
3000	1261	5.7	1355	6.1	1444	6.5	1528	6.9	1608	7.3
3190	1329	6.0	1418	6.4	1503	6.8	1584	7.2	1661	7.5
3375	1396	6.3	1481	6.7	1562	7.1	1640	7.4	1715	7.8
3565	1465	6.6	1546	7.0	1624	7.3	1699	7.7	1771	8.0
3750	1533	6.9	1610	7.3	1685	7.6	1757	8.0	1826	8.3

CFM	AVAILABLE EXTERNAL STATIC PRESSURE (in. wg)									
	1.2		1.4		1.6		1.8		2.0	
	rpm	vdc	rpm	vdc	rpm	vdc	rpm	vdc	rpm	vdc
2250	1498	6.8	1578	7.1	1653	7.5	1724	7.8	1792	8.1
2440	1543	7.0	1620	7.3	1694	7.7	1765	8.0	1832	8.3
2625	1588	7.2	1664	7.5	1736	7.9	1805	8.2	1871	8.5
2815	1636	7.4	1710	7.7	1781	8.1	1849	8.4	1914	8.7
3000	1684	7.6	1757	8.0	1826	8.3	1892	8.6	1957	8.9
3190	1735	7.9	1806	8.2	1873	8.5	1939	8.8	2001	9.1
3375	1786	8.1	1855	8.4	1921	8.7	1985	9.0	2047	9.3
3565	1840	8.3	1907	8.6	1972	8.9	2034	9.2	2094	9.5
3750	1894	8.6	1959	8.9	2022	9.2	2083	9.5	—	—

High Static 1001-2200 rpm

48GCFM09 — 8.5 Ton Vertical Supply (rpm-bhp)

CFM	AVAILABLE EXTERNAL STATIC PRESSURE (in. wg)									
	0.2		0.4		0.6		0.8		1.0	
	rpm	bhp	rpm	bhp	rpm	bhp	rpm	bhp	rpm	bhp
2550	1108	0.51	1215	0.67	1314	0.85	1406	1.04	1493	1.24
2765	1183	0.61	1283	0.78	1378	0.97	1466	1.17	1549	1.38
3500	1258	0.73	1352	0.91	1442	1.10	1526	1.30	1606	1.52
3190	1335	0.87	1424	1.05	1509	1.25	1590	1.46	1667	1.69
3400	1411	1.01	1495	1.20	1576	1.41	1654	1.63	1728	1.86
3615	1490	1.18	1570	1.38	1647	1.59	1721	1.82	1792	2.05
3825	1567	1.35	1643	1.56	1716	1.78	1788	2.01	1856	2.25
4040	1647	1.55	1719	1.76	1789	1.98	1857	2.22	1923	2.46
4250	1725	1.74	1794	1.96	1861	2.19	1926	2.43	1990	2.68

CFM	AVAILABLE EXTERNAL STATIC PRESSURE (in. wg)									
	1.2		1.4		1.6		1.8		2.0	
	rpm	bhp	rpm	bhp	rpm	bhp	rpm	bhp	rpm	bhp
2550	1574	1.46	1650	1.68	1723	1.91	1793	2.15	1859	2.40
2765	1628	1.60	1703	1.83	1774	2.07	1842	2.31	1907	2.57
3500	1683	1.75	1755	1.98	1825	2.23	1891	2.48	1955	2.74
3190	1741	1.92	1811	2.16	1879	2.41	1944	2.67	2007	2.94
3400	1799	2.10	1868	2.35	1934	2.61	1997	2.87	2059	3.15
3615	1861	2.30	1927	2.55	1991	2.81	2053	3.08	—	—
3825	1923	2.50	1987	2.76	2049	3.02	—	—	—	—
4040	1987	2.72	2050	2.98	—	—	—	—	—	—
4250	2052	2.94	—	—	—	—	—	—	—	—

Std/Med Static 1108-2000 rpm, 2.4 Max bhp

High Static 1108-2200 rpm, 5.0 Max bhp

48GCFM09 — Standard/Medium Static — 8.5 Ton Vertical Supply (rpm-vdc)

CFM	AVAILABLE EXTERNAL STATIC PRESSURE (in. wg)									
	0.2		0.4		0.6		0.8		1.0	
	rpm	vdc	rpm	vdc	rpm	vdc	rpm	vdc	rpm	vdc
2550	1108	5.4	1215	6.0	1314	6.5	1406	6.9	1493	7.4
2765	1183	5.8	1283	6.3	1378	6.8	1466	7.3	1549	7.7
3500	1258	6.2	1352	6.7	1442	7.1	1526	7.6	1606	8.0
3190	1335	6.6	1424	7.0	1509	7.5	1590	7.9	1667	8.3
3400	1411	7.0	1495	7.4	1576	7.8	1654	8.2	1728	8.6
3615	1490	7.4	1570	7.8	1647	8.2	1721	8.6	1792	8.9
3825	1567	7.8	1643	8.2	1716	8.5	1788	8.9	1856	9.3
4040	1647	8.2	1719	8.6	1789	8.9	1857	9.3	1923	9.6
4250	1725	8.6	1794	8.9	1861	9.3	1926	9.6	—	—

CFM	AVAILABLE EXTERNAL STATIC PRESSURE (in. wg)									
	1.2		1.4		1.6		1.8		2.0	
	rpm	vdc	rpm	vdc	rpm	vdc	rpm	vdc	rpm	vdc
2550	1574	7.8	1650	8.2	1723	8.6	1793	8.9	1859	9.3
2765	1628	8.1	1703	8.5	1774	8.8	1842	9.2	—	—
3500	1683	8.4	1755	8.7	1825	9.1	1891	9.4	—	—
3190	1741	8.7	1811	9.0	1879	9.4	—	—	—	—
3400	1799	9.0	1868	9.3	—	—	—	—	—	—
3615	1861	9.3	1927	9.6	—	—	—	—	—	—
3825	1923	9.6	—	—	—	—	—	—	—	—
4040	—	—	—	—	—	—	—	—	—	—
4250	—	—	—	—	—	—	—	—	—	—

Std/Med Static 1108-2000 rpm

Fan data (cont)

48GCFM09 — High Static — 8.5 Ton Vertical Supply (rpm-vdc)

CFM	AVAILABLE EXTERNAL STATIC PRESSURE (in. wg)									
	0.2		0.4		0.6		0.8		1.0	
	rpm	vdc	rpm	vdc	rpm	vdc	rpm	vdc	rpm	vdc
2550	1108	5.0	1215	5.5	1314	5.9	1406	6.3	1493	6.7
2765	1183	5.3	1283	5.8	1378	6.2	1466	6.6	1549	7.0
3500	1258	5.7	1352	6.1	1442	6.5	1526	6.9	1606	7.3
3190	1335	6.0	1424	6.4	1509	6.8	1590	7.2	1667	7.5
3400	1411	6.4	1495	6.7	1576	7.1	1654	7.5	1728	7.8
3615	1490	6.7	1570	7.1	1647	7.4	1721	7.8	1792	8.1
3825	1567	7.1	1643	7.4	1716	7.8	1788	8.1	1856	8.4
4040	1647	7.4	1719	7.8	1789	8.1	1857	8.4	1923	8.7
4250	1725	7.8	1794	8.1	1861	8.4	1926	8.7	1990	9.0

CFM	AVAILABLE EXTERNAL STATIC PRESSURE (in. wg)									
	1.2		1.4		1.6		1.8		2.0	
	rpm	vdc	rpm	vdc	rpm	vdc	rpm	vdc	rpm	vdc
2550	1574	7.1	1650	7.5	1723	7.8	1793	8.1	1859	8.4
2765	1628	7.4	1703	7.7	1774	8.0	1842	8.3	1907	8.6
3500	1683	7.6	1755	7.9	1825	8.3	1891	8.6	1955	8.9
3190	1741	7.9	1811	8.2	1879	8.5	1944	8.8	2007	9.1
3400	1799	8.1	1868	8.5	1934	8.8	1997	9.1	2059	9.3
3615	1861	8.4	1927	8.7	1991	9.0	2053	9.3	—	—
3825	1923	8.7	1987	9.0	2049	9.3	—	—	—	—
4040	1987	9.0	2050	9.3	—	—	—	—	—	—
4250	2052	9.3	—	—	—	—	—	—	—	—

High Static 1108-2200 rpm

48GCFM12 — 10 Ton Vertical Supply (rpm-bhp)

CFM	AVAILABLE EXTERNAL STATIC PRESSURE (in. wg)									
	0.2		0.4		0.6		0.8		1.0	
	rpm	bhp	rpm	bhp	rpm	bhp	rpm	bhp	rpm	bhp
3000	1266	0.74	1360	0.92	1449	1.12	1534	1.32	1613	1.54
3250	1357	0.91	1444	1.09	1528	1.29	1608	1.51	1684	1.73
3500	1448	1.09	1530	1.28	1609	1.49	1685	1.72	1758	1.95
3750	1539	1.29	1617	1.49	1691	1.71	1764	1.94	1833	2.18
4000	1632	1.51	1705	1.72	1775	1.94	1844	2.18	1911	2.42
4250	1725	1.74	1794	1.96	1861	2.19	1926	2.43	1990	2.68
4500	1818	1.99	1884	2.22	1948	2.45	2010	2.69	2071	2.94
4750	1912	2.25	1974	2.47	2035	2.71	2095	2.96	2153	3.21
5000	2006	2.51	2066	2.74	2124	2.98	2181	3.23	—	—

CFM	AVAILABLE EXTERNAL STATIC PRESSURE (in. wg)									
	1.2		1.4		1.6		1.8		2.0	
	rpm	bhp	rpm	bhp	rpm	bhp	rpm	bhp	rpm	bhp
3000	1689	1.77	1762	2.01	1831	2.25	1897	2.50	1961	2.77
3250	1757	1.97	1827	2.21	1894	2.47	1959	2.73	2021	3.00
3500	1828	2.19	1895	2.44	1960	2.70	2023	2.97	2084	3.25
3750	1900	2.42	1965	2.68	2028	2.95	2089	3.22	2148	3.50
4000	1975	2.67	2038	2.94	2099	3.21	2158	3.49	—	—
4250	2052	2.94	2112	3.20	2171	3.48	—	—	—	—
4500	2130	3.20	2188	3.47	—	—	—	—	—	—
4750	—	—	—	—	—	—	—	—	—	—
5000	—	—	—	—	—	—	—	—	—	—

Std/Med Static 1266-2200 rpm, 3.0 Max bhp

High Static 1266-2200 rpm, 5.0 Max bhp

48GCFM12 — Standard/Medium Static — 10 Ton Vertical Supply (rpm-vdc)

CFM	AVAILABLE EXTERNAL STATIC PRESSURE (in. wg)									
	0.2		0.4		0.6		0.8		1.0	
	rpm	vdc	rpm	vdc	rpm	vdc	rpm	vdc	rpm	vdc
3000	1266	6.2	1360	6.7	1449	7.2	1534	7.6	1613	8.0
3250	1357	6.7	1444	7.1	1528	7.6	1608	8.0	1684	8.4
3500	1448	7.2	1530	7.6	1609	8.0	1685	8.4	1758	8.8
3750	1539	7.6	1617	8.0	1691	8.4	1764	8.8	1833	9.1
4000	1632	8.1	1705	8.5	1775	8.8	1844	9.2	1911	9.5
4250	1725	8.6	1794	8.9	1861	9.3	1926	9.6	—	—
4500	1818	9.1	1884	9.4	1948	9.7	—	—	—	—
4750	1912	9.5	1974	9.9	—	—	—	—	—	—
5000	—	—	—	—	—	—	—	—	—	—

CFM	AVAILABLE EXTERNAL STATIC PRESSURE (in. wg)									
	1.2		1.4		1.6		1.8		2.0	
	rpm	vdc	rpm	vdc	rpm	vdc	rpm	vdc	rpm	vdc
3000	1689	8.4	1762	8.8	1831	9.1	1897	9.5	—	—
3250	1757	8.8	1827	9.1	1894	9.5	—	—	—	—
3500	1828	9.1	1895	9.5	—	—	—	—	—	—
3750	1900	9.5	—	—	—	—	—	—	—	—
4000	—	—	—	—	—	—	—	—	—	—
4250	—	—	—	—	—	—	—	—	—	—
4500	—	—	—	—	—	—	—	—	—	—
4750	—	—	—	—	—	—	—	—	—	—
5000	—	—	—	—	—	—	—	—	—	—

Std/Med Static 1266-2200 rpm

48GCFM12 — High Static — 10 Ton Vertical Supply (rpm-vdc)

CFM	AVAILABLE EXTERNAL STATIC PRESSURE (in. wg)									
	0.2		0.4		0.6		0.8		1.0	
	rpm	vdc	rpm	vdc	rpm	vdc	rpm	vdc	rpm	vdc
3000	1266	5.7	1360	6.1	1449	6.5	1534	6.9	1613	7.3
3250	1357	6.1	1444	6.5	1528	6.9	1608	7.3	1684	7.6
3500	1448	6.5	1530	6.9	1609	7.3	1685	7.6	1758	8.0
3750	1539	6.9	1617	7.3	1691	7.7	1764	8.0	1833	8.3
4000	1632	7.4	1705	7.7	1775	8.0	1844	8.4	1911	8.7
4250	1725	7.8	1794	8.1	1861	8.4	1926	8.7	1990	9.0
4500	1818	8.2	1884	8.5	1948	8.8	2010	9.1	2071	9.4
4750	1912	8.7	1974	9.0	2035	9.2	2095	9.5	2153	9.8
5000	2006	9.1	2066	9.4	2124	9.6	2181	9.9	—	—

CFM	AVAILABLE EXTERNAL STATIC PRESSURE (in. wg)									
	1.2		1.4		1.6		1.8		2.0	
	rpm	vdc	rpm	vdc	rpm	vdc	rpm	vdc	rpm	vdc
3000	1689	7.6	1762	8.0	1831	8.3	1897	8.6	1961	8.9
3250	1757	8.0	1827	8.3	1894	8.6	1959	8.9	2021	9.2
3500	1828	8.3	1895	8.6	1960	8.9	2023	9.2	2084	9.5
3750	1900	8.6	1965	8.9	2028	9.2	2089	9.5	2148	9.8
4000	1975	9.0	2038	9.3	2099	9.5	2158	9.8	—	—
4250	2052	9.3	2112	9.6	2171	9.9	—	—	—	—
4500	2130	9.7	2188	9.9	—	—	—	—	—	—
4750	—	—	—	—	—	—	—	—	—	—
5000	—	—	—	—	—	—	—	—	—	—

High Static 1266-2200 rpm

48GCFM14 — 12.5 Ton Vertical Supply (rpm-bhp)

CFM	AVAILABLE EXTERNAL STATIC PRESSURE (in. wg)									
	0.2		0.4		0.6		0.8		1.0	
	rpm	bhp	rpm	bhp	rpm	bhp	rpm	bhp	rpm	bhp
3750	1076	0.65	1171	0.84	1267	1.07	1361	1.32	1452	1.61
4065	1151	0.80	1238	0.99	1327	1.23	1415	1.49	1501	1.77
4375	1226	0.96	1307	1.17	1389	1.40	1471	1.66	1552	1.96
4690	1303	1.15	1378	1.36	1455	1.61	1532	1.87	1608	2.17
5000	1380	1.36	1450	1.58	1521	1.82	1593	2.09	1665	2.39
5315	1458	1.59	1524	1.82	1591	2.07	1659	2.35	1726	2.64
5625	1536	1.84	1598	2.07	1661	2.33	1725	2.61	1789	2.91
5940	1615	2.11	1674	2.35	1733	2.61	1793	2.89	1854	3.19
6250	1693	2.39	1749	2.64	1805	2.90	1862	3.19	1920	3.49

CFM	AVAILABLE EXTERNAL STATIC PRESSURE (in. wg)									
	1.2		1.4		1.6		1.8		2.0	
	rpm	bhp	rpm	bhp	rpm	bhp	rpm	bhp	rpm	bhp
3750	1539	1.91	1622	2.24	1701	2.59	1776	2.94	1847	3.31
4065	1584	2.08	1664	2.42	1741	2.77	1815	3.13	1885	3.51
4375	1632	2.27	1709	2.61	1783	2.96	1855	3.34	1924	3.73
4690	1683	2.48	1757	2.83	1828	3.18	1898	3.56	1966	3.96
5000	1737	2.72	1807	3.06	1876	3.42	1943	3.80	2009	4.20
5315	1794	2.97	1861	3.31	1927	3.68	1991	4.06	2055	4.46
5625	1853	3.23	1916	3.57	1979	3.94	2041	4.32	2103	4.73
5940	1915	3.52	1975	3.86	2035	4.22	2095	4.61	2154	5.01
6250	1977	3.81	2035	4.16	2093	4.52	2150	4.90	—	—

Std/Med Static 1076-2200 rpm, 3.0 Max bhp

High Static 1076-2200 rpm, 5.0 Max bhp

48GCFM14 — Standard/Medium Static — 12.5 Ton Vertical Supply (rpm-vdc)

CFM	AVAILABLE EXTERNAL STATIC PRESSURE (in. wg)									
	0.2		0.4		0.6		0.8		1.0	
	rpm	vdc	rpm	vdc	rpm	vdc	rpm	vdc	rpm	vdc
3750	1076	4.8	1171	5.3	1267	5.7	1361	6.1	1452	6.5
4065	1151	5.2	1238	5.6	1327	6.0	1415	6.4	1501	6.8
4375	1226	5.5	1307	5.9	1389	6.3	1471	6.6	1552	7.0
4690	1303	5.9	1378	6.2	1455	6.6	1532	6.9	1608	7.3
5000	1380	6.2	1450	6.5	1521	6.9	1593	7.2	1665	7.5
5315	1458	6.6	1524	6.9	1591	7.2	1659	7.5	1726	7.8
5625	1536	6.9	1598	7.2	1661	7.5	1725	7.8	1789	8.1
5940	1615	7.3	1674	7.6	1733	7.8	1793	8.1	1854	8.4
6250	1693	7.7	1749	7.9	1805	8.2	1862	8.4	—	—

CFM	AVAILABLE EXTERNAL STATIC PRESSURE (in. wg)									
	1.2		1.4		1.6		1.8		2.0	
	rpm	vdc	rpm	vdc	rpm	vdc	rpm	vdc	rpm	vdc
3750	1539	6.9	1622	7.3	1701	7.7	1776	8.0	—	—
4065	1584	7.2	1664	7.5	1741	7.9	1815	8.2	—	—
4375	1632	7.4	1709	7.7	1783	8.1	—	—	—	—
4690	1683	7.6	1757	8.0	1828	8.3	—	—	—	—
5000	1737	7.9	1807	8.2	—	—	—	—	—	—
5315	1794	8.1	—	—	—	—	—	—	—	—
5625	—	—	—	—	—	—	—	—	—	—
5940	—	—	—	—	—	—	—	—	—	—
6250	—	—	—	—	—	—	—	—	—	—

Std/Med Static 1076-2200 rpm

Fan data (cont)

48GCFM14 — High Static — 12.5 Ton Vertical Supply (rpm-vdc)

CFM	AVAILABLE EXTERNAL STATIC PRESSURE (in. wg)									
	0.2		0.4		0.6		0.8		1.0	
	rpm	vdc	rpm	vdc	rpm	vdc	rpm	vdc	rpm	vdc
3750	1076	4.8	1171	5.3	1267	5.7	1361	6.1	1452	6.5
4065	1151	5.2	1238	5.6	1327	6.0	1415	6.4	1501	6.8
4375	1226	5.5	1307	5.9	1389	6.3	1471	6.6	1552	7.0
4690	1303	5.9	1378	6.2	1455	6.6	1532	6.9	1608	7.3
5000	1380	6.2	1450	6.5	1521	6.9	1593	7.2	1665	7.5
5315	1458	6.6	1524	6.9	1591	7.2	1659	7.5	1726	7.8
5625	1536	6.9	1598	7.2	1661	7.5	1725	7.8	1789	8.1
5940	1615	7.3	1674	7.6	1733	7.8	1793	8.1	1854	8.4
6250	1693	7.7	1749	7.9	1805	8.2	1862	8.4	1920	8.7

CFM	AVAILABLE EXTERNAL STATIC PRESSURE (in. wg)									
	1.2		1.4		1.6		1.8		2.0	
	rpm	vdc	rpm	vdc	rpm	vdc	rpm	vdc	rpm	vdc
3750	1539	6.9	1622	7.3	1701	7.7	1776	8.0	1847	8.4
4065	1584	7.2	1664	7.5	1741	7.9	1815	8.2	1885	8.5
4375	1632	7.4	1709	7.7	1783	8.1	1855	8.4	1924	8.7
4690	1683	7.6	1757	8.0	1828	8.3	1898	8.6	1966	8.9
5000	1737	7.9	1807	8.2	1876	8.5	1943	8.8	2009	9.1
5315	1794	8.1	1861	8.4	1927	8.7	1991	9.0	2055	9.3
5625	1853	8.4	1916	8.7	1979	9.0	2041	9.3	2103	9.6
5940	1915	8.7	1975	9.0	2035	9.2	2095	9.5	2154	9.8
6250	1977	9.0	2035	9.2	2093	9.5	2150	9.8	—	—

High Static 1076-2200 rpm

48GCFM07 — 6 Ton Horizontal Supply (rpm-bhp)

CFM	AVAILABLE EXTERNAL STATIC PRESSURE (in. wg)									
	0.2		0.4		0.6		0.8		1.0	
	rpm	bhp	rpm	bhp	rpm	bhp	rpm	bhp	rpm	bhp
1800	848	0.23	993	0.37	1119	0.53	1231	0.71	1334	0.90
1950	893	0.27	1032	0.42	1154	0.58	1263	0.76	1364	0.96
2100	940	0.31	1073	0.47	1190	0.64	1297	0.82	1395	1.03
2250	987	0.36	1114	0.52	1228	0.70	1332	0.89	1428	1.10
2400	1035	0.42	1157	0.58	1267	0.76	1368	0.96	1462	1.17
2550	1084	0.48	1201	0.65	1307	0.84	1405	1.04	1497	1.26
2700	1134	0.54	1246	0.72	1349	0.91	1444	1.12	1533	1.34
2850	1184	0.61	1292	0.80	1391	1.00	1484	1.21	1571	1.43
3000	1234	0.69	1338	0.88	1434	1.08	1525	1.30	1610	1.53

CFM	AVAILABLE EXTERNAL STATIC PRESSURE (in. wg)									
	1.2		1.4		1.6		1.8		2.0	
	rpm	bhp	rpm	bhp	rpm	bhp	rpm	bhp	rpm	bhp
1800	1428	1.10	1515	1.32	1597	1.54	1674	1.78	1747	2.02
1950	1457	1.17	1543	1.39	1625	1.62	1702	1.86	1774	2.11
2100	1487	1.24	1572	1.47	1653	1.71	1729	1.95	1802	2.21
2250	1517	1.32	1602	1.55	1682	1.79	1757	2.04	1829	2.31
2400	1550	1.40	1633	1.64	1711	1.88	1786	2.14	1858	2.41
2550	1583	1.48	1665	1.73	1742	1.98	1816	2.24	1887	2.52
2700	1618	1.58	1698	1.82	1774	2.08	1847	2.35	1917	2.62
2850	1653	1.67	1732	1.92	1807	2.18	1878	2.45	1947	2.73
3000	1690	1.77	1767	2.02	1841	2.29	1911	2.56	1979	2.84

Std/Med Static 848-2000 rpm, 2.4 Max bhp

High Static 848-2200 rpm, 3.0 Max bhp

48GCFM07 — Standard/Medium Static — 6 Ton Horizontal Supply (rpm-vdc)

CFM	AVAILABLE EXTERNAL STATIC PRESSURE (in. wg)									
	0.2		0.4		0.6		0.8		1.0	
	rpm	vdc	rpm	vdc	rpm	vdc	rpm	vdc	rpm	vdc
1800	848	4.1	993	4.8	1119	5.5	1231	6.0	1334	6.6
1950	893	4.3	1032	5.0	1154	5.6	1263	6.2	1364	6.7
2100	940	4.5	1073	5.2	1190	5.8	1297	6.4	1395	6.9
2250	987	4.8	1114	5.4	1228	6.0	1332	6.6	1428	7.1
2400	1035	5.0	1157	5.7	1267	6.2	1368	6.7	1462	7.2
2550	1084	5.3	1201	5.9	1307	6.4	1405	6.9	1497	7.4
2700	1134	5.5	1246	6.1	1349	6.7	1444	7.1	1533	7.6
2850	1184	5.8	1292	6.4	1391	6.9	1484	7.3	1571	7.8
3000	1234	6.1	1338	6.6	1434	7.1	1525	7.6	1610	8.0

CFM	AVAILABLE EXTERNAL STATIC PRESSURE (in. wg)									
	1.2		1.4		1.6		1.8		2.0	
	rpm	vdc	rpm	vdc	rpm	vdc	rpm	vdc	rpm	vdc
1800	1428	7.1	1515	7.5	1597	7.9	1674	8.3	1747	8.7
1950	1457	7.2	1543	7.6	1625	8.1	1702	8.5	1774	8.8
2100	1487	7.4	1572	7.8	1653	8.2	1729	8.6	1802	9.0
2250	1517	7.5	1602	8.0	1682	8.4	1757	8.8	1829	9.1
2400	1550	7.7	1633	8.1	1711	8.5	1786	8.9	1858	9.3
2550	1583	7.9	1665	8.3	1742	8.7	1816	9.1	1887	9.4
2700	1618	8.0	1698	8.4	1774	8.8	1847	9.2	—	—
2850	1653	8.2	1732	8.6	1807	9.0	1878	9.4	—	—
3000	1690	8.4	1767	8.8	1841	9.2	—	—	—	—

Std/Med Static 848-2000 rpm

Fan data (cont)

48GCFM07 — High Static — 6 Ton Horizontal Supply (rpm-vdc)

CFM	AVAILABLE EXTERNAL STATIC PRESSURE (in. wg)									
	0.2		0.4		0.6		0.8		1.0	
	rpm	vdc	rpm	vdc	rpm	vdc	rpm	vdc	rpm	vdc
1800	848	3.8	993	4.4	1119	5.0	1231	5.5	1334	6.0
1950	893	4.0	1032	4.6	1154	5.2	1263	5.7	1364	6.1
2100	940	4.2	1073	4.8	1190	5.3	1297	5.8	1395	6.3
2250	987	4.4	1114	5.0	1228	5.5	1332	6.0	1428	6.4
2400	1035	4.6	1157	5.2	1267	5.7	1368	6.2	1462	6.6
2550	1084	4.8	1201	5.4	1307	5.9	1405	6.3	1497	6.8
2700	1134	5.1	1246	5.6	1349	6.1	1444	6.5	1533	6.9
2850	1184	5.3	1292	5.8	1391	6.3	1484	6.7	1571	7.1
3000	1234	5.5	1338	6.0	1434	6.5	1525	6.9	1610	7.3

CFM	AVAILABLE EXTERNAL STATIC PRESSURE (in. wg)									
	1.2		1.4		1.6		1.8		2.0	
	rpm	vdc	rpm	vdc	rpm	vdc	rpm	vdc	rpm	vdc
1800	1428	6.4	1515	6.8	1597	7.2	1674	7.6	1747	7.9
1950	1457	6.6	1543	7.0	1625	7.3	1702	7.7	1774	8.0
2100	1487	6.7	1572	7.1	1653	7.5	1729	7.8	1802	8.2
2250	1517	6.8	1602	7.2	1682	7.6	1757	8.0	1829	8.3
2400	1550	7.0	1633	7.4	1711	7.7	1786	8.1	1858	8.4
2550	1583	7.2	1665	7.5	1742	7.9	1816	8.2	1887	8.6
2700	1618	7.3	1698	7.7	1774	8.0	1847	8.4	1917	8.7
2850	1653	7.5	1732	7.8	1807	8.2	1878	8.5	1947	8.8
3000	1690	7.6	1767	8.0	1841	8.3	1911	8.7	1979	9.0

High Static 848-2200 rpm

48GCFM08 — 7.5 Ton Horizontal Supply (rpm-bhp)

CFM	AVAILABLE EXTERNAL STATIC PRESSURE (in. wg)									
	0.2		0.4		0.6		0.8		1.0	
	rpm	bhp	rpm	bhp	rpm	bhp	rpm	bhp	rpm	bhp
2250	946	0.31	1072	0.46	1188	0.62	1294	0.81	1390	1.00
2440	1004	0.37	1123	0.52	1234	0.69	1336	0.88	1430	1.08
2625	1062	0.44	1174	0.59	1280	0.77	1379	0.96	1471	1.17
2815	1123	0.52	1229	0.68	1329	0.85	1424	1.05	1513	1.26
3000	1183	0.60	1283	0.76	1379	0.95	1470	1.15	1557	1.36
3190	1246	0.69	1340	0.86	1431	1.05	1519	1.25	1603	1.47
3375	1307	0.79	1397	0.96	1484	1.16	1568	1.36	1649	1.59
3565	1371	0.90	1456	1.07	1539	1.27	1620	1.48	1698	1.70
3750	1433	1.00	1514	1.19	1594	1.38	1671	1.59	1747	1.82

CFM	AVAILABLE EXTERNAL STATIC PRESSURE (in. wg)									
	1.2		1.4		1.6		1.8		2.0	
	rpm	bhp	rpm	bhp	rpm	bhp	rpm	bhp	rpm	bhp
2250	1479	1.20	1561	1.41	1639	1.64	1712	1.87	1782	2.10
2440	1518	1.29	1599	1.51	1676	1.74	1749	1.97	1818	2.22
2625	1556	1.38	1637	1.61	1713	1.84	1785	2.08	1854	2.33
2815	1597	1.48	1677	1.72	1752	1.96	1823	2.20	1891	2.46
3000	1639	1.59	1716	1.82	1790	2.07	1861	2.33	1928	2.59
3190	1682	1.70	1759	1.95	1831	2.20	1901	2.46	1967	2.72
3375	1726	1.82	1801	2.07	1872	2.32	1940	2.58	2006	2.85
3565	1773	1.94	1845	2.19	1915	2.44	1982	2.71	2047	2.99
3750	1820	2.06	1890	2.31	1958	2.56	2024	2.83	2088	3.11

Std/Med Static 946-2000 rpm, 2.4 Max bhp

High Static 946-2200 rpm, 3.0 Max bhp

48GCFM08 — Standard/Medium Static — 7.5 Ton Horizontal Supply (rpm-vdc)

CFM	AVAILABLE EXTERNAL STATIC PRESSURE (in. wg)									
	0.2		0.4		0.6		0.8		1.0	
	rpm	vdc	rpm	vdc	rpm	vdc	rpm	vdc	rpm	vdc
2250	946	4.6	1072	5.2	1188	5.8	1294	6.4	1390	6.9
2440	1004	4.9	1123	5.5	1234	6.1	1336	6.6	1430	7.1
2625	1062	5.2	1174	5.8	1280	6.3	1379	6.8	1471	7.3
2815	1123	5.5	1229	6.0	1329	6.5	1424	7.0	1513	7.5
3000	1183	5.8	1283	6.3	1379	6.8	1470	7.3	1557	7.7
3190	1246	6.1	1340	6.6	1431	7.1	1519	7.5	1603	8.0
3375	1307	6.4	1397	6.9	1484	7.3	1568	7.8	1649	8.2
3565	1371	6.8	1456	7.2	1539	7.6	1620	8.0	1698	8.4
3750	1433	7.1	1514	7.5	1594	7.9	1671	8.3	1747	8.7

CFM	AVAILABLE EXTERNAL STATIC PRESSURE (in. wg)									
	1.2		1.4		1.6		1.8		2.0	
	rpm	vdc	rpm	vdc	rpm	vdc	rpm	vdc	rpm	vdc
2250	1479	7.3	1561	7.7	1639	8.1	1712	8.5	1782	8.9
2440	1518	7.5	1599	7.9	1676	8.3	1749	8.7	1818	9.1
2625	1556	7.7	1637	8.1	1713	8.5	1785	8.9	1854	9.2
2815	1597	7.9	1677	8.3	1752	8.7	1823	9.1	1891	9.4
3000	1639	8.1	1716	8.5	1790	8.9	1861	9.3	—	—
3190	1682	8.4	1759	8.8	1831	9.1	1901	9.5	—	—
3375	1726	8.6	1801	9.0	1872	9.3	—	—	—	—
3565	1773	8.8	1845	9.2	1915	9.6	—	—	—	—
3750	1820	9.1	1890	9.4	—	—	—	—	—	—

Std/Med Static 946-2000 rpm

48GCFM08 — High Static — 7.5 Ton Horizontal Supply (rpm-vdc)

CFM	AVAILABLE EXTERNAL STATIC PRESSURE (in. wg)									
	0.2		0.4		0.6		0.8		1.0	
	rpm	vdc	rpm	vdc	rpm	vdc	rpm	vdc	rpm	vdc
2250	946	4.2	1072	4.8	1188	5.3	1294	5.8	1390	6.3
2440	1004	4.5	1123	5.0	1234	5.5	1336	6.0	1430	6.4
2625	1062	4.7	1174	5.3	1280	5.8	1379	6.2	1471	6.6
2815	1123	5.0	1229	5.5	1329	6.0	1424	6.4	1513	6.8
3000	1183	5.3	1283	5.8	1379	6.2	1470	6.6	1557	7.0
3190	1246	5.6	1340	6.0	1431	6.5	1519	6.9	1603	7.2
3375	1307	5.9	1397	6.3	1484	6.7	1568	7.1	1649	7.5
3565	1371	6.2	1456	6.6	1539	6.9	1620	7.3	1698	7.7
3750	1433	6.5	1514	6.8	1594	7.2	1671	7.6	1747	7.9

CFM	AVAILABLE EXTERNAL STATIC PRESSURE (in. wg)									
	1.2		1.4		1.6		1.8		2.0	
	rpm	vdc	rpm	vdc	rpm	vdc	rpm	vdc	rpm	vdc
2250	1479	6.7	1561	7.1	1639	7.4	1712	7.7	1782	8.1
2440	1518	6.9	1599	7.2	1676	7.6	1749	7.9	1818	8.2
2625	1556	7.0	1637	7.4	1713	7.8	1785	8.1	1854	8.4
2815	1597	7.2	1677	7.6	1752	7.9	1823	8.3	1891	8.6
3000	1639	7.4	1716	7.8	1790	8.1	1861	8.4	1928	8.7
3190	1682	7.6	1759	8.0	1831	8.3	1901	8.6	1967	8.9
3375	1726	7.8	1801	8.2	1872	8.5	1940	8.8	2006	9.1
3565	1773	8.0	1845	8.4	1915	8.7	1982	9.0	2047	9.3
3750	1820	8.2	1890	8.6	1958	8.9	2024	9.2	2088	9.5

High Static 946-2200 rpm

48GCFM09 — 8.5 Ton Horizontal Supply (rpm-bhp)

CFM	AVAILABLE EXTERNAL STATIC PRESSURE (in. wg)									
	0.2		0.4		0.6		0.8		1.0	
	rpm	bhp	rpm	bhp	rpm	bhp	rpm	bhp	rpm	bhp
2550	1043	0.42	1158	0.58	1265	0.76	1365	0.95	1458	1.16
2765	1112	0.51	1219	0.67	1321	0.85	1417	1.05	1507	1.27
2975	1180	0.60	1281	0.77	1377	0.96	1469	1.16	1556	1.38
3190	1251	0.71	1345	0.89	1437	1.08	1524	1.29	1608	1.51
3400	1321	0.83	1411	1.01	1497	1.21	1581	1.42	1661	1.65
3615	1394	0.97	1478	1.15	1560	1.35	1640	1.57	1717	1.80
3825	1465	1.11	1545	1.30	1623	1.50	1699	1.72	1774	1.96
4040	1539	1.26	1614	1.46	1689	1.67	1762	1.89	1833	2.13
4250	1611	1.42	1683	1.62	1754	1.83	1824	2.06	1892	2.30

CFM	AVAILABLE EXTERNAL STATIC PRESSURE (in. wg)									
	1.2		1.4		1.6		1.8		2.0	
	rpm	bhp	rpm	bhp	rpm	bhp	rpm	bhp	rpm	bhp
2550	1545	1.38	1626	1.60	1702	1.84	1774	2.08	1843	2.34
2765	1591	1.49	1671	1.73	1746	1.97	1818	2.22	1886	2.48
2975	1638	1.61	1716	1.86	1790	2.11	1861	2.37	1928	2.63
3190	1688	1.75	1764	2.00	1837	2.26	1906	2.52	1973	2.80
3400	1738	1.89	1813	2.15	1884	2.41	1952	2.68	2017	2.96
3615	1792	2.05	1864	2.31	1933	2.57	2000	2.85	2064	3.13
3825	1846	2.21	1915	2.47	1983	2.74	2048	3.02	—	—
4040	1902	2.38	1970	2.65	2035	2.92	—	—	—	—
4250	1959	2.56	2025	2.82	2088	3.09	—	—	—	—

Std/Med Static 1043-2000 rpm, 2.4 Max bhp

High Static 1043-2200 rpm, 5.0 Max bhp

48GCFM09 — Standard/Medium Static — 8.5 Ton Horizontal Supply (rpm-vdc)

CFM	AVAILABLE EXTERNAL STATIC PRESSURE (in. wg)									
	0.2		0.4		0.6		0.8		1.0	
	rpm	vdc	rpm	vdc	rpm	vdc	rpm	vdc	rpm	vdc
2550	1043	5.1	1158	5.7	1265	6.2	1365	6.7	1458	7.2
2765	1112	5.4	1219	6.0	1321	6.5	1417	7.0	1507	7.5
2975	1180	5.8	1281	6.3	1377	6.8	1469	7.3	1556	7.7
3190	1251	6.1	1345	6.6	1437	7.1	1524	7.6	1608	8.0
3400	1321	6.5	1411	7.0	1497	7.4	1581	7.8	1661	8.3
3615	1394	6.9	1478	7.3	1560	7.7	1640	8.1	1717	8.5
3825	1465	7.2	1545	7.7	1623	8.1	1699	8.5	1774	8.8
4040	1539	7.6	1614	8.0	1689	8.4	1762	8.8	1833	9.1
4250	1611	8.0	1683	8.4	1754	8.7	1824	9.1	1892	9.4

CFM	AVAILABLE EXTERNAL STATIC PRESSURE (in. wg)									
	1.2		1.4		1.6		1.8		2.0	
	rpm	vdc	rpm	vdc	rpm	vdc	rpm	vdc	rpm	vdc
2550	1545	7.7	1626	8.1	1702	8.5	1774	8.8	1843	9.2
2765	1591	7.9	1671	8.3	1746	8.7	1818	9.1	1886	9.4
2975	1638	8.1	1716	8.5	1790	8.9	1861	9.3	—	—
3190	1688	8.4	1764	8.8	1837	9.2	1906	9.5	—	—
3400	1738	8.7	1813	9.0	1884	9.4	—	—	—	—
3615	1792	8.9	1864	9.3	—	—	—	—	—	—
3825	1846	9.2	1915	9.6	—	—	—	—	—	—
4040	1902	9.5	—	—	—	—	—	—	—	—
4250	—	—	—	—	—	—	—	—	—	—

Std/Med Static 1043-2000 rpm

Fan data (cont)

48GCFM09 — High Static — 8.5 Ton Horizontal Supply (rpm-vdc)

CFM	AVAILABLE EXTERNAL STATIC PRESSURE (in. wg)									
	0.2		0.4		0.6		0.8		1.0	
	rpm	vdc	rpm	vdc	rpm	vdc	rpm	vdc	rpm	vdc
2550	1043	4.7	1158	5.2	1265	5.7	1365	6.1	1458	6.6
2765	1112	5.0	1219	5.5	1321	5.9	1417	6.4	1507	6.8
2975	1180	5.3	1281	5.8	1377	6.2	1469	6.6	1556	7.0
3190	1251	5.6	1345	6.1	1437	6.5	1524	6.9	1608	7.3
3400	1321	5.9	1411	6.4	1497	6.8	1581	7.1	1661	7.5
3615	1394	6.3	1478	6.7	1560	7.0	1640	7.4	1717	7.8
3825	1465	6.6	1545	7.0	1623	7.3	1699	7.7	1774	8.0
4040	1539	6.9	1614	7.3	1689	7.6	1762	8.0	1833	8.3
4250	1611	7.3	1683	7.6	1754	7.9	1824	8.3	1892	8.6

CFM	AVAILABLE EXTERNAL STATIC PRESSURE (in. wg)									
	1.2		1.4		1.6		1.8		2.0	
	rpm	vdc	rpm	vdc	rpm	vdc	rpm	vdc	rpm	vdc
2550	1545	7.0	1626	7.4	1702	7.7	1774	8.0	1843	8.4
2765	1591	7.2	1671	7.6	1746	7.9	1818	8.2	1886	8.6
2975	1638	7.4	1716	7.8	1790	8.1	1861	8.4	1928	8.7
3190	1688	7.6	1764	8.0	1837	8.3	1906	8.6	1973	9.0
3400	1738	7.9	1813	8.2	1884	8.5	1952	8.9	2017	9.2
3615	1792	8.1	1864	8.4	1933	8.8	2000	9.1	2064	9.4
3825	1846	8.4	1915	8.7	1983	9.0	2048	9.3	—	—
4040	1902	8.6	1970	8.9	2035	9.2	—	—	—	—
4250	1959	8.9	2025	9.2	2088	9.5	—	—	—	—

High Static 1043-2200 rpm

48GCFM12 — 10 Ton Horizontal Supply (rpm-bhp)

CFM	AVAILABLE EXTERNAL STATIC PRESSURE (in. wg)									
	0.2		0.4		0.6		0.8		1.0	
	rpm	bhp	rpm	bhp	rpm	bhp	rpm	bhp	rpm	bhp
3000	1188	0.62	1288	0.78	1384	0.97	1475	1.18	1562	1.40
3250	1271	0.75	1364	0.92	1454	1.12	1540	1.33	1623	1.55
3500	1355	0.89	1441	1.07	1526	1.27	1608	1.49	1687	1.72
3750	1439	1.05	1521	1.24	1600	1.45	1678	1.67	1753	1.90
4000	1525	1.23	1601	1.42	1676	1.63	1750	1.86	1822	2.10
4250	1611	1.42	1683	1.62	1754	1.83	1824	2.06	1892	2.30
4500	1697	1.62	1765	1.82	1833	2.04	1899	2.27	1965	2.51
4750	1784	1.83	1849	2.03	1913	2.25	1976	2.48	2038	2.72
5000	1872	2.04	1933	2.25	1994	2.47	2054	2.70	2114	2.94

CFM	AVAILABLE EXTERNAL STATIC PRESSURE (in. wg)									
	1.2		1.4		1.6		1.8		2.0	
	rpm	bhp	rpm	bhp	rpm	bhp	rpm	bhp	rpm	bhp
3000	1644	1.63	1722	1.87	1796	2.13	1866	2.38	1933	2.65
3250	1702	1.79	1778	2.04	1850	2.30	1919	2.57	1985	2.84
3500	1763	1.96	1836	2.22	1906	2.48	1974	2.76	2039	3.04
3750	1826	2.15	1897	2.41	1965	2.68	2031	2.96	2094	3.24
4000	1892	2.35	1960	2.61	2026	2.89	2090	3.17	2152	3.46
4250	1959	2.56	2025	2.82	2088	3.09	2150	3.38	—	—
4500	2029	2.77	2092	3.03	2153	3.31	—	—	—	—
4750	2100	2.98	2160	3.24	—	—	—	—	—	—
5000	2173	3.19	—	—	—	—	—	—	—	—

Std/Med Static 1188-2200 rpm, 3.0 Max bhp

High Static 1188-2200 rpm, 5.0 Max bhp

48GCFM12 — Standard/Medium Static — 10 Ton Horizontal Supply (rpm-vdc)

CFM	AVAILABLE EXTERNAL STATIC PRESSURE (in. wg)									
	0.2		0.4		0.6		0.8		1.0	
	rpm	vdc	rpm	vdc	rpm	vdc	rpm	vdc	rpm	vdc
3000	1188	5.8	1288	6.3	1384	6.8	1475	7.3	1562	7.7
3250	1271	6.3	1364	6.7	1454	7.2	1540	7.6	1623	8.1
3500	1355	6.7	1441	7.1	1526	7.6	1608	8.0	1687	8.4
3750	1439	7.1	1521	7.5	1600	7.9	1678	8.3	1753	8.7
4000	1525	7.6	1601	7.9	1676	8.3	1750	8.7	1822	9.1
4250	1611	8.0	1683	8.4	1754	8.7	1824	9.1	1892	9.4
4500	1697	8.4	1765	8.8	1833	9.1	1899	9.5	1965	9.8
4750	1784	8.9	1849	9.2	1913	9.6	1976	9.9	—	—
5000	1872	9.3	1933	9.7	1994	10.0	—	—	—	—

CFM	AVAILABLE EXTERNAL STATIC PRESSURE (in. wg)									
	1.2		1.4		1.6		1.8		2.0	
	rpm	vdc	rpm	vdc	rpm	vdc	rpm	vdc	rpm	vdc
3000	1644	8.2	1722	8.6	1796	9.0	1866	9.3	—	—
3250	1702	8.5	1778	8.9	1850	9.2	—	—	—	—
3500	1763	8.8	1836	9.2	1906	9.5	—	—	—	—
3750	1826	9.1	1897	9.5	—	—	—	—	—	—
4000	1892	9.4	—	—	—	—	—	—	—	—
4250	—	—	—	—	—	—	—	—	—	—
4500	—	—	—	—	—	—	—	—	—	—
4750	—	—	—	—	—	—	—	—	—	—
5000	—	—	—	—	—	—	—	—	—	—

Std/Med Static 1188-2200 rpm

48GCFM12 — High Static — 10 Ton Horizontal Supply (rpm-vdc)

CFM	AVAILABLE EXTERNAL STATIC PRESSURE (in. wg)									
	0.2		0.4		0.6		0.8		1.0	
	rpm	vdc	rpm	vdc	rpm	vdc	rpm	vdc	rpm	vdc
3000	1188	5.3	1288	5.8	1384	6.2	1475	6.7	1562	7.1
3250	1271	5.7	1364	6.1	1454	6.6	1540	7.0	1623	7.3
3500	1355	6.1	1441	6.5	1526	6.9	1608	7.3	1687	7.6
3750	1439	6.5	1521	6.9	1600	7.2	1678	7.6	1753	7.9
4000	1525	6.9	1601	7.2	1676	7.6	1750	7.9	1822	8.3
4250	1611	7.3	1683	7.6	1754	7.9	1824	8.3	1892	8.6
4500	1697	7.7	1765	8.0	1833	8.3	1899	8.6	1965	8.9
4750	1784	8.1	1849	8.4	1913	8.7	1976	9.0	2038	9.3
5000	1872	8.5	1933	8.8	1994	9.0	2054	9.3	2114	9.6

CFM	AVAILABLE EXTERNAL STATIC PRESSURE (in. wg)									
	1.2		1.4		1.6		1.8		2.0	
	rpm	vdc	rpm	vdc	rpm	vdc	rpm	vdc	rpm	vdc
3000	1644	7.4	1722	7.8	1796	8.1	1866	8.5	1933	8.8
3250	1702	7.7	1778	8.1	1850	8.4	1919	8.7	1985	9.0
3500	1763	8.0	1836	8.3	1906	8.6	1974	9.0	2039	9.3
3750	1826	8.3	1897	8.6	1965	8.9	2031	9.2	2094	9.5
4000	1892	8.6	1960	8.9	2026	9.2	2090	9.5	2152	9.8
4250	1959	8.9	2025	9.2	2088	9.5	2150	9.8	—	—
4500	2029	9.2	2092	9.5	2153	9.8	—	—	—	—
4750	2100	9.5	2160	9.8	—	—	—	—	—	—
5000	2173	9.9	—	—	—	—	—	—	—	—

High Static 1188-2200 rpm

48GCFM14 — 12.5 Ton Horizontal Supply (rpm-bhp)

CFM	AVAILABLE EXTERNAL STATIC PRESSURE (in. wg)									
	0.2		0.4		0.6		0.8		1.0	
	rpm	bhp	rpm	bhp	rpm	bhp	rpm	bhp	rpm	bhp
3750	1079	0.66	1174	0.85	1270	1.08	1364	1.33	1454	1.61
4065	1154	0.81	1242	1.00	1330	1.23	1418	1.49	1504	1.78
4375	1229	0.97	1310	1.18	1393	1.41	1475	1.68	1556	1.97
4690	1306	1.16	1382	1.38	1459	1.62	1535	1.88	1612	2.18
5000	1383	1.37	1454	1.59	1525	1.84	1598	2.11	1670	2.41
5315	1462	1.61	1528	1.83	1595	2.09	1663	2.36	1731	2.67
5625	1540	1.86	1602	2.09	1665	2.35	1729	2.63	1793	2.93
5940	1619	2.13	1678	2.37	1738	2.63	1798	2.91	1859	3.22
6250	1698	2.42	1754	2.66	1810	2.93	1867	3.21	1925	3.52

CFM	AVAILABLE EXTERNAL STATIC PRESSURE (in. wg)									
	1.2		1.4		1.6		1.8		2.0	
	rpm	bhp	rpm	bhp	rpm	bhp	rpm	bhp	rpm	bhp
3750	1540	1.92	1623	2.25	1701	2.59	1775	2.94	1846	3.30
4065	1586	2.09	1666	2.42	1742	2.77	1815	3.13	1885	3.51
4375	1635	2.29	1711	2.62	1785	2.97	1856	3.34	1925	3.73
4690	1687	2.50	1760	2.84	1831	3.20	1900	3.57	1967	3.97
5000	1741	2.73	1811	3.08	1879	3.44	1946	3.82	2011	4.21
5315	1798	2.99	1865	3.33	1930	3.69	1995	4.08	2058	4.48
5625	1857	3.25	1921	3.60	1984	3.97	2045	4.35	2106	4.75
5940	1920	3.55	1980	3.89	2040	4.25	2099	4.63	2158	5.04
6250	1983	3.85	2040	4.19	2098	4.56	2154	4.93	—	—

Std/Med Static 1079-2200 rpm, 3.0 Max bhp

High Static 1079-2200 rpm, 5.0 Max bhp

48GCFM14 — Standard/Medium Static — 12.5 Ton Horizontal Supply (rpm-vdc)

CFM	AVAILABLE EXTERNAL STATIC PRESSURE (in. wg)									
	0.2		0.4		0.6		0.8		1.0	
	rpm	vdc	rpm	vdc	rpm	vdc	rpm	vdc	rpm	vdc
3750	1079	4.8	1174	5.3	1270	5.7	1364	6.1	1454	6.6
4065	1154	5.2	1242	5.6	1330	6.0	1418	6.4	1504	6.8
4375	1229	5.5	1310	5.9	1393	6.3	1475	6.7	1556	7.0
4690	1306	5.9	1382	6.2	1459	6.6	1535	6.9	1612	7.3
5000	1383	6.2	1454	6.6	1525	6.9	1598	7.2	1670	7.6
5315	1462	6.6	1528	6.9	1595	7.2	1663	7.5	1731	7.8
5625	1540	7.0	1602	7.2	1665	7.5	1729	7.8	1793	8.1
5940	1619	7.3	1678	7.6	1738	7.9	1798	8.1	—	—
6250	1698	7.7	1754	7.9	1810	8.2	—	—	—	—

CFM	AVAILABLE EXTERNAL STATIC PRESSURE (in. wg)									
	1.2		1.4		1.6		1.8		2.0	
	rpm	vdc	rpm	vdc	rpm	vdc	rpm	vdc	rpm	vdc
3750	1540	7.0	1623	7.3	1701	7.7	1775	8.0	—	—
4065	1586	7.2	1666	7.5	1742	7.9	1815	8.2	—	—
4375	1635	7.4	1711	7.7	1785	8.1	—	—	—	—
4690	1687	7.6	1760	8.0	1831	8.3	—	—	—	—
5000	1741	7.9	1811	8.2	—	—	—	—	—	—
5315	1798	8.1	—	—	—	—	—	—	—	—
5625	—	—	—	—	—	—	—	—	—	—
5940	—	—	—	—	—	—	—	—	—	—
6250	—	—	—	—	—	—	—	—	—	—

Std/Med Static 1079-2200 rpm

Fan data (cont)

48GCFM14 — High Static — 12.5 Ton Horizontal Supply (rpm-vdc)

CFM	AVAILABLE EXTERNAL STATIC PRESSURE (in. wg)									
	0.2		0.4		0.6		0.8		1.0	
	rpm	vdc	rpm	vdc	rpm	vdc	rpm	vdc	rpm	vdc
3750	1079	4.8	1174	5.3	1270	5.7	1364	6.1	1454	6.6
4065	1154	5.2	1242	5.6	1330	6.0	1418	6.4	1504	6.8
4375	1229	5.5	1310	5.9	1393	6.3	1475	6.7	1556	7.0
4690	1306	5.9	1382	6.2	1459	6.6	1535	6.9	1612	7.3
5000	1383	6.2	1454	6.6	1525	6.9	1598	7.2	1670	7.6
5315	1462	6.6	1528	6.9	1595	7.2	1663	7.5	1731	7.8
5625	1540	7.0	1602	7.2	1665	7.5	1729	7.8	1793	8.1
5940	1619	7.3	1678	7.6	1738	7.9	1798	8.1	1859	8.4
6250	1698	7.7	1754	7.9	1810	8.2	1867	8.5	1925	8.7

CFM	AVAILABLE EXTERNAL STATIC PRESSURE (in. wg)									
	1.2		1.4		1.6		1.8		2.0	
	rpm	vdc	rpm	vdc	rpm	vdc	rpm	vdc	rpm	vdc
3750	1540	7.0	1623	7.3	1701	7.7	1775	8.0	1846	8.4
4065	1586	7.2	1666	7.5	1742	7.9	1815	8.2	1885	8.5
4375	1635	7.4	1711	7.7	1785	8.1	1856	8.4	1925	8.7
4690	1687	7.6	1760	8.0	1831	8.3	1900	8.6	1967	8.9
5000	1741	7.9	1811	8.2	1879	8.5	1946	8.8	2011	9.1
5315	1798	8.1	1865	8.5	1930	8.8	1995	9.1	2058	9.3
5625	1857	8.4	1921	8.7	1984	9.0	2045	9.3	2106	9.6
5940	1920	8.7	1980	9.0	2040	9.3	2099	9.5	2158	9.8
6250	1983	9.0	2040	9.3	2098	9.5	2154	9.8	—	—

High Static 1079-2200 rpm

50GC-M07 — 6 Ton Vertical Supply (rpm-bhp)

CFM	AVAILABLE EXTERNAL STATIC PRESSURE (in. wg)									
	0.2		0.4		0.6		0.8		1.0	
	rpm	bhp	rpm	bhp	rpm	bhp	rpm	bhp	rpm	bhp
1800	799	0.19	952	0.33	1081	0.48	1194	0.64	1297	0.83
1950	845	0.23	993	0.37	1118	0.53	1228	0.70	1329	0.89
2100	893	0.27	1035	0.42	1156	0.58	1264	0.76	1362	0.95
2250	942	0.32	1079	0.47	1196	0.64	1301	0.83	1397	1.03
2400	992	0.37	1124	0.53	1237	0.71	1340	0.90	1433	1.11
2550	1044	0.43	1170	0.60	1280	0.79	1380	0.98	1471	1.19
2700	1096	0.49	1217	0.67	1324	0.86	1421	1.07	1511	1.28
2850	1148	0.56	1266	0.75	1369	0.95	1463	1.16	1551	1.38
3000	1202	0.64	1315	0.83	1415	1.04	1507	1.26	1593	1.48

CFM	AVAILABLE EXTERNAL STATIC PRESSURE (in. wg)									
	1.2		1.4		1.6		1.8		2.0	
	rpm	bhp	rpm	bhp	rpm	bhp	rpm	bhp	rpm	bhp
1800	1392	1.02	1480	1.23	1562	1.44	1640	1.67	1714	1.91
1950	1422	1.09	1509	1.30	1590	1.52	1667	1.75	1740	1.99
2100	1453	1.16	1539	1.38	1619	1.60	1696	1.84	1768	2.09
2250	1486	1.24	1570	1.46	1650	1.69	1725	1.93	1797	2.19
2400	1521	1.32	1603	1.55	1681	1.79	1756	2.03	1827	2.29
2550	1557	1.41	1638	1.65	1715	1.89	1788	2.14	1858	2.40
2700	1594	1.51	1674	1.75	1749	1.99	1821	2.25	1890	2.51
2850	1633	1.61	1711	1.85	1785	2.10	1856	2.37	1924	2.63
3000	1673	1.72	1749	1.96	1822	2.22	1891	2.48	1958	2.75

Std/Med Static 799-2000 rpm, 2.4 Max bhp

High Static 799-2200 rpm, 3.0 Max bhp

50GC-M07 — Standard/Medium Static — 6 Ton Vertical Supply (rpm-vdc)

CFM	AVAILABLE EXTERNAL STATIC PRESSURE (in. wg)									
	0.2		0.4		0.6		0.8		1.0	
	rpm	vdc	rpm	vdc	rpm	vdc	rpm	vdc	rpm	vdc
1800	799	3.8	952	4.6	1081	5.3	1194	5.9	1297	6.4
1950	845	4.1	993	4.8	1118	5.5	1228	6.0	1329	6.5
2100	893	4.3	1035	5.0	1156	5.7	1264	6.2	1362	6.7
2250	942	4.6	1079	5.3	1196	5.9	1301	6.4	1397	6.9
2400	992	4.8	1124	5.5	1237	6.1	1340	6.6	1433	7.1
2550	1044	5.1	1170	5.7	1280	6.3	1380	6.8	1471	7.3
2700	1096	5.4	1217	6.0	1324	6.5	1421	7.0	1511	7.5
2850	1148	5.6	1266	6.2	1369	6.8	1463	7.2	1551	7.7
3000	1202	5.9	1315	6.5	1415	7.0	1507	7.5	1593	7.9

CFM	AVAILABLE EXTERNAL STATIC PRESSURE (in. wg)									
	1.2		1.4		1.6		1.8		2.0	
	rpm	vdc	rpm	vdc	rpm	vdc	rpm	vdc	rpm	vdc
1800	1392	6.9	1480	7.3	1562	7.7	1640	8.1	1714	8.5
1950	1422	7.0	1509	7.5	1590	7.9	1667	8.3	1740	8.7
2100	1453	7.2	1539	7.6	1619	8.0	1696	8.4	1768	8.8
2250	1486	7.4	1570	7.8	1650	8.2	1725	8.6	1797	9.0
2400	1521	7.5	1603	8.0	1681	8.4	1756	8.7	1827	9.1
2550	1557	7.7	1638	8.1	1715	8.5	1788	8.9	1858	9.3
2700	1594	7.9	1674	8.3	1749	8.7	1821	9.1	1890	9.4
2850	1633	8.1	1711	8.5	1785	8.9	1856	9.3	—	—
3000	1673	8.3	1749	8.7	1822	9.1	1891	9.4	—	—

Std/Med Static 799-2000 rpm

Fan data (cont)

50GC-M07 — High Static — 6 Ton Vertical Supply (rpm-vdc)

CFM	AVAILABLE EXTERNAL STATIC PRESSURE (in. wg)									
	0.2		0.4		0.6		0.8		1.0	
	rpm	vdc	rpm	vdc	rpm	vdc	rpm	vdc	rpm	vdc
1800	799	3.5	952	4.2	1081	4.8	1194	5.4	1297	5.8
1950	845	3.7	993	4.4	1118	5.0	1228	5.5	1329	6.0
2100	893	4.0	1035	4.6	1156	5.2	1264	5.7	1362	6.1
2250	942	4.2	1079	4.8	1196	5.4	1301	5.9	1397	6.3
2400	992	4.4	1124	5.0	1237	5.6	1340	6.0	1433	6.5
2550	1044	4.7	1170	5.2	1280	5.8	1380	6.2	1471	6.6
2700	1096	4.9	1217	5.5	1324	6.0	1421	6.4	1511	6.8
2850	1148	5.1	1266	5.7	1369	6.2	1463	6.6	1551	7.0
3000	1202	5.4	1315	5.9	1415	6.4	1507	6.8	1593	7.2

CFM	AVAILABLE EXTERNAL STATIC PRESSURE (in. wg)									
	1.2		1.4		1.6		1.8		2.0	
	rpm	vdc	rpm	vdc	rpm	vdc	rpm	vdc	rpm	vdc
1800	1392	6.3	1480	6.7	1562	7.1	1640	7.4	1714	7.8
1950	1422	6.4	1509	6.8	1590	7.2	1667	7.5	1740	7.9
2100	1453	6.6	1539	6.9	1619	7.3	1696	7.7	1768	8.0
2250	1486	6.7	1570	7.1	1650	7.5	1725	7.8	1797	8.1
2400	1521	6.9	1603	7.2	1681	7.6	1756	8.0	1827	8.3
2550	1557	7.0	1638	7.4	1715	7.8	1788	8.1	1858	8.4
2700	1594	7.2	1674	7.6	1749	7.9	1821	8.3	1890	8.6
2850	1633	7.4	1711	7.7	1785	8.1	1856	8.4	1924	8.7
3000	1673	7.6	1749	7.9	1822	8.3	1891	8.6	1958	8.9

High Static 799-2200 rpm

50GC-M08 — 7.5 Ton Vertical Supply (rpm-bhp)

CFM	AVAILABLE EXTERNAL STATIC PRESSURE (in. wg)									
	0.2		0.4		0.6		0.8		1.0	
	rpm	bhp	rpm	bhp	rpm	bhp	rpm	bhp	rpm	bhp
2250	932	0.30	1056	0.44	1168	0.59	1271	0.77	1365	0.95
2440	992	0.36	1109	0.51	1216	0.67	1315	0.84	1407	1.03
2625	1053	0.43	1162	0.58	1265	0.74	1360	0.92	1449	1.12
2815	1116	0.51	1219	0.66	1317	0.83	1408	1.02	1495	1.22
3000	1178	0.59	1276	0.75	1369	0.93	1457	1.12	1541	1.32
3190	1242	0.68	1335	0.85	1424	1.03	1509	1.23	1590	1.43
3375	1306	0.78	1394	0.95	1479	1.14	1561	1.34	1639	1.55
3565	1372	0.90	1456	1.07	1537	1.26	1615	1.46	1691	1.68
3750	1436	1.01	1517	1.19	1594	1.38	1670	1.59	1742	1.80

CFM	AVAILABLE EXTERNAL STATIC PRESSURE (in. wg)									
	1.2		1.4		1.6		1.8		2.0	
	rpm	bhp	rpm	bhp	rpm	bhp	rpm	bhp	rpm	bhp
2250	1453	1.15	1535	1.35	1612	1.56	1685	1.79	1755	2.02
2440	1493	1.23	1573	1.44	1649	1.66	1722	1.89	1790	2.12
2625	1533	1.32	1612	1.54	1687	1.76	1758	2.00	1826	2.24
2815	1576	1.43	1654	1.65	1727	1.88	1797	2.11	1864	2.36
3000	1620	1.53	1696	1.76	1768	1.99	1836	2.23	1903	2.49
3190	1667	1.65	1740	1.88	1811	2.12	1878	2.36	1943	2.62
3375	1713	1.77	1785	2.00	1854	2.25	1920	2.49	1984	2.75
3565	1763	1.90	1833	2.14	1900	2.38	1965	2.63	2027	2.89
3750	1812	2.03	1880	2.26	1946	2.51	2009	2.76	2071	3.03

Std/Med Static 932-2000 rpm, 2.4 Max bhp

High Static 932-2200 rpm, 3.0 Max bhp

50GC-M08 — Standard/Medium Static — 7.5 Ton Vertical Supply (rpm-vdc)

CFM	AVAILABLE EXTERNAL STATIC PRESSURE (in. wg)									
	0.2		0.4		0.6		0.8		1.0	
	rpm	vdc	rpm	vdc	rpm	vdc	rpm	vdc	rpm	vdc
2250	932	4.5	1056	5.1	1168	5.7	1271	6.3	1365	6.7
2440	992	4.8	1109	5.4	1216	6.0	1315	6.5	1407	7.0
2625	1053	5.1	1162	5.7	1265	6.2	1360	6.7	1449	7.2
2815	1116	5.5	1219	6.0	1317	6.5	1408	7.0	1495	7.4
3000	1178	5.8	1276	6.3	1369	6.8	1457	7.2	1541	7.6
3190	1242	6.1	1335	6.6	1424	7.0	1509	7.5	1590	7.9
3375	1306	6.4	1394	6.9	1479	7.3	1561	7.7	1639	8.1
3565	1372	6.8	1456	7.2	1537	7.6	1615	8.0	1691	8.4
3750	1436	7.1	1517	7.5	1594	7.9	1670	8.3	1742	8.7

CFM	AVAILABLE EXTERNAL STATIC PRESSURE (in. wg)									
	1.2		1.4		1.6		1.8		2.0	
	rpm	vdc	rpm	vdc	rpm	vdc	rpm	vdc	rpm	vdc
2250	1453	7.2	1535	7.6	1612	8.0	1685	8.4	1755	8.7
2440	1493	7.4	1573	7.8	1649	8.2	1722	8.6	1790	8.9
2625	1533	7.6	1612	8.0	1687	8.4	1758	8.8	1826	9.1
2815	1576	7.8	1654	8.2	1727	8.6	1797	9.0	1864	9.3
3000	1620	8.0	1696	8.4	1768	8.8	1836	9.2	1903	9.5
3190	1667	8.3	1740	8.7	1811	9.0	1878	9.4	—	—
3375	1713	8.5	1785	8.9	1854	9.2	1920	9.6	—	—
3565	1763	8.8	1833	9.1	1900	9.5	—	—	—	—
3750	1812	9.0	1880	9.4	1946	9.7	—	—	—	—

Std/Med Static 932-2000 rpm

50GC-M08 — High Static — 7.5 Ton Vertical Supply (rpm-vdc)

CFM	AVAILABLE EXTERNAL STATIC PRESSURE (in. wg)									
	0.2		0.4		0.6		0.8		1.0	
	rpm	vdc	rpm	vdc	rpm	vdc	rpm	vdc	rpm	vdc
2250	932	4.1	1056	4.7	1168	5.2	1271	5.7	1365	6.1
2440	992	4.4	1109	5.0	1216	5.5	1315	5.9	1407	6.3
2625	1053	4.7	1162	5.2	1265	5.7	1360	6.1	1449	6.5
2815	1116	5.0	1219	5.5	1317	5.9	1408	6.3	1495	6.7
3000	1178	5.3	1276	5.7	1369	6.2	1457	6.6	1541	7.0
3190	1242	5.6	1335	6.0	1424	6.4	1509	6.8	1590	7.2
3375	1306	5.9	1394	6.3	1479	6.7	1561	7.1	1639	7.4
3565	1372	6.2	1456	6.6	1537	6.9	1615	7.3	1691	7.7
3750	1436	6.5	1517	6.8	1594	7.2	1670	7.6	1742	7.9

CFM	AVAILABLE EXTERNAL STATIC PRESSURE (in. wg)									
	1.2		1.4		1.6		1.8		2.0	
	rpm	vdc	rpm	vdc	rpm	vdc	rpm	vdc	rpm	vdc
2250	1453	6.6	1535	6.9	1612	7.3	1685	7.6	1755	7.9
2440	1493	6.7	1573	7.1	1649	7.5	1722	7.8	1790	8.1
2625	1533	6.9	1612	7.3	1687	7.6	1758	8.0	1826	8.3
2815	1576	7.1	1654	7.5	1727	7.8	1797	8.1	1864	8.4
3000	1620	7.3	1696	7.7	1768	8.0	1836	8.3	1903	8.6
3190	1667	7.5	1740	7.9	1811	8.2	1878	8.5	1943	8.8
3375	1713	7.8	1785	8.1	1854	8.4	1920	8.7	1984	9.0
3565	1763	8.0	1833	8.3	1900	8.6	1965	8.9	2027	9.2
3750	1812	8.2	1880	8.5	1946	8.8	2009	9.1	2071	9.4

High Static 932-2200 rpm

50GC-M09 — 8.5 Ton Vertical Supply (rpm-bhp)

CFM	AVAILABLE EXTERNAL STATIC PRESSURE (in. wg)									
	0.2		0.4		0.6		0.8		1.0	
	rpm	bhp	rpm	bhp	rpm	bhp	rpm	bhp	rpm	bhp
2550	1033	0.41	1145	0.56	1249	0.73	1346	0.91	1436	1.10
2765	1104	0.50	1209	0.65	1308	0.83	1401	1.02	1488	1.22
2975	1175	0.60	1273	0.76	1367	0.94	1456	1.13	1540	1.34
3190	1248	0.71	1341	0.88	1430	1.06	1515	1.27	1595	1.48
3400	1321	0.83	1409	1.01	1493	1.20	1574	1.41	1652	1.62
3615	1396	0.97	1479	1.15	1559	1.35	1636	1.56	1711	1.78
3825	1469	1.11	1548	1.30	1625	1.51	1699	1.72	1771	1.95
4040	1545	1.28	1620	1.47	1693	1.68	1764	1.90	1833	2.13
4250	1620	1.44	1692	1.65	1761	1.86	1829	2.08	1896	2.32

CFM	AVAILABLE EXTERNAL STATIC PRESSURE (in. wg)									
	1.2		1.4		1.6		1.8		2.0	
	rpm	bhp	rpm	bhp	rpm	bhp	rpm	bhp	rpm	bhp
2550	1521	1.31	1600	1.53	1676	1.76	1747	1.99	1816	2.23
2765	1570	1.43	1647	1.65	1721	1.89	1791	2.13	1859	2.38
2975	1619	1.56	1695	1.79	1767	2.03	1836	2.27	1902	2.53
3190	1672	1.70	1746	1.94	1816	2.18	1884	2.43	1948	2.69
3400	1726	1.85	1797	2.09	1866	2.34	1932	2.60	1995	2.86
3615	1783	2.02	1852	2.26	1918	2.51	1983	2.78	2045	3.05
3825	1840	2.19	1907	2.44	1972	2.70	2034	2.96	—	—
4040	1900	2.37	1965	2.63	2028	2.89	2089	3.16	—	—
4250	1960	2.56	2023	2.81	2084	3.08	—	—	—	—

Std/Med Static 1033-2000 rpm, 2.4 Max bhp

High Static 1033-2200 rpm, 5.0 Max bhp

50GC-M09 — Standard/Medium Static — 8.5 Ton Vertical Supply (rpm-vdc)

CFM	AVAILABLE EXTERNAL STATIC PRESSURE (in. wg)									
	0.2		0.4		0.6		0.8		1.0	
	rpm	vdc	rpm	vdc	rpm	vdc	rpm	vdc	rpm	vdc
2550	1033	5.0	1145	5.6	1249	6.1	1346	6.6	1436	7.1
2765	1104	5.4	1209	5.9	1308	6.4	1401	6.9	1488	7.4
2975	1175	5.8	1273	6.3	1367	6.7	1456	7.2	1540	7.6
3190	1248	6.1	1341	6.6	1430	7.1	1515	7.5	1595	7.9
3400	1321	6.5	1409	7.0	1493	7.4	1574	7.8	1652	8.2
3615	1396	6.9	1479	7.3	1559	7.7	1636	8.1	1711	8.5
3825	1469	7.3	1548	7.7	1625	8.1	1699	8.5	1771	8.8
4040	1545	7.7	1620	8.0	1693	8.4	1764	8.8	1833	9.1
4250	1620	8.0	1692	8.4	1761	8.8	1829	9.1	1896	9.5

CFM	AVAILABLE EXTERNAL STATIC PRESSURE (in. wg)									
	1.2		1.4		1.6		1.8		2.0	
	rpm	vdc	rpm	vdc	rpm	vdc	rpm	vdc	rpm	vdc
2550	1521	7.5	1600	7.9	1676	8.3	1747	8.7	1816	9.1
2765	1570	7.8	1647	8.2	1721	8.6	1791	8.9	1859	9.3
2975	1619	8.0	1695	8.4	1767	8.8	1836	9.2	1902	9.5
3190	1672	8.3	1746	8.7	1816	9.1	1884	9.4	—	—
3400	1726	8.6	1797	9.0	1866	9.3	—	—	—	—
3615	1783	8.9	1852	9.2	1918	9.6	—	—	—	—
3825	1840	9.2	1907	9.5	—	—	—	—	—	—
4040	1900	9.5	—	—	—	—	—	—	—	—
4250	—	—	—	—	—	—	—	—	—	—

Std/Med Static 1033-2000 rpm

Fan data (cont)

50GC-M09 — High Static — 8.5 Ton Vertical Supply (rpm-vdc)

CFM	AVAILABLE EXTERNAL STATIC PRESSURE (in. wg)									
	0.2		0.4		0.6		0.8		1.0	
	rpm	vdc	rpm	vdc	rpm	vdc	rpm	vdc	rpm	vdc
2550	1033	4.6	1145	5.1	1249	5.6	1346	6.1	1436	6.5
2765	1104	4.9	1209	5.4	1308	5.9	1401	6.3	1488	6.7
2975	1175	5.3	1273	5.7	1367	6.2	1456	6.6	1540	7.0
3190	1248	5.6	1341	6.0	1430	6.4	1515	6.8	1595	7.2
3400	1321	5.9	1409	6.3	1493	6.7	1574	7.1	1652	7.5
3615	1396	6.3	1479	6.7	1559	7.0	1636	7.4	1711	7.7
3825	1469	6.6	1548	7.0	1625	7.3	1699	7.7	1771	8.0
4040	1545	7.0	1620	7.3	1693	7.7	1764	8.0	1833	8.3
4250	1620	7.3	1692	7.7	1761	8.0	1829	8.3	1896	8.6

CFM	AVAILABLE EXTERNAL STATIC PRESSURE (in. wg)									
	1.2		1.4		1.6		1.8		2.0	
	rpm	vdc	rpm	vdc	rpm	vdc	rpm	vdc	rpm	vdc
2550	1521	6.9	1600	7.2	1676	7.6	1747	7.9	1816	8.2
2765	1570	7.1	1647	7.4	1721	7.8	1791	8.1	1859	8.4
2975	1619	7.3	1695	7.7	1767	8.0	1836	8.3	1902	8.6
3190	1672	7.6	1746	7.9	1816	8.2	1884	8.5	1948	8.8
3400	1726	7.8	1797	8.1	1866	8.5	1932	8.8	1995	9.1
3615	1783	8.1	1852	8.4	1918	8.7	1983	9.0	2045	9.3
3825	1840	8.3	1907	8.6	1972	8.9	2034	9.2	—	—
4040	1900	8.6	1965	8.9	2028	9.2	2089	9.5	—	—
4250	1960	8.9	2023	9.2	2084	9.5	—	—	—	—

High Static 1033-2200 rpm

50GC-M12 — 10 Ton Vertical Supply (rpm-bhp)

CFM	AVAILABLE EXTERNAL STATIC PRESSURE (in. wg)									
	0.2		0.4		0.6		0.8		1.0	
	rpm	bhp	rpm	bhp	rpm	bhp	rpm	bhp	rpm	bhp
3000	1181	0.60	1279	0.77	1372	0.95	1461	1.14	1544	1.35
3250	1264	0.73	1356	0.91	1443	1.09	1527	1.29	1607	1.51
3500	1348	0.88	1434	1.06	1517	1.25	1596	1.46	1673	1.68
3750	1433	1.04	1514	1.23	1592	1.43	1667	1.64	1740	1.86
4000	1518	1.21	1595	1.41	1669	1.61	1740	1.83	1810	2.06
4250	1605	1.41	1677	1.60	1747	1.81	1815	2.03	1882	2.27
4500	1691	1.60	1760	1.81	1826	2.02	1892	2.24	1955	2.48
4750	1778	1.81	1843	2.01	1907	2.23	1969	2.46	2030	2.69
5000	1866	2.02	1928	2.23	1988	2.44	2048	2.67	2106	2.91

CFM	AVAILABLE EXTERNAL STATIC PRESSURE (in. wg)									
	1.2		1.4		1.6		1.8		2.0	
	rpm	bhp	rpm	bhp	rpm	bhp	rpm	bhp	rpm	bhp
3000	1624	1.57	1699	1.80	1771	2.04	1840	2.29	1906	2.54
3250	1684	1.73	1757	1.97	1827	2.21	1894	2.47	1958	2.72
3500	1746	1.91	1817	2.15	1884	2.40	1950	2.66	2013	2.92
3750	1811	2.10	1879	2.34	1945	2.60	2008	2.86	2070	3.13
4000	1878	2.30	1943	2.55	2007	2.81	2069	3.08	2128	3.35
4250	1947	2.51	2010	2.76	2071	3.02	2131	3.29	2189	3.56
4500	2017	2.72	2078	2.97	2138	3.24	2195	3.50	—	—
4750	2090	2.94	2148	3.19	—	—	—	—	—	—
5000	2164	3.15	—	—	—	—	—	—	—	—

Std/Med Static 1181-2200 rpm, 3.0 Max bhp

High Static 1181-2200 rpm, 5.0 Max bhp

50GC-M12 — Standard/Medium Static — 10 Ton Vertical Supply (rpm-vdc)

CFM	AVAILABLE EXTERNAL STATIC PRESSURE (in. wg)									
	0.2		0.4		0.6		0.8		1.0	
	rpm	vdc	rpm	vdc	rpm	vdc	rpm	vdc	rpm	vdc
3000	1181	5.8	1279	6.3	1372	6.8	1461	7.2	1544	7.7
3250	1264	6.2	1356	6.7	1443	7.1	1527	7.6	1607	8.0
3500	1348	6.6	1434	7.1	1517	7.5	1596	7.9	1673	8.3
3750	1433	7.1	1514	7.5	1592	7.9	1667	8.3	1740	8.7
4000	1518	7.5	1595	7.9	1669	8.3	1740	8.7	1810	9.0
4250	1605	8.0	1677	8.3	1747	8.7	1815	9.0	1882	9.4
4500	1691	8.4	1760	8.8	1826	9.1	1892	9.4	1955	9.8
4750	1778	8.9	1843	9.2	1907	9.5	1969	9.8	—	—
5000	1866	9.3	1928	9.6	1988	9.9	—	—	—	—

CFM	AVAILABLE EXTERNAL STATIC PRESSURE (in. wg)									
	1.2		1.4		1.6		1.8		2.0	
	rpm	vdc	rpm	vdc	rpm	vdc	rpm	vdc	rpm	vdc
3000	1624	8.1	1699	8.5	1771	8.8	1840	9.2	1906	9.5
3250	1684	8.4	1757	8.8	1827	9.1	1894	9.5	—	—
3500	1746	8.7	1817	9.1	1884	9.4	—	—	—	—
3750	1811	9.0	1879	9.4	—	—	—	—	—	—
4000	1878	9.4	1943	9.7	—	—	—	—	—	—
4250	1947	9.7	—	—	—	—	—	—	—	—
4500	—	—	—	—	—	—	—	—	—	—
4750	—	—	—	—	—	—	—	—	—	—
5000	—	—	—	—	—	—	—	—	—	—

Std/Med Static 1181-2200 rpm

50GC-M12 — High Static — 10 Ton Vertical Supply (rpm-vdc)

CFM	AVAILABLE EXTERNAL STATIC PRESSURE (in. wg)									
	0.2		0.4		0.6		0.8		1.0	
	rpm	vdc	rpm	vdc	rpm	vdc	rpm	vdc	rpm	vdc
3000	1181	5.3	1279	5.7	1372	6.2	1461	6.6	1544	7.0
3250	1264	5.7	1356	6.1	1443	6.5	1527	6.9	1607	7.3
3500	1348	6.1	1434	6.5	1517	6.8	1596	7.2	1673	7.6
3750	1433	6.5	1514	6.8	1592	7.2	1667	7.5	1740	7.9
4000	1518	6.9	1595	7.2	1669	7.5	1740	7.9	1810	8.2
4250	1605	7.3	1677	7.6	1747	7.9	1815	8.2	1882	8.5
4500	1691	7.7	1760	8.0	1826	8.3	1892	8.6	1955	8.9
4750	1778	8.1	1843	8.4	1907	8.6	1969	8.9	2030	9.2
5000	1866	8.5	1928	8.7	1988	9.0	2048	9.3	2106	9.6

CFM	AVAILABLE EXTERNAL STATIC PRESSURE (in. wg)									
	1.2		1.4		1.6		1.8		2.0	
	rpm	vdc	rpm	vdc	rpm	vdc	rpm	vdc	rpm	vdc
3000	1624	7.3	1699	7.7	1771	8.0	1840	8.3	1906	8.6
3250	1684	7.6	1757	8.0	1827	8.3	1894	8.6	1958	8.9
3500	1746	7.9	1817	8.2	1884	8.5	1950	8.8	2013	9.1
3750	1811	8.2	1879	8.5	1945	8.8	2008	9.1	2070	9.4
4000	1878	8.5	1943	8.8	2007	9.1	2069	9.4	2128	9.7
4250	1947	8.8	2010	9.1	2071	9.4	2131	9.7	2189	9.9
4500	2017	9.2	2078	9.4	2138	9.7	2195	10.0	—	—
4750	2090	9.5	2148	9.8	—	—	—	—	—	—
5000	2164	9.8	—	—	—	—	—	—	—	—

High Static 1181-2200 rpm

50GC-M14 — 12.5 Ton Vertical Supply (rpm-bhp)

CFM	AVAILABLE EXTERNAL STATIC PRESSURE (in. wg)									
	0.2		0.4		0.6		0.8		1.0	
	rpm	bhp	rpm	bhp	rpm	bhp	rpm	bhp	rpm	bhp
3750	1001	0.53	1094	0.69	1190	0.89	1286	1.12	1379	1.38
4065	1075	0.65	1160	0.82	1248	1.02	1337	1.25	1424	1.51
4375	1148	0.79	1227	0.97	1308	1.17	1390	1.40	1473	1.67
4690	1224	0.96	1297	1.14	1372	1.35	1449	1.59	1525	1.85
5000	1299	1.14	1367	1.32	1437	1.54	1509	1.78	1581	2.05
5315	1375	1.34	1440	1.53	1505	1.75	1572	2.00	1640	2.27
5625	1451	1.55	1512	1.76	1574	1.98	1637	2.23	1700	2.50
5940	1529	1.79	1586	2.00	1644	2.23	1704	2.48	1763	2.75
6250	1606	2.04	1660	2.26	1715	2.49	1771	2.74	1828	3.01

CFM	AVAILABLE EXTERNAL STATIC PRESSURE (in. wg)									
	1.2		1.4		1.6		1.8		2.0	
	rpm	bhp	rpm	bhp	rpm	bhp	rpm	bhp	rpm	bhp
3750	1469	1.67	1555	1.97	1638	2.31	1716	2.65	1790	3.01
4065	1510	1.80	1593	2.12	1673	2.45	1749	2.80	1822	3.17
4375	1554	1.96	1633	2.28	1710	2.62	1784	2.97	1856	3.34
4690	1602	2.14	1677	2.46	1751	2.80	1823	3.16	1893	3.54
5000	1653	2.34	1724	2.66	1794	2.99	1864	3.36	1931	3.73
5315	1707	2.56	1775	2.87	1842	3.21	1908	3.57	1973	3.95
5625	1764	2.79	1828	3.10	1892	3.44	1955	3.80	2018	4.18
5940	1824	3.04	1885	3.36	1945	3.69	2006	4.05	2065	4.41
6250	1885	3.31	1943	3.62	2000	3.95	2058	4.30	2115	4.67

Std/Med Static 1001-2200 rpm, 3.0 Max bhp

High Static 1001-2200 rpm, 5.0 Max bhp

50GC-M14 — Standard/Medium Static — 12.5 Ton Vertical Supply (rpm-vdc)

CFM	AVAILABLE EXTERNAL STATIC PRESSURE (in. wg)									
	0.2		0.4		0.6		0.8		1.0	
	rpm	vdc	rpm	vdc	rpm	vdc	rpm	vdc	rpm	vdc
3750	1001	4.5	1094	4.9	1190	5.3	1286	5.8	1379	6.2
4065	1075	4.8	1160	5.2	1248	5.6	1337	6.0	1424	6.4
4375	1148	5.1	1227	5.5	1308	5.9	1390	6.3	1473	6.6
4690	1224	5.5	1297	5.8	1372	6.2	1449	6.5	1525	6.9
5000	1299	5.8	1367	6.2	1437	6.5	1509	6.8	1581	7.1
5315	1375	6.2	1440	6.5	1505	6.8	1572	7.1	1640	7.4
5625	1451	6.5	1512	6.8	1574	7.1	1637	7.4	1700	7.7
5940	1529	6.9	1586	7.2	1644	7.4	1704	7.7	1763	8.0
6250	1606	7.3	1660	7.5	1715	7.8	1771	8.0	1828	8.3

CFM	AVAILABLE EXTERNAL STATIC PRESSURE (in. wg)									
	1.2		1.4		1.6		1.8		2.0	
	rpm	vdc	rpm	vdc	rpm	vdc	rpm	vdc	rpm	vdc
3750	1469	6.6	1555	7.0	1638	7.4	1716	7.8	1790	8.1
4065	1510	6.8	1593	7.2	1673	7.6	1749	7.9	1822	8.3
4375	1554	7.0	1633	7.4	1710	7.7	1784	8.1	—	—
4690	1602	7.2	1677	7.6	1751	7.9	1823	8.3	—	—
5000	1653	7.5	1724	7.8	1794	8.1	—	—	—	—
5315	1707	7.7	1775	8.0	—	—	—	—	—	—
5625	1764	8.0	1828	8.3	—	—	—	—	—	—
5940	1824	8.3	—	—	—	—	—	—	—	—
6250	—	—	—	—	—	—	—	—	—	—

Std/Med Static 1001-2200 rpm

50GC-M14 — High Static — 12.5 Ton Vertical Supply (rpm-vdc)

CFM	AVAILABLE EXTERNAL STATIC PRESSURE (in. wg)									
	0.2		0.4		0.6		0.8		1.0	
	rpm	vdc	rpm	vdc	rpm	vdc	rpm	vdc	rpm	vdc
3750	1001	4.5	1094	4.9	1190	5.3	1286	5.8	1379	6.2
4065	1075	4.8	1160	5.2	1248	5.6	1337	6.0	1424	6.4
4375	1148	5.1	1227	5.5	1308	5.9	1390	6.3	1473	6.6
4690	1224	5.5	1297	5.8	1372	6.2	1449	6.5	1525	6.9
5000	1299	5.8	1367	6.2	1437	6.5	1509	6.8	1581	7.1
5315	1375	6.2	1440	6.5	1505	6.8	1572	7.1	1640	7.4
5625	1451	6.5	1512	6.8	1574	7.1	1637	7.4	1700	7.7
5940	1529	6.9	1586	7.2	1644	7.4	1704	7.7	1763	8.0
6250	1606	7.3	1660	7.5	1715	7.8	1771	8.0	1828	8.3

CFM	AVAILABLE EXTERNAL STATIC PRESSURE (in. wg)									
	1.2		1.4		1.6		1.8		2.0	
	rpm	vdc	rpm	vdc	rpm	vdc	rpm	vdc	rpm	vdc
3750	1469	6.6	1555	7.0	1638	7.4	1716	7.8	1790	8.1
4065	1510	6.8	1593	7.2	1673	7.6	1749	7.9	1822	8.3
4375	1554	7.0	1633	7.4	1710	7.7	1784	8.1	1856	8.4
4690	1602	7.2	1677	7.6	1751	7.9	1823	8.3	1893	8.6
5000	1653	7.5	1724	7.8	1794	8.1	1864	8.4	1931	8.8
5315	1707	7.7	1775	8.0	1842	8.3	1908	8.7	1973	9.0
5625	1764	8.0	1828	8.3	1892	8.6	1955	8.9	2018	9.2
5940	1824	8.3	1885	8.5	1945	8.8	2006	9.1	2065	9.4
6250	1885	8.5	1943	8.8	2000	9.1	2058	9.3	2115	9.6

High Static 1001-2200 rpm

50GC-M07 — 6 Ton Horizontal Supply (rpm-bhp)

CFM	AVAILABLE EXTERNAL STATIC PRESSURE (in. wg)									
	0.2		0.4		0.6		0.8		1.0	
	rpm	bhp	rpm	bhp	rpm	bhp	rpm	bhp	rpm	bhp
1800	752	0.16	912	0.29	1047	0.43	1167	0.60	1275	0.78
1950	794	0.19	947	0.32	1078	0.47	1195	0.65	1301	0.83
2100	838	0.22	984	0.36	1111	0.52	1225	0.69	1329	0.89
2250	883	0.26	1023	0.40	1146	0.57	1256	0.75	1358	0.94
2400	929	0.30	1063	0.45	1182	0.62	1289	0.80	1388	1.00
2550	977	0.35	1104	0.50	1219	0.68	1324	0.87	1421	1.07
2700	1025	0.40	1147	0.56	1258	0.74	1360	0.94	1454	1.14
2850	1074	0.46	1191	0.62	1298	0.81	1397	1.01	1489	1.22
3000	1123	0.52	1236	0.69	1339	0.88	1435	1.08	1525	1.30

CFM	AVAILABLE EXTERNAL STATIC PRESSURE (in. wg)									
	1.2		1.4		1.6		1.8		2.0	
	rpm	bhp	rpm	bhp	rpm	bhp	rpm	bhp	rpm	bhp
1800	1374	0.98	1465	1.19	1550	1.41	1630	1.64	1705	1.88
1950	1399	1.04	1489	1.25	1574	1.47	1653	1.71	1729	1.95
2100	1425	1.09	1514	1.31	1598	1.54	1677	1.78	1753	2.03
2250	1452	1.15	1540	1.38	1623	1.61	1702	1.86	1777	2.11
2400	1481	1.22	1568	1.45	1650	1.69	1728	1.94	1802	2.20
2550	1511	1.29	1597	1.52	1677	1.77	1754	2.02	1828	2.29
2700	1543	1.37	1627	1.60	1706	1.85	1782	2.11	1855	2.38
2850	1576	1.45	1658	1.69	1736	1.94	1811	2.20	1883	2.47
3000	1610	1.53	1691	1.77	1767	2.02	1841	2.29	1912	2.56

Std/Med Static 752-2000 rpm, 2.4 Max bhp

High Static 752-2200 rpm, 3.0 Max bhp

50GC-M07 — Standard/Medium Static — 6 Ton Horizontal Supply (rpm-vdc)

CFM	AVAILABLE EXTERNAL STATIC PRESSURE (in. wg)									
	0.2		0.4		0.6		0.8		1.0	
	rpm	vdc	rpm	vdc	rpm	vdc	rpm	vdc	rpm	vdc
1800	752	3.6	912	4.4	1047	5.1	1167	5.7	1275	6.3
1950	794	3.8	947	4.6	1078	5.3	1195	5.9	1301	6.4
2100	838	4.0	984	4.8	1111	5.4	1225	6.0	1329	6.5
2250	883	4.3	1023	5.0	1146	5.6	1256	6.2	1358	6.7
2400	929	4.5	1063	5.2	1182	5.8	1289	6.3	1388	6.9
2550	977	4.7	1104	5.4	1219	6.0	1324	6.5	1421	7.0
2700	1025	5.0	1147	5.6	1258	6.2	1360	6.7	1454	7.2
2850	1074	5.2	1191	5.8	1298	6.4	1397	6.9	1489	7.4
3000	1123	5.5	1236	6.1	1339	6.6	1435	7.1	1525	7.6

CFM	AVAILABLE EXTERNAL STATIC PRESSURE (in. wg)									
	1.2		1.4		1.6		1.8		2.0	
	rpm	vdc	rpm	vdc	rpm	vdc	rpm	vdc	rpm	vdc
1800	1374	6.8	1465	7.2	1550	7.7	1630	8.1	1705	8.5
1950	1399	6.9	1489	7.4	1574	7.8	1653	8.2	1729	8.6
2100	1425	7.0	1514	7.5	1598	7.9	1677	8.3	1753	8.7
2250	1452	7.2	1540	7.6	1623	8.1	1702	8.5	1777	8.9
2400	1481	7.3	1568	7.8	1650	8.2	1728	8.6	1802	9.0
2550	1511	7.5	1597	7.9	1677	8.3	1754	8.7	1828	9.1
2700	1543	7.6	1627	8.1	1706	8.5	1782	8.9	1855	9.3
2850	1576	7.8	1658	8.2	1736	8.6	1811	9.0	1883	9.4
3000	1610	8.0	1691	8.4	1767	8.8	1841	9.2	—	—

Std/Med Static 752-2000 rpm

50GC-M07 — High Static — 6 Ton Horizontal Supply (rpm-vdc)

CFM	AVAILABLE EXTERNAL STATIC PRESSURE (in. wg)									
	0.2		0.4		0.6		0.8		1.0	
	rpm	vdc	rpm	vdc	rpm	vdc	rpm	vdc	rpm	vdc
1800	752	3.3	912	4.1	1047	4.7	1167	5.2	1275	5.7
1950	794	3.5	947	4.2	1078	4.8	1195	5.4	1301	5.9
2100	838	3.7	984	4.4	1111	5.0	1225	5.5	1329	6.0
2250	883	3.9	1023	4.6	1146	5.1	1256	5.6	1358	6.1
2400	929	4.1	1063	4.8	1182	5.3	1289	5.8	1388	6.3
2550	977	4.4	1104	4.9	1219	5.5	1324	6.0	1421	6.4
2700	1025	4.6	1147	5.1	1258	5.7	1360	6.1	1454	6.6
2850	1074	4.8	1191	5.3	1298	5.8	1397	6.3	1489	6.7
3000	1123	5.0	1236	5.6	1339	6.0	1435	6.5	1525	6.9

CFM	AVAILABLE EXTERNAL STATIC PRESSURE (in. wg)									
	1.2		1.4		1.6		1.8		2.0	
	rpm	vdc	rpm	vdc	rpm	vdc	rpm	vdc	rpm	vdc
1800	1374	6.2	1465	6.6	1550	7.0	1630	7.4	1705	7.7
1950	1399	6.3	1489	6.7	1574	7.1	1653	7.5	1729	7.8
2100	1425	6.4	1514	6.8	1598	7.2	1677	7.6	1753	7.9
2250	1452	6.5	1540	7.0	1623	7.3	1702	7.7	1777	8.0
2400	1481	6.7	1568	7.1	1650	7.5	1728	7.8	1802	8.2
2550	1511	6.8	1597	7.2	1677	7.6	1754	7.9	1828	8.3
2700	1543	7.0	1627	7.4	1706	7.7	1782	8.1	1855	8.4
2850	1576	7.1	1658	7.5	1736	7.9	1811	8.2	1883	8.5
3000	1610	7.3	1691	7.7	1767	8.0	1841	8.3	1912	8.7

High Static 752-2200 rpm

50GC-M08 — 7.5 Ton Horizontal Supply (rpm-bhp)

CFM	AVAILABLE EXTERNAL STATIC PRESSURE (in. wg)									
	0.2		0.4		0.6		0.8		1.0	
	rpm	bhp	rpm	bhp	rpm	bhp	rpm	bhp	rpm	bhp
2250	873	0.25	1004	0.38	1126	0.53	1237	0.70	1338	0.89
2440	927	0.29	1051	0.43	1167	0.59	1274	0.76	1373	0.95
2625	982	0.35	1098	0.48	1208	0.65	1311	0.83	1408	1.02
2815	1040	0.41	1148	0.55	1252	0.71	1352	0.90	1445	1.10
3000	1097	0.48	1199	0.62	1298	0.79	1393	0.98	1484	1.18
3190	1156	0.55	1252	0.70	1346	0.87	1437	1.06	1525	1.27
3375	1214	0.63	1305	0.79	1395	0.96	1482	1.15	1566	1.36
3565	1275	0.72	1361	0.88	1446	1.05	1530	1.25	1611	1.46
3750	1334	0.81	1416	0.97	1498	1.15	1578	1.34	1656	1.55

CFM	AVAILABLE EXTERNAL STATIC PRESSURE (in. wg)									
	1.2		1.4		1.6		1.8		2.0	
	rpm	bhp	rpm	bhp	rpm	bhp	rpm	bhp	rpm	bhp
2250	1431	1.09	1517	1.30	1597	1.51	1673	1.74	1744	1.97
2440	1464	1.16	1549	1.37	1629	1.59	1704	1.83	1775	2.06
2625	1498	1.23	1582	1.45	1661	1.68	1736	1.92	1807	2.16
2815	1533	1.31	1616	1.54	1694	1.77	1769	2.01	1839	2.26
3000	1569	1.39	1651	1.63	1728	1.86	1801	2.11	1871	2.37
3190	1608	1.49	1688	1.72	1764	1.96	1836	2.21	1905	2.47
3375	1647	1.58	1725	1.82	1799	2.06	1871	2.32	1939	2.58
3565	1689	1.68	1765	1.91	1838	2.16	1908	2.42	1975	2.68
3750	1731	1.77	1805	2.01	1876	2.25	1944	2.51	2011	2.78

Std/Med Static 873-2000 rpm, 2.4 Max bhp

High Static 873-2200 rpm, 3.0 Max bhp

50GC-M08 — Standard/Medium Static — 7.5 Ton Horizontal Supply (rpm-vdc)

CFM	AVAILABLE EXTERNAL STATIC PRESSURE (in. wg)									
	0.2		0.4		0.6		0.8		1.0	
	rpm	vdc	rpm	vdc	rpm	vdc	rpm	vdc	rpm	vdc
2250	873	4.2	1004	4.9	1126	5.5	1237	6.1	1338	6.6
2440	927	4.5	1051	5.1	1167	5.7	1274	6.3	1373	6.8
2625	982	4.8	1098	5.4	1208	5.9	1311	6.5	1408	7.0
2815	1040	5.1	1148	5.6	1252	6.2	1352	6.7	1445	7.1
3000	1097	5.4	1199	5.9	1298	6.4	1393	6.9	1484	7.3
3190	1156	5.7	1252	6.2	1346	6.6	1437	7.1	1525	7.6
3375	1214	6.0	1305	6.4	1395	6.9	1482	7.3	1566	7.8
3565	1275	6.3	1361	6.7	1446	7.2	1530	7.6	1611	8.0
3750	1334	6.6	1416	7.0	1498	7.4	1578	7.8	1656	8.2

CFM	AVAILABLE EXTERNAL STATIC PRESSURE (in. wg)									
	1.2		1.4		1.6		1.8		2.0	
	rpm	vdc	rpm	vdc	rpm	vdc	rpm	vdc	rpm	vdc
2250	1431	7.1	1517	7.5	1597	7.9	1673	8.3	1744	8.7
2440	1464	7.2	1549	7.7	1629	8.1	1704	8.5	1775	8.8
2625	1498	7.4	1582	7.9	1661	8.3	1736	8.6	1807	9.0
2815	1533	7.6	1616	8.0	1694	8.4	1769	8.8	1839	9.2
3000	1569	7.8	1651	8.2	1728	8.6	1801	9.0	1871	9.3
3190	1608	8.0	1688	8.4	1764	8.8	1836	9.2	1905	9.5
3375	1647	8.2	1725	8.6	1799	9.0	1871	9.3	—	—
3565	1689	8.4	1765	8.8	1838	9.2	1908	9.5	—	—
3750	1731	8.6	1805	9.0	1876	9.4	1944	9.7	—	—

Std/Med Static 873-2000 rpm

Fan data (cont)

50GC-M08 — High Static — 7.5 Ton Horizontal Supply (rpm-vdc)

CFM	AVAILABLE EXTERNAL STATIC PRESSURE (in. wg)									
	0.2		0.4		0.6		0.8		1.0	
	rpm	vdc	rpm	vdc	rpm	vdc	rpm	vdc	rpm	vdc
2250	873	3.9	1004	4.5	1126	5.0	1237	5.6	1338	6.0
2440	927	4.1	1051	4.7	1167	5.2	1274	5.7	1373	6.2
2625	982	4.4	1098	4.9	1208	5.4	1311	5.9	1408	6.3
2815	1040	4.6	1148	5.1	1252	5.6	1352	6.1	1445	6.5
3000	1097	4.9	1199	5.4	1298	5.8	1393	6.3	1484	6.7
3190	1156	5.2	1252	5.6	1346	6.1	1437	6.5	1525	6.9
3375	1214	5.4	1305	5.9	1395	6.3	1482	6.7	1566	7.1
3565	1275	5.7	1361	6.1	1446	6.5	1530	6.9	1611	7.3
3750	1334	6.0	1416	6.4	1498	6.8	1578	7.1	1656	7.5

CFM	AVAILABLE EXTERNAL STATIC PRESSURE (in. wg)									
	1.2		1.4		1.6		1.8		2.0	
	rpm	vdc	rpm	vdc	rpm	vdc	rpm	vdc	rpm	vdc
2250	1431	6.5	1517	6.8	1597	7.2	1673	7.6	1744	7.9
2440	1464	6.6	1549	7.0	1629	7.4	1704	7.7	1775	8.0
2625	1498	6.8	1582	7.1	1661	7.5	1736	7.9	1807	8.2
2815	1533	6.9	1616	7.3	1694	7.7	1769	8.0	1839	8.3
3000	1569	7.1	1651	7.5	1728	7.8	1801	8.2	1871	8.5
3190	1608	7.3	1688	7.6	1764	8.0	1836	8.3	1905	8.6
3375	1647	7.4	1725	7.8	1799	8.1	1871	8.5	1939	8.8
3565	1689	7.6	1765	8.0	1838	8.3	1908	8.7	1975	9.0
3750	1731	7.8	1805	8.2	1876	8.5	1944	8.8	2011	9.1

High Static 873-2200 rpm

50GC-M09 — 8.5 Ton Horizontal Supply (rpm-bhp)

CFM	AVAILABLE EXTERNAL STATIC PRESSURE (in. wg)									
	0.2		0.4		0.6		0.8		1.0	
	rpm	bhp	rpm	bhp	rpm	bhp	rpm	bhp	rpm	bhp
2550	964	0.33	1083	0.47	1196	0.64	1301	0.82	1398	1.02
2765	1029	0.40	1140	0.55	1246	0.72	1346	0.90	1441	1.11
2975	1094	0.48	1197	0.63	1297	0.80	1393	0.99	1484	1.20
3190	1161	0.57	1258	0.72	1352	0.90	1443	1.09	1531	1.31
3400	1228	0.67	1319	0.83	1408	1.01	1495	1.20	1579	1.42
3615	1297	0.78	1382	0.94	1467	1.12	1549	1.32	1630	1.54
3825	1365	0.89	1446	1.06	1526	1.25	1604	1.45	1681	1.67
4040	1435	1.02	1512	1.20	1587	1.38	1662	1.59	1736	1.81
4250	1504	1.16	1577	1.33	1649	1.52	1721	1.73	1791	1.95

CFM	AVAILABLE EXTERNAL STATIC PRESSURE (in. wg)									
	1.2		1.4		1.6		1.8		2.0	
	rpm	bhp	rpm	bhp	rpm	bhp	rpm	bhp	rpm	bhp
2550	1489	1.23	1573	1.45	1652	1.68	1727	1.92	1798	2.17
2765	1529	1.32	1612	1.55	1691	1.79	1765	2.04	1835	2.29
2975	1570	1.42	1652	1.66	1729	1.90	1802	2.15	1872	2.41
3190	1614	1.53	1694	1.77	1770	2.02	1842	2.27	1911	2.54
3400	1659	1.65	1737	1.89	1811	2.14	1882	2.40	1950	2.67
3615	1707	1.77	1782	2.02	1855	2.27	1924	2.54	1991	2.81
3825	1756	1.90	1829	2.15	1899	2.41	1967	2.68	2033	2.95
4040	1808	2.05	1878	2.29	1946	2.55	2013	2.82	2077	3.10
4250	1860	2.19	1928	2.44	1994	2.69	2059	2.97	—	—

Std/Med Static 964-2000 rpm, 2.4 Max bhp

High Static 964-2200 rpm, 5.0 Max bhp

50GC-M09 — Standard/Medium Static — 8.5 Ton Horizontal Supply (rpm-vdc)

CFM	AVAILABLE EXTERNAL STATIC PRESSURE (in. wg)									
	0.2		0.4		0.6		0.8		1.0	
	rpm	vdc	rpm	vdc	rpm	vdc	rpm	vdc	rpm	vdc
2550	964	4.7	1083	5.3	1196	5.9	1301	6.4	1398	6.9
2765	1029	5.0	1140	5.6	1246	6.1	1346	6.6	1441	7.1
2975	1094	5.3	1197	5.9	1297	6.4	1393	6.9	1484	7.3
3190	1161	5.7	1258	6.2	1352	6.7	1443	7.1	1531	7.6
3400	1228	6.0	1319	6.5	1408	7.0	1495	7.4	1579	7.8
3615	1297	6.4	1382	6.8	1467	7.3	1549	7.7	1630	8.1
3825	1365	6.7	1446	7.2	1526	7.6	1604	8.0	1681	8.4
4040	1435	7.1	1512	7.5	1587	7.9	1662	8.3	1736	8.6
4250	1504	7.4	1577	7.8	1649	8.2	1721	8.6	1791	8.9

CFM	AVAILABLE EXTERNAL STATIC PRESSURE (in. wg)									
	1.2		1.4		1.6		1.8		2.0	
	rpm	vdc	rpm	vdc	rpm	vdc	rpm	vdc	rpm	vdc
2550	1489	7.4	1573	7.8	1652	8.2	1727	8.6	1798	9.0
2765	1529	7.6	1612	8.0	1691	8.4	1765	8.8	1835	9.2
2975	1570	7.8	1652	8.2	1729	8.6	1802	9.0	1872	9.3
3190	1614	8.0	1694	8.4	1770	8.8	1842	9.2	1911	9.5
3400	1659	8.2	1737	8.6	1811	9.0	1882	9.4	—	—
3615	1707	8.5	1782	8.9	1855	9.3	1924	9.6	—	—
3825	1756	8.7	1829	9.1	1899	9.5	—	—	—	—
4040	1808	9.0	1878	9.4	—	—	—	—	—	—
4250	1860	9.3	1928	9.6	—	—	—	—	—	—

Std/Med Static 964-2000 rpm

Fan data (cont)

50GC-M09 — High Static — 8.5 Ton Horizontal Supply (rpm-vdc)

CFM	AVAILABLE EXTERNAL STATIC PRESSURE (in. wg)									
	0.2		0.4		0.6		0.8		1.0	
	rpm	vdc	rpm	vdc	rpm	vdc	rpm	vdc	rpm	vdc
2550	964	4.3	1083	4.8	1196	5.4	1301	5.9	1398	6.3
2765	1029	4.6	1140	5.1	1246	5.6	1346	6.1	1441	6.5
2975	1094	4.9	1197	5.4	1297	5.8	1393	6.3	1484	6.7
3190	1161	5.2	1258	5.7	1352	6.1	1443	6.5	1531	6.9
3400	1228	5.5	1319	5.9	1408	6.3	1495	6.7	1579	7.1
3615	1297	5.8	1382	6.2	1467	6.6	1549	7.0	1630	7.4
3825	1365	6.1	1446	6.5	1526	6.9	1604	7.2	1681	7.6
4040	1435	6.5	1512	6.8	1587	7.2	1662	7.5	1736	7.9
4250	1504	6.8	1577	7.1	1649	7.5	1721	7.8	1791	8.1

CFM	AVAILABLE EXTERNAL STATIC PRESSURE (in. wg)									
	1.2		1.4		1.6		1.8		2.0	
	rpm	vdc	rpm	vdc	rpm	vdc	rpm	vdc	rpm	vdc
2550	1489	6.7	1573	7.1	1652	7.5	1727	7.8	1798	8.1
2765	1529	6.9	1612	7.3	1691	7.7	1765	8.0	1835	8.3
2975	1570	7.1	1652	7.5	1729	7.8	1802	8.2	1872	8.5
3190	1614	7.3	1694	7.7	1770	8.0	1842	8.3	1911	8.7
3400	1659	7.5	1737	7.9	1811	8.2	1882	8.5	1950	8.8
3615	1707	7.7	1782	8.1	1855	8.4	1924	8.7	1991	9.0
3825	1756	8.0	1829	8.3	1899	8.6	1967	8.9	2033	9.2
4040	1808	8.2	1878	8.5	1946	8.8	2013	9.1	2077	9.4
4250	1860	8.4	1928	8.7	1994	9.0	2059	9.3	—	—

High Static 964-2200 rpm

50GC-M12 — 10 Ton Horizontal Supply (rpm-bhp)

CFM	AVAILABLE EXTERNAL STATIC PRESSURE (in. wg)									
	0.2		0.4		0.6		0.8		1.0	
	rpm	bhp	rpm	bhp	rpm	bhp	rpm	bhp	rpm	bhp
3000	1100	0.49	1202	0.64	1301	0.81	1396	1.00	1487	1.21
3250	1176	0.59	1270	0.74	1363	0.92	1453	1.11	1539	1.32
3500	1252	0.70	1341	0.86	1428	1.04	1512	1.24	1595	1.45
3750	1330	0.83	1413	1.00	1495	1.18	1575	1.38	1653	1.60
4000	1409	0.97	1487	1.14	1563	1.33	1639	1.53	1714	1.75
4250	1488	1.12	1561	1.29	1634	1.48	1706	1.69	1776	1.90
4500	1568	1.28	1637	1.45	1706	1.65	1774	1.85	1841	2.07
4750	1648	1.44	1714	1.62	1779	1.81	1844	2.02	1908	2.23
5000	1728	1.61	1791	1.79	1853	1.98	1915	2.19	1976	2.40

CFM	AVAILABLE EXTERNAL STATIC PRESSURE (in. wg)									
	1.2		1.4		1.6		1.8		2.0	
	rpm	bhp	rpm	bhp	rpm	bhp	rpm	bhp	rpm	bhp
3750	1573	1.43	1654	1.66	1732	1.91	1805	2.16	1875	2.42
4060	1622	1.55	1702	1.79	1777	2.04	1849	2.29	1919	2.57
4375	1674	1.68	1751	1.92	1825	2.18	1895	2.44	1964	2.72
4690	1729	1.83	1803	2.07	1874	2.33	1943	2.59	2010	2.87
5000	1786	1.98	1857	2.22	1926	2.48	1993	2.75	2058	3.03
5310	1846	2.14	1914	2.38	1980	2.64	2045	2.91	2108	3.18
5625	1908	2.30	1973	2.54	2036	2.80	2099	3.06	2160	3.34
5940	1971	2.46	2034	2.71	2095	2.96	2155	3.22	—	—
6250	2036	2.63	2096	2.87	2155	3.11	—	—	—	—

Std/Med Static 1100-2200 rpm, 3.0 Max bhp

High Static 1100-2200 rpm, 5.0 Max bhp

50GC-M12 — Standard/Medium Static — 10 Ton Horizontal Supply (rpm-vdc)

CFM	AVAILABLE EXTERNAL STATIC PRESSURE (in. wg)									
	0.2		0.4		0.6		0.8		1.0	
	rpm	vdc	rpm	vdc	rpm	vdc	rpm	vdc	rpm	vdc
3750	1100	5.4	1202	5.9	1301	6.4	1396	6.9	1487	7.4
4060	1176	5.8	1270	6.2	1363	6.7	1453	7.2	1539	7.6
4375	1252	6.2	1341	6.6	1428	7.1	1512	7.5	1595	7.9
4690	1330	6.6	1413	7.0	1495	7.4	1575	7.8	1653	8.2
5000	1409	7.0	1487	7.4	1563	7.8	1639	8.1	1714	8.5
5310	1488	7.4	1561	7.7	1634	8.1	1706	8.5	1776	8.8
5625	1568	7.8	1637	8.1	1706	8.5	1774	8.8	1841	9.2
5940	1648	8.2	1714	8.5	1779	8.9	1844	9.2	1908	9.5
6250	1728	8.6	1791	8.9	1853	9.2	1915	9.6	1976	9.9

CFM	AVAILABLE EXTERNAL STATIC PRESSURE (in. wg)									
	1.2		1.4		1.6		1.8		2.0	
	rpm	vdc	rpm	vdc	rpm	vdc	rpm	vdc	rpm	vdc
3750	1573	7.8	1654	8.2	1732	8.6	1805	9.0	1875	9.4
4060	1622	8.1	1702	8.5	1777	8.9	1849	9.2	—	—
4375	1674	8.3	1751	8.7	1825	9.1	1895	9.5	—	—
4690	1729	8.6	1803	9.0	1874	9.4	—	—	—	—
5000	1786	8.9	1857	9.3	1926	9.6	—	—	—	—
5310	1846	9.2	1914	9.6	—	—	—	—	—	—
5625	1908	9.5	1973	9.9	—	—	—	—	—	—
5940	1971	9.9	—	—	—	—	—	—	—	—
6250	—	—	—	—	—	—	—	—	—	—

Std/Med Static 1100-2200 rpm

Fan data (cont)

50GC-M12 — High Static — 10 Ton Horizontal Supply (rpm-vdc)

CFM	AVAILABLE EXTERNAL STATIC PRESSURE (in. wg)									
	0.2		0.4		0.6		0.8		1.0	
	rpm	vdc	rpm	vdc	rpm	vdc	rpm	vdc	rpm	vdc
3750	1100	4.9	1202	5.4	1301	5.9	1396	6.3	1487	6.7
4060	1176	5.3	1270	5.7	1363	6.1	1453	6.6	1539	6.9
4375	1252	5.6	1341	6.0	1428	6.4	1512	6.8	1595	7.2
4690	1330	6.0	1413	6.4	1495	6.7	1575	7.1	1653	7.5
5000	1409	6.3	1487	6.7	1563	7.1	1639	7.4	1714	7.8
5310	1488	6.7	1561	7.1	1634	7.4	1706	7.7	1776	8.0
5625	1568	7.1	1637	7.4	1706	7.7	1774	8.0	1841	8.3
5940	1648	7.5	1714	7.8	1779	8.1	1844	8.4	1908	8.7
6250	1728	7.8	1791	8.1	1853	8.4	1915	8.7	1976	9.0

CFM	AVAILABLE EXTERNAL STATIC PRESSURE (in. wg)									
	1.2		1.4		1.6		1.8		2.0	
	rpm	vdc	rpm	vdc	rpm	vdc	rpm	vdc	rpm	vdc
3750	1573	7.1	1654	7.5	1732	7.8	1805	8.2	1875	8.5
4060	1622	7.3	1702	7.7	1777	8.0	1849	8.4	1919	8.7
4375	1674	7.6	1751	7.9	1825	8.3	1895	8.6	1964	8.9
4690	1729	7.8	1803	8.2	1874	8.5	1943	8.8	2010	9.1
5000	1786	8.1	1857	8.4	1926	8.7	1993	9.0	2058	9.3
5310	1846	8.4	1914	8.7	1980	9.0	2045	9.3	2108	9.6
5625	1908	8.7	1973	9.0	2036	9.2	2099	9.5	2160	9.8
5940	1971	8.9	2034	9.2	2095	9.5	2155	9.8	—	—
6250	2036	9.2	2096	9.5	2155	9.8	—	—	—	—

High Static 1100-2200 rpm

50GC-M14 — 12.5 Ton Horizontal Supply (rpm-bhp)

CFM	AVAILABLE EXTERNAL STATIC PRESSURE (in. wg)									
	0.2		0.4		0.6		0.8		1.0	
	rpm	bhp	rpm	bhp	rpm	bhp	rpm	bhp	rpm	bhp
3750	1003	0.53	1097	0.69	1193	0.89	1289	1.12	1382	1.39
4065	1077	0.65	1163	0.82	1251	1.03	1340	1.26	1427	1.52
4375	1151	0.80	1230	0.97	1312	1.18	1394	1.42	1476	1.68
4690	1227	0.96	1300	1.14	1376	1.36	1452	1.60	1529	1.86
5000	1302	1.14	1371	1.34	1441	1.55	1513	1.79	1585	2.06
5315	1379	1.35	1443	1.54	1509	1.77	1576	2.01	1644	2.28
5625	1455	1.57	1516	1.77	1578	2.00	1641	2.25	1705	2.52
5940	1533	1.81	1590	2.01	1649	2.25	1708	2.50	1768	2.77
6250	1609	2.06	1664	2.27	1720	2.51	1776	2.76	1833	3.04

CFM	AVAILABLE EXTERNAL STATIC PRESSURE (in. wg)									
	1.2		1.4		1.6		1.8		2.0	
	rpm	bhp	rpm	bhp	rpm	bhp	rpm	bhp	rpm	bhp
3750	1471	1.67	1557	1.98	1638	2.31	1716	2.65	1789	3.01
4065	1513	1.82	1595	2.13	1674	2.46	1750	2.81	1823	3.18
4375	1557	1.97	1636	2.29	1712	2.62	1786	2.98	1857	3.35
4690	1606	2.16	1681	2.48	1754	2.81	1825	3.17	1895	3.55
5000	1657	2.36	1728	2.67	1798	3.01	1867	3.37	1934	3.75
5315	1712	2.58	1779	2.89	1846	3.23	1912	3.59	1977	3.97
5625	1769	2.81	1833	3.13	1896	3.46	1959	3.82	2022	4.20
5940	1829	3.07	1890	3.38	1950	3.72	2010	4.07	2070	4.44
6250	1890	3.33	1948	3.65	2005	3.98	2063	4.33	2120	4.70

Std/Med Static 1003-2200 rpm, 3.0 Max bhp

High Static 1003-2200 rpm, 5.0 Max bhp

50GC-M14 — Standard/medium Static — 12.5 Ton Horizontal Supply (rpm-vdc)

CFM	AVAILABLE EXTERNAL STATIC PRESSURE (in. wg)									
	0.2		0.4		0.6		0.8		1.0	
	rpm	vdc	rpm	vdc	rpm	vdc	rpm	vdc	rpm	vdc
3750	1003	4.5	1097	4.9	1193	5.4	1289	5.8	1382	6.2
4065	1077	4.8	1163	5.2	1251	5.6	1340	6.0	1427	6.4
4375	1151	5.2	1230	5.5	1312	5.9	1394	6.3	1476	6.7
4690	1227	5.5	1300	5.8	1376	6.2	1452	6.5	1529	6.9
5000	1302	5.9	1371	6.2	1441	6.5	1513	6.8	1585	7.2
5315	1379	6.2	1443	6.5	1509	6.8	1576	7.1	1644	7.4
5625	1455	6.6	1516	6.8	1578	7.1	1641	7.4	1705	7.7
5940	1533	6.9	1590	7.2	1649	7.5	1708	7.7	1768	8.0
6250	1609	7.3	1664	7.5	1720	7.8	1776	8.0	1833	8.3

CFM	AVAILABLE EXTERNAL STATIC PRESSURE (in. wg)									
	1.2		1.4		1.6		1.8		2.0	
	rpm	vdc	rpm	vdc	rpm	vdc	rpm	vdc	rpm	vdc
3750	1471	6.6	1557	7.0	1638	7.4	1716	7.8	1789	8.1
4065	1513	6.8	1595	7.2	1674	7.6	1750	7.9	1823	8.3
4375	1557	7.0	1636	7.4	1712	7.7	1786	8.1	—	—
4690	1606	7.3	1681	7.6	1754	7.9	1825	8.3	—	—
5000	1657	7.5	1728	7.8	1798	8.1	—	—	—	—
5315	1712	7.7	1779	8.1	—	—	—	—	—	—
5625	1769	8.0	1833	8.3	—	—	—	—	—	—
5940	1829	8.3	—	—	—	—	—	—	—	—
6250	—	—	—	—	—	—	—	—	—	—

Std/Med Static 1003-2200 rpm

Fan data (cont)

50GC-M14 — High Static — 12.5 Ton Horizontal Supply (rpm-vdc)

CFM	AVAILABLE EXTERNAL STATIC PRESSURE (in. wg)									
	0.2		0.4		0.6		0.8		1.0	
	rpm	vdc	rpm	vdc	rpm	vdc	rpm	vdc	rpm	vdc
3750	1003	4.5	1097	4.9	1193	5.4	1289	5.8	1382	6.2
4065	1077	4.8	1163	5.2	1251	5.6	1340	6.0	1427	6.4
4375	1151	5.2	1230	5.5	1312	5.9	1394	6.3	1476	6.7
4690	1227	5.5	1300	5.8	1376	6.2	1452	6.5	1529	6.9
5000	1302	5.9	1371	6.2	1441	6.5	1513	6.8	1585	7.2
5315	1379	6.2	1443	6.5	1509	6.8	1576	7.1	1644	7.4
5625	1455	6.6	1516	6.8	1578	7.1	1641	7.4	1705	7.7
5940	1533	6.9	1590	7.2	1649	7.5	1708	7.7	1768	8.0
6250	1609	7.3	1664	7.5	1720	7.8	1776	8.0	1833	8.3

CFM	AVAILABLE EXTERNAL STATIC PRESSURE (in. wg)									
	1.2		1.4		1.6		1.8		2.0	
	rpm	vdc	rpm	vdc	rpm	vdc	rpm	vdc	rpm	vdc
3750	1471	6.6	1557	7.0	1638	7.4	1716	7.8	1789	8.1
4065	1513	6.8	1595	7.2	1674	7.6	1750	7.9	1823	8.3
4375	1557	7.0	1636	7.4	1712	7.7	1786	8.1	1857	8.4
4690	1606	7.3	1681	7.6	1754	7.9	1825	8.3	1895	8.6
5000	1657	7.5	1728	7.8	1798	8.1	1867	8.5	1934	8.8
5315	1712	7.7	1779	8.1	1846	8.4	1912	8.7	1977	9.0
5625	1769	8.0	1833	8.3	1896	8.6	1959	8.9	2022	9.2
5940	1829	8.3	1890	8.6	1950	8.8	2010	9.1	2070	9.4
6250	1890	8.6	1948	8.8	2005	9.1	2063	9.4	2120	9.6

High Static 1003-2200 rpm

Legend and Notes

Applicable for Electrical Data Tables on pages 103 to 130

LEGEND

BRKR — Circuit Breaker
C.O. — Convenience Outlet
FLA — Full Load Amps
IFM — Indoor Fan Motor
LRA — Locked Rotor Amps
MCA — Minimum Circuit Amps
P.E. — Power Exhaust
PWRD C.O. — Powered Convenience Outlet
RLA — Rated Load Amps
SCCR — Short Circuit Current Rating
UNPWR C.O. — Unpowered Convenience Outlet

NOTES:

1. In compliance with NEC requirements for multi-motor and combination load equipment (refer to NEC Articles 430 and 440), the overcurrent protective device for the unit shall be fuse or HACR breaker. Canadian units may be fuse or circuit breaker.
2. For 208/230 v units, where one value is show it is the same for either 208 or 230 volts.
3. **Unbalanced 3-Phase Supply Voltage**: Never operate a motor where a phase imbalance in supply voltage is greater than 2%. Use the following formula to determine the percentage of voltage imbalance.

$$\text{\% Voltage Imbalance} = 100 \times \frac{\text{max voltage deviation from average voltage}}{\text{average voltage}}$$

Example: Supply voltage is 230-3-60

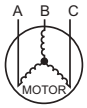

AB = 224-v
BC = 231-v
AC = 226-v

$$\text{Average Voltage} = \frac{(224 + 231 + 226)}{3} = \frac{681}{3} = 227$$

Determine maximum deviation from average voltage.
(AB) 227-224 = 3-v
(BC) 231-227 = 4-v
(AC) 227-226 = 1-v
Maximum deviation is 4-v.
Determine percent of voltage imbalance.

$$\text{\% Voltage Imbalance} = 100\text{x} \frac{4}{227} = 1.76\%$$

This amount of phase imbalance is satisfactory as it is below the maximum allowable 2%.

IMPORTANT: If the supply voltage phase imbalance is more than 2%, contact your local electric utility company immediately.

48/50GC**07-14 Cooling Electrical Data

48/50GC UNIT SIZE	V-Ph-Hz	UNIT VOLTAGE RANGE		COMP 1		COMP 2		OFM (EA)		STD SCCR kA	HIGH SCCR kA	IFM			COMBUSTION FAN MOTOR (48 SERIES ONLY)	POWER EXHAUST	
		MIN	MAX	RLA	LRA	RLA	LRA	WATTS	FLA			TYPE	EFFCY AT FULL LOAD	FLA	FLA	KIT QTY	FLA (EA KIT)
07	208-3-60	187	253	13.5	88	8.9	58	325	1.5	5	10	MED	90%	6.4	0.48	1	3.8
												HIGH		7.5			
	230-3-60	187	253	13.5	88	8.9	58	325	1.5	5	10	MED	90%	6.4	0.48	1	3.8
												HIGH		7.5			
	460-3-60	414	506	6.0	44	4.2	28	325	0.8	5	10	MED	90%	3.0	0.25	1	1.8
												HIGH		3.5			
	575-3-60	518	633	4.9	34	3.5	24	325	0.6	5	—	MED	90%	2.5	0.24	1	3.8
												HIGH		3.0			
08	208-3-60	187	253	15.9	110	9.0	71	325	1.5	5	10	MED	90%	6.4	0.48	1	3.8
												HIGH		7.5			
	230-3-60	187	253	15.9	110	9.0	71	325	1.5	5	10	MED	90%	6.4	0.48	1	3.8
												HIGH		7.5			
	460-3-60	414	506	7.1	52	5.6	38	325	0.8	5	10	MED	90%	3.0	0.25	1	1.8
												HIGH		3.5			
	575-3-60	518	633	5.1	40	3.8	37	325	0.6	5	—	MED	90%	2.5	0.24	1	3.8
												HIGH		3.0			
09	208-3-60	187	253	15.9	110	13.5	88	325	1.5	5	10	MED	90%	6.4	0.48	1	3.8
												HIGH		7.5			
	230-3-60	187	253	15.9	110	13.5	88	325	1.5	5	10	MED	90%	6.4	0.48	1	3.8
												HIGH		7.5			
	460-3-60	414	506	7.1	52	6.0	44	325	0.8	5	10	MED	90%	3.0	0.25	1	1.8
												HIGH		3.5			
	575-3-60	518	633	5.1	40	4.9	34	325	0.6	5	—	MED	90%	2.5	0.24	1	3.8
												HIGH		3.0			
12	208-3-60	187	253	19.6	136	13.7	83	1070	7.4	5	—	MED	90%	6.4	0.48	1	3.8
												HIGH		12.6			
	230-3-60	187	253	19.6	136	13.7	83	1070	7.4	5	—	MED	90%	6.4	0.48	1	3.8
												HIGH		12.6			
	460-3-60	414	506	8.2	66	6.2	41	1070	7.4	5	—	MED	90%	3.0	0.25	1	1.8
												HIGH		5.6			
	575-3-60	518	633	6.6	55	4.8	33	1070	7.4	5	—	MED	90%	2.5	0.24	1	3.8
												HIGH		4.6			
14	208-3-60	187	253	25.0	164	15.9	110	280	1.5	5	10	MED	90%	7.5	0.48	1	3.8
												HIGH		12.6			
	230-3-60	187	253	25.0	164	15.9	110	280	1.5	5	10	MED	90%	7.5	0.48	1	3.8
												HIGH		12.6			
	460-3-60	414	506	12.8	100	7.1	52	280	0.8	5	10	MED	90%	3.5	0.25	1	1.8
												HIGH		5.6			
	575-3-60	518	633	9.6	78	5.1	40	280	0.6	5	—	MED	90%	3.0	0.24	1	3.8
												HIGH		4.6			

48GC**07-14 MCA MOCP Electrical Data

48GC UNIT SIZE	NOM. V-Ph-Hz	IFM TYPE	STD SCCR kA	HIGH SCCR kA[a]	NO CONVENIENCE OUTLET OR UNPOWERED CONVENIENCE OUTLET							
					NO POWER EXHAUST				WITH POWER EXHAUST (powered from unit)			
					MCA	FUSE OR HACR BREAKER	DISCONNECT SIZE		MCA	FUSE OR HACR BREAKER	DISCONNECT SIZE	
							FLA	LRA			FLA	LRA
48GC**07	208/230-3-60	STD/MED	5	10	36	45	37	163	39	50	41	167
		HIGH	5	10	37	45	38	165	41	50	42	169
	460-3-60	STD/MED	5	10	17	20	17	80	19	20	19	82
		HIGH	5	10	17	20	18	83	19	25	20	85
	575-3-60	STD/MED	5	10	14	15	14	66	18	20	18	70
		HIGH	5	—	14	20	14	67	18	20	19	71
48GC**08	208/230-3-60	STD/MED	5	10	39	50	39	198	43	50	44	202
		HIGH	5	10	40	50	41	200	44	50	45	204
	460-3-60	STD/MED	5	10	20	25	20	98	21	25	22	100
		HIGH	5	10	20	25	20	101	22	25	23	103
	575-3-60	STD/MED	5	—	14	20	14	85	18	20	19	89
		HIGH	5	—	15	20	15	86	19	20	19	90
48GC**09	208/230-3-60	STD/MED	5	10	43	50	45	215	47	60	49	219
		HIGH	5	10	44	50	46	217	48	60	50	221
	460-3-60	STD/MED	5	10	20	25	20	104	22	25	22	106
		HIGH	5	10	20	25	21	107	22	25	23	109
	575-3-60	STD/MED	5	—	15	20	16	82	19	25	20	86
		HIGH	5	—	16	20	16	83	20	25	21	87
48GC**12	208/230-3-60	STD/MED	5	—	52	60	54	235	56	70	59	239
		HIGH	5	—	59	70	61	244	62	80	66	248
	460-3-60	STD/MED	5	—	27	30	29	118	29	35	31	120
		HIGH	5	—	30	35	32	122	32	35	34	124
	575-3-60	STD/MED	5	—	23	25	24	99	27	30	29	103
		HIGH	5	—	26	30	27	101	29	35	31	105
48GC**14	208/230-3-60	STD/MED	5	10	60	80	61	297	63	80	65	301
		HIGH	5	10	65	80	67	304	69	80	71	308
	460-3-60	STD/MED	5	10	29	40	30	165	31	40	32	167
		HIGH	5	10	32	40	32	166	33	45	34	168
	575-3-60	STD/MED	5	—	22	30	22	129	26	30	27	133
		HIGH	5	—	24	30	24	130	28	30	29	134

NOTE(S):

a. High SCCR (Short Circuit Current Rating) is not available on the following: units with Humidi-MiZer system, Low Ambient controls, Phase loss monitor, Non-fused disconnect, and 575V.

48GC**07-14 MCA MOCP Electrical Data (cont)

48GC UNIT SIZE	NOM. V-Ph-Hz	IFM TYPE	STD SCCR kA	WITH POWERED CONVENIENCE OUTLET							
				NO POWER EXHAUST				WITH POWER EXHAUST (powered from unit)			
				MCA	FUSE OR HACR BREAKER	DISCONNECT SIZE		MCA	FUSE OR HACR BREAKER	DISCONNECT SIZE	
						FLA	LRA			FLA	LRA
48GC**07	208/230-3-60	STD/MED	5	40	50	42	168	44	50	46	172
		HIGH	5	42	50	43	170	45	50	48	174
	460-3-60	STD/MED	5	19	25	20	82	21	25	22	84
		HIGH	5	19	25	20	85	21	25	22	87
	575-3-60	STD/MED	5	15	20	16	68	19	25	20	72
		HIGH	5	16	20	16	69	20	25	21	73
48GC**08	208/230-3-60	STD/MED	5	44	50	45	203	47	60	49	207
		HIGH	5	45	60	46	205	48	60	51	209
	460-3-60	STD/MED	5	22	25	22	100	24	30	24	102
		HIGH	5	22	25	23	103	24	30	25	105
	575-3-60	STD/MED	5	16	20	16	87	20	25	21	91
		HIGH	5	17	20	17	88	20	25	21	92
48GC**09	208/230-3-60	STD/MED	5	48	60	50	220	52	60	55	224
		HIGH	5	49	60	51	222	53	60	56	226
	460-3-60	STD/MED	5	22	25	23	106	24	30	25	108
		HIGH	5	23	25	23	109	24	30	26	111
	575-3-60	STD/MED	5	17	20	18	84	21	25	22	88
		HIGH	5	18	20	18	85	21	25	23	89
48GC**12	208/230-3-60	STD/MED	5	57	70	60	240	61	80	64	244
		HIGH	5	63	80	67	249	67	80	71	253
	460-3-60	STD/MED	5	30	35	31	120	31	35	33	122
		HIGH	5	32	35	34	124	34	40	36	126
	575-3-60	STD/MED	5	25	30	26	101	29	35	31	105
		HIGH	5	27	30	29	103	31	35	33	107
48GC**14	208/230-3-60	STD/MED	5	64	80	66	302	68	80	71	306
		HIGH	5	70	80	72	309	73	80	77	313
	460-3-60	STD/MED	5	32	40	32	167	33	45	34	169
		HIGH	5	34	45	35	168	36	45	37	170
	575-3-60	STD/MED	5	24	30	24	131	28	30	29	135
		HIGH	5	26	30	26	132	29	35	31	136

50GC-*07 MCA MOCP Electrical Data

50GC UNIT SIZE	NOM. V-Ph-Hz	IFM TYPE	STD SCCR kA	HIGH SCCR kA[a]	ELECTRIC HEATER			NO CONVENIENCE OUTLET or UNPOWERED CONVENIENCE OUTLET							
								NO POWER EXHAUST				WITH POWER EXHAUST (powered from unit)			
					CRHEATER ****00	NOM (kW)	FLA	MCA	FUSE OR HACR BRKR	DISCONNECT SIZE		MCA	FUSE OR HACR BRKR	DISCONNECT SIZE	
										FLA	LRA			FLA	LRA
50GC-*07	208/230-3-60	MED	5	10	—	—	—	36	45	37	163	39	50	41	167
					410A	—	—	36/36	45/45	37/37	163/163	39/39	50/50	41/41	167/167
					411A	7.8/10.4	21.7/25.0	36/40	45/45	37/37	163/163	40/44	50/50	41/41	167/167
					412A	12.0/16.0	33.4/38.5	50/57	50/60	46/52	163/163	55/61	60/70	50/56	167/167
					413A	15.8/21.0	43.8/50.5	63/72	70/80	58/65	163/163	68/76	70/80	62/70	167/167
					414A	18.8/25.0	52.1/60.1	74/84	80/90	67/76	163/163	78/88	80/90	72/81	167/167
		HIGH	5	10	—	—	—	37	45	38	165	41	50	42	169
					410A	—	—	37/37	45/45	38/38	165/165	41/41	50/50	42/42	169/169
					411A	7.8/10.4	21.7/25.0	37/41	45/45	38/38	165/165	42/46	50/50	42/42	169/169
					412A	12.0/16.0	33.4/38.5	52/58	60/60	47/53	165/165	56/63	60/70	51/57	169/169
					413A	15.8/21.0	43.8/50.5	65/73	70/80	59/67	165/165	69/78	70/80	63/71	169/169
					414A	18.8/25.0	52.1/60.1	75/85	80/90	69/78	165/165	80/90	80/90	73/82	169/169
	460-3-60	MED	5	10	—	—	—	17	20	17	80	19	20	19	82
					418A	6.0	7.2	17	20	17	80	19	20	19	82
					419A	11.5	13.8	21	25	19	80	24	25	21	82
					420A	15.0	18.0	27	30	24	80	29	30	26	82
					421A	25.0	30.1	42	45	38	80	44	45	40	82
		HIGH	5	10	—	—	—	17	20	18	83	19	25	20	85
					418A	6.0	7.2	17	20	18	83	19	25	20	85
					419A	11.5	13.8	22	25	20	83	24	25	22	85
					420A	15.0	18.0	27	30	25	83	30	30	27	85
					421A	25.0	30.1	42	45	39	83	45	45	41	85
	575-3-60	MED	5	—	—	—	—	14	15	14	66	18	20	18	70
					425A	18.0	17.3	25	25	23	66	30	30	27	70
					426A	24.8	23.9	33	35	30	66	38	40	35	70
		HIGH	5	—	—	—	—	14	20	14	67	18	20	19	71
					425A	18.0	17.3	26	30	23	67	31	35	28	71
					426A	24.8	23.9	34	35	31	67	39	40	35	71

NOTE(S):

a. High SCCR (Short Circuit Current Rating) is not available on the following: units with Humidi-MiZer system, Low Ambient controls, Phase loss monitor, HACR Breaker, Non-fused disconnect, and 575V.

50GC-*07 MCA MOCP Electrical Data (cont)

50GC UNIT SIZE	NOM. V-Ph-Hz	IFM TYPE	STD SCCR kA	ELECTRIC HEATER			WITH POWERED CONVENIENCE OUTLET							
							NO POWER EXHAUST				WITH POWER EXHAUST (powered from unit)			
				CRHEATER ****00	NOM (kW)	FLA	MCA	FUSE OR HACR BRKR	DISCONNECT SIZE		MCA	FUSE OR HACR BRKR	DISCONNECT SIZE	
									FLA	LRA			FLA	LRA
50GC-*07	208/230-3-60	STD/ MED	5	—	—	—	40	50	42	168	44	50	46	172
				410A	4.9/6.5	13.6/15.6	40/40	50/50	42/42	168/168	44/44	50/50	46/46	172/172
				411A	7.8/10.4	21.7/25.0	42/46	50/50	42/42	168/168	46/50	50/60	46/46	172/172
				412A	12.0/16.0	33.4/38.5	56/63	60/70	51/57	168/168	61/67	70/70	56/62	172/172
				413A	15.8/21.0	43.8/50.5	69/78	70/80	63/71	168/168	74/82	80/90	68/75	172/172
				414A	18.8/25.0	52.1/60.1	80/90	80/90	73/82	168/168	84/94	90/100	77/86	172/172
		HIGH	5	—	—	—	42	50	43	170	45	50	48	174
				410A	4.9/6.5	13.6/15.6	42/42	50/50	43/43	170/170	45/45	50/50	48/48	174/174
				411A	7.8/10.4	21.7/25.0	43/47	50/50	43/43	170/170	48/52	50/60	48/48	174/174
				412A	12.0/16.0	33.4/38.5	58/64	60/70	53/58	170/170	62/69	70/70	57/63	174/174
				413A	15.8/21.0	43.8/50.5	71/79	80/80	65/72	170/170	75/84	80/90	69/77	174/174
				414A	18.8/25.0	52.1/60.1	81/91	90/100	74/83	170/170	86/96	90/100	78/88	174/174
	460-3-60	STD/ MED	5	—	—	—	19	25	20	82	21	25	22	84
				418A	6.0	7.2	19	25	20	82	21	25	22	84
				419A	11.5	13.8	24	25	22	82	26	30	24	84
				420A	15.0	18.0	29	30	27	82	32	35	29	84
				421A	25.0	30.1	45	45	41	82	47	50	43	84
		HIGH	5	—	—	—	19	25	20	85	21	25	22	87
				418A	6.0	7.2	19	25	20	85	21	25	22	87
				419A	11.5	13.8	25	25	22	85	27	30	24	87
				420A	15.0	18.0	30	30	27	85	32	35	29	87
				421A	25.0	30.1	45	45	41	85	47	50	43	87
	575-3-60	STD/ MED	5	—	—	—	15	20	16	68	19	25	20	72
				425A	18.0	17.3	27	30	25	68	32	35	29	72
				426A	24.8	23.9	36	40	32	68	40	40	37	72
		HIGH	5	—	—	—	16	20	16	69	20	25	21	73
				425A	18.0	17.3	28	30	25	69	33	35	30	73
				426A	24.8	23.9	36	40	33	69	41	45	37	73

50GC-*08 MCA MOCP Electrical Data

50GC UNIT SIZE	NOM. V-Ph-Hz	IFM TYPE	STD SCCR kA	HIGH SCCR kA[a]	ELECTRIC HEATER			NO CONVENIENCE OUTLET or UNPOWERED CONVENIENCE OUTLET							
								NO POWER EXHAUST				WITH POWER EXHAUST (powered from unit)			
					CRHEATER ****00	NOM (kW)	FLA	MCA	FUSE OR HACR BRKR	DISCONNECT SIZE		MCA	FUSE OR HACR BRKR	DISCONNECT SIZE	
										FLA	LRA			FLA	LRA
50GC-*08	208/230-3-60	STD/MED	5	10	—	—	—	39	50	39	198	43	50	44	202
					411A	7.8/10.4	21.7/25.0	39/40	50/50	39/39	198/198	43/44	50/50	44/44	202/202
					412A	12.0/16.0	33.4/38.5	50/57	50/60	46/52	198/198	55/61	60/70	50/56	202/202
					414A	18.8/25.0	52.1/60.1	74/84	80/90	67/76	198/198	78/88	80/90	72/81	202/202
					415A	24.0/32.0	66.7/77.0	92/105	100/110	84/96	198/198	97/109	100/110	88/100	202/202
					416A	31.8/42.4	88.4/102.0	119/136	125/150	109/125	198/198	124/141	125/150	113/129	202/202
		HIGH	5	10	—	—	—	40	50	41	200	44	50	45	204
					411A	7.8/10.4	21.7/25.0	40/41	50/50	41/41	200/200	44/46	50/50	45/45	204/204
					412A	12.0/16.0	33.4/38.5	52/58	60/60	47/53	200/200	56/63	60/70	51/57	204/204
					414A	18.8/25.0	52.1/60.1	75/85	80/90	69/78	200/200	80/90	80/90	73/82	204/204
					415A	24.0/32.0	66.7/77.0	93/106	100/110	85/97	200/200	98/111	100/125	90/102	204/204
					416A	31.8/42.4	88.4/102.0	120/137	125/150	110/126	200/200	125/142	125/150	115/130	204/204
	460-3-60	STD/MED	5	10	—	—	—	20	25	20	98	21	25	22	100
					419A	11.5	13.8	21	25	20	98	24	25	22	100
					420A	15.0	18.0	27	30	24	98	29	30	26	100
					421A	25.0	30.1	42	45	38	98	44	45	40	100
					422A	33.0	39.7	54	60	49	98	56	60	51	100
					423A	41.7	50.2	67	70	61	98	69	70	63	100
		HIGH	5	10	—	—	—	20	25	20	101	22	25	23	103
					419A	11.5	13.8	22	25	20	101	24	25	23	103
					420A	15.0	18.0	27	30	25	101	30	30	27	103
					421A	25.0	30.1	42	45	39	101	45	45	41	103
					422A	33.0	39.7	54	60	50	101	57	60	52	103
					423A	41.7	50.2	68	70	62	101	70	70	64	103
	575-3-60	STD/MED	5	—	—	—	—	14	20	14	85	18	20	19	89
					425A	18.0	17.3	25	25	23	85	30	30	27	89
					427A	36.0	34.6	47	50	43	85	52	60	47	89
		HIGH	5	—	—	—	—	15	20	15	86	19	20	19	90
					425A	18.0	17.3	26	30	23	86	31	35	28	90
					427A	36.0	34.6	47	50	43	86	52	60	48	90

NOTE(S):

a. High SCCR (Short Circuit Current Rating) is not available on the following: units with Humidi-MiZer system, Low Ambient controls, Phase loss monitor, HACR Breaker, Non-fused disconnect, and 575V.

50GC-*08 MCA MOCP Electrical Data (cont)

50GC UNIT SIZE	NOM. V-Ph-Hz	IFM TYPE	STD SCCR kA	ELECTRIC HEATER			WITH POWERED CONVENIENCE OUTLET							
							NO POWER EXHAUST				WITH POWER EXHAUST (powered from unit)			
				CRHEATER ****00	NOM (kW)	FLA	MCA	FUSE OR HACR BRKR	DISCONNECT SIZE		MCA	FUSE OR HACR BRKR	DISCONNECT SIZE	
									FLA	LRA			FLA	LRA
50GC-*08	208/230-3-60	STD/ MED	5	—	—	—	44	50	45	203	47	60	49	207
				411A	7.8/10.4	21.7/25.0	44/46	50/50	45/45	203/203	47/50	60/60	49/49	207/207
				412A	12.0/16.0	33.4/38.5	56/63	60/70	51/57	203/203	61/67	70/70	56/62	207/207
				414A	18.8/25.0	52.1/60.1	80/90	80/90	73/82	203/203	84/94	90/100	77/86	207/207
				415A	24.0/32.0	66.7/77.0	98/111	100/125	90/101	203/203	103/115	110/125	94/106	207/207
				416A	31.8/42.4	88.4/102.0	125/142	125/150	115/130	203/203	130/147	150/150	119/135	207/207
		HIGH	5	—	—	—	45	60	46	205	48	60	51	209
				411A	7.8/10.4	21.7/25.0	45/47	60/60	46/46	205/205	48/52	60/60	51/51	209/209
				412A	12.0/16.0	33.4/38.5	58/64	60/70	53/58	205/205	62/69	70/70	57/63	209/209
				414A	18.8/25.0	52.1/60.1	81/91	90/100	74/83	205/205	86/96	90/100	78/88	209/209
				415A	24.0/32.0	66.7/77.0	99/112	100/125	91/103	205/205	104/117	110/125	95/107	209/209
				416A	31.8/42.4	88.4/102.0	126/143	150/150	116/131	205/205	131/148	150/150	120/136	209/209
	460-3-60	STD/ MED	5	—	—	—	22	25	22	100	24	30	24	102
				419A	11.5	13.8	24	25	22	100	26	30	24	102
				420A	15.0	18.0	29	30	27	100	32	35	29	102
				421A	25.0	30.1	45	45	41	100	47	50	43	102
				422A	33.0	39.7	57	60	52	100	59	60	54	102
				423A	41.7	50.2	70	70	64	100	72	80	66	102
		HIGH	5	—	—	—	22	25	23	103	24	30	25	105
				419A	11.5	13.8	25	25	23	103	27	30	25	105
				420A	15.0	18.0	30	30	27	103	32	35	29	105
				421A	25.0	30.1	45	45	41	103	47	50	43	105
				422A	33.0	39.7	57	60	52	103	59	60	54	105
				423A	41.7	50.2	70	70	64	103	73	80	66	105
	575-3-60	STD/ MED	5	—	—	—	16	20	16	87	20	25	21	91
				425A	18.0	17.3	27	30	25	87	32	35	29	91
				427A	36.0	34.6	49	50	45	87	54	60	49	91
		HIGH	5	—	—	—	17	20	17	88	20	25	21	92
				425A	18.0	17.3	28	30	25	88	33	35	30	92
				427A	36.0	34.6	50	50	45	88	54	60	50	92

50GC-*09 MCA MOCP Electrical Data

50GC UNIT SIZE	NOM. V-Ph-Hz	IFM TYPE	STD SCCR kA	HIGH SCCR kA[a]	ELECTRIC HEATER			NO CONVENIENCE OUTLET or UNPOWERED CONVENIENCE OUTLET							
								NO POWER EXHAUST				WITH POWER EXHAUST (powered from unit)			
					CRHEATER ****00	NOM (kW)	FLA	MCA	FUSE OR HACR BRKR	DISCONNECT SIZE		MCA	FUSE OR HACR BRKR	DISCONNECT SIZE	
										FLA	LRA			FLA	LRA
50GC-*09	208/230-3-60	STD/MED	5	10	—	—	—	43	50	45	215	47	60	49	219
					411A	7.8/10.4	21.7/25.0	43/43	50/50	45/45	215/215	47/47	60/60	49/49	219/219
					412A	12.0/16.0	33.4/38.5	50/57	50/60	46/52	215/215	55/61	60/70	50/56	219/219
					414A	18.8/25.0	52.1/60.1	74/84	80/90	67/76	215/215	78/88	80/90	72/81	219/219
					415A	24.0/32.0	66.7/77.0	92/105	100/110	84/96	215/215	97/109	100/110	88/100	219/219
					416A	31.8/42.4	88.4/102.0	119/136	125/150	109/125	215/215	124/141	125/150	113/129	219/219
		HIGH	5	10	—	—	—	44	50	46	217	48	60	50	221
					411A	7.8/10.4	21.7/25.0	44/44	50/50	46/46	217/217	48/48	60/60	50/50	221/221
					412A	12.0/16.0	33.4/38.5	52/58	60/60	47/53	217/217	56/63	60/70	51/57	221/221
					414A	18.8/25.0	52.1/60.1	75/85	80/90	69/78	217/217	80/90	80/90	73/82	221/221
					415A	24.0/32.0	66.7/77.0	93/106	100/110	85/97	217/217	98/111	100/125	90/102	221/221
					416A	31.8/42.4	88.4/102.0	120/137	125/150	110/126	217/217	125/142	125/150	115/130	221/221
	460-3-60	STD/MED	5	10	—	—	—	20	25	20	104	22	25	22	106
					419A	11.5	13.8	21	25	20	104	24	25	22	106
					420A	15.0	18.0	27	30	24	104	29	30	26	106
					421A	25.0	30.1	42	45	38	104	44	45	40	106
					422A	33.0	39.7	54	60	49	104	56	60	51	106
					423A	41.7	50.2	67	70	61	104	69	70	63	106
		HIGH	5	10	—	—	—	20	25	21	107	22	25	23	109
					419A	11.5	13.8	22	25	21	107	24	25	23	109
					420A	15.0	18.0	27	30	25	107	30	30	27	109
					421A	25.0	30.1	42	45	39	107	45	45	41	109
					422A	33.0	39.7	54	60	50	107	57	60	52	109
					423A	41.7	50.2	68	70	62	107	70	70	64	109
	575-3-60	STD/MED	5	—	—	—	—	15	20	16	82	19	25	20	86
					425A	18.0	17.3	25	25	23	82	30	30	27	86
					427A	36.0	34.6	47	50	43	82	52	60	47	86
		HIGH	5	—	—	—	—	16	20	16	83	20	25	21	87
					425A	18.0	17.3	26	30	23	83	31	35	28	87
					427A	36.0	34.6	47	50	43	83	52	60	48	87

NOTE(S):

a. High SCCR (Short Circuit Current Rating) is not available on the following: units with Humidi-MiZer system, Low Ambient controls, Phase loss monitor, HACR Breaker, Non-fused disconnect, and 575V.

50GC-*09 MCA MOCP Electrical Data (cont)

50GC UNIT SIZE	NOM. V-Ph-Hz	IFM TYPE	STD SCCR kA	ELECTRIC HEATER			WITH POWERED CONVENIENCE OUTLET							
							NO POWER EXHAUST				WITH POWER EXHAUST (powered from unit)			
				CRHEATER ****00	NOM (kW)	FLA	MCA	FUSE OR HACR BRKR	DISCONNECT SIZE		MCA	FUSE OR HACR BRKR	DISCONNECT SIZE	
									FLA	LRA			FLA	LRA
50GC-*09	208/230-3-60	STD/ MED	5	—	—	—	48	60	50	220	52	60	55	224
				411A	7.8/10.4	21.7/25.0	48/48	60/60	50/50	220/220	52/52	60/60	55/55	224/224
				412A	12.0/16.0	33.4/38.5	56/63	60/70	51/57	220/220	61/67	70/70	56/62	224/224
				414A	18.8/25.0	52.1/60.1	80/90	80/90	73/82	220/220	84/94	90/100	77/86	224/224
				415A	24.0/32.0	66.7/77.0	98/111	100/125	90/101	220/220	103/115	110/125	94/106	224/224
				416A	31.8/42.4	88.4/102.0	125/142	125/150	115/130	220/220	130/147	150/150	119/135	224/224
		HIGH	5	—	—	—	49	60	51	222	53	60	56	226
				411A	7.8/10.4	21.7/25.0	49/49	60/60	51/51	222/222	53/53	60/60	56/56	226/226
				412A	12.0/16.0	33.4/38.5	58/64	60/70	53/58	222/222	62/69	70/70	57/63	226/226
				414A	18.8/25.0	52.1/60.1	81/91	90/100	74/83	222/222	86/96	90/100	78/88	226/226
				415A	24.0/32.0	66.7/77.0	99/112	100/125	91/103	222/222	104/117	110/125	95/107	226/226
				416A	31.8/42.4	88.4/102.0	126/143	150/150	116/131	222/222	131/148	150/150	120/136	226/226
	460-3-60	STD/ MED	5	—	—	—	22	25	23	106	24	30	25	108
				419A	11.5	13.8	24	25	23	106	26	30	25	108
				420A	15.0	18.0	29	30	27	106	32	35	29	108
				421A	25.0	30.1	45	45	41	106	47	50	43	108
				422A	33.0	39.7	57	60	52	106	59	60	54	108
				423A	41.7	50.2	70	70	64	106	72	80	66	108
		HIGH	5	—	—	—	23	25	23	109	24	30	26	111
				419A	11.5	13.8	25	25	23	109	27	30	26	111
				420A	15.0	18.0	30	30	27	109	32	35	29	111
				421A	25.0	30.1	45	45	41	109	47	50	43	111
				422A	33.0	39.7	57	60	52	109	59	60	54	111
				423A	41.7	50.2	70	70	64	109	73	80	66	111
	575-3-60	STD/ MED	5	—	—	—	17	20	18	84	21	25	22	88
				425A	18.0	17.3	27	30	25	84	32	35	29	88
				427A	36.0	34.6	49	50	45	84	54	60	49	88
		HIGH	5	—	—	—	18	20	18	85	21	25	23	89
				425A	18.0	17.3	28	30	25	85	33	35	30	89
				427A	36.0	34.6	50	50	45	85	54	60	50	89

50GC-*12 MCA MOCP Electrical Data

50GC UNIT SIZE	NOM. V-Ph-Hz	IFM TYPE	STD SCCR kA[a]	ELECTRIC HEATER			NO CONVENIENCE OUTLET or UNPOWERED CONVENIENCE OUTLET							
							NO POWER EXHAUST				WITH POWER EXHAUST (powered from unit)			
									DISCONNECT SIZE				DISCONNECT SIZE	
				CRHEATER ****00	NOM (kW)	FLA	MCA	FUSE OR HACR BRKR	FLA	LRA	MCA	FUSE OR HACR BRKR	FLA	LRA
50GC-*12	208/230-3-60	STD/MED	5	—	—	—	52	60	54	235	56	70	59	239
				411A	7.8/10.4	21.7/25.0	52/52	60/60	54/54	235/235	56/56	70/70	59/59	239/239
				412A	12.0/16.0	33.4/38.5	52/57	60/60	54/54	235/235	56/61	70/70	59/59	239/239
				415A	24.0/32.0	66.7/77.0	92/105	100/110	84/96	235/235	97/109	100/110	88/100	239/239
				416A	31.8/42.4	88.4/102.0	119/136	125/150	109/125	235/235	124/141	125/150	113/129	239/239
				417A	37.6/50.0	104.2/120.3	139/129	150/150	127/146	235/235	143/134	150/150	132/150	239/239
		HIGH	5	—	—	—	59	70	61	244	62	80	66	248
				411A	7.8/10.4	21.7/25.0	59/59	70/70	61/61	244/244	62/62	80/80	66/66	248/248
				412A	12.0/16.0	33.4/38.5	59/64	70/70	61/61	244/244	63/69	80/80	66/66	248/248
				415A	24.0/32.0	66.7/77.0	100/112	100/125	91/103	244/244	104/117	110/125	96/107	248/248
				416A	31.8/42.4	88.4/102.0	127/144	150/150	116/132	244/244	131/148	150/150	121/136	248/248
				417A	37.6/50.0	104.2/120.3	146/137	150/150	134/153	244/244	151/141	175/175	139/157	248/248
	460-3-60	STD/MED	5	—	—	—	27	30	29	118	29	35	31	120
				420A	15.0	18.0	27	30	29	118	29	35	31	120
				422A	33.0	39.7	54	60	49	118	56	60	51	120
				423A	41.7	50.2	67	70	61	118	69	70	63	120
				424A	50.0	60.1	64	70	73	118	67	70	75	120
		HIGH	5	—	—	—	30	35	32	122	32	35	34	124
				420A	15.0	18.0	30	35	32	122	32	35	34	124
				422A	33.0	39.7	57	60	52	122	59	60	54	124
				423A	41.7	50.2	70	70	64	122	72	80	66	124
				424A	50.0	60.1	68	80	76	122	70	80	78	124
	575-3-60	STD/MED	5	—	—	—	24	30	24	99	27	30	29	103
				425A	18.0	17.3	25	30	24	99	30	30	29	103
				427A	36.0	34.6	47	50	43	99	52	60	47	103
				428A	50.0	48.1	52	60	58	99	56	60	63	103
		HIGH	5	—	—	—	26	30	27	101	30	35	31	105
				425A	18.0	17.3	28	30	27	101	33	35	31	105
				427A	36.0	34.6	49	50	45	101	54	60	49	105
				428A	50.0	48.1	54	60	61	101	59	60	65	105

NOTE(S):

a. High SCCR is not available on size 12 units due to control box constraints.

50GC-*12 MCA MOCP Electrical Data (cont)

50GC UNIT SIZE	NOM. V-Ph-Hz	IFM TYPE	STD SCCR kA	ELECTRIC HEATER			WITH POWERED CONVENIENCE OUTLET							
							NO POWER EXHAUST				WITH POWER EXHAUST (powered from unit)			
				CRHEATER ****00	NOM (kW)	FLA	MCA	FUSE OR HACR BRKR	DISCONNECT SIZE		MCA	FUSE OR HACR BRKR	DISCONNECT SIZE	
									FLA	LRA			FLA	LRA
50GC-*12	208/230-3-60	STD/ MED	5	—	—	—	57	70	60	240	61	80	64	244
				411A	7.8/10.4	21.7/25.0	57/57	70/70	60/60	240/240	61/61	80/80	64/64	244/244
				412A	12.0/16.0	33.4/38.5	57/63	70/70	60/60	240/240	61/67	80/80	64/64	244/244
				415A	24.0/32.0	66.7/77.0	98/111	100/125	90/101	240/240	103/115	110/125	94/106	244/244
				416A	31.8/42.4	88.4/102.0	125/142	125/150	115/130	240/240	130/147	150/150	119/135	244/244
				417A	37.6/50.0	104.2/120.3	145/135	150/150	133/151	240/240	149/140	150/150	137/156	244/244
		HIGH	5	—	—	—	63	80	67	249	67	80	71	253
				411A	7.8/10.4	21.7/25.0	63/63	80/80	67/67	249/249	67/67	80/80	71/71	253/253
				412A	12.0/16.0	33.4/38.5	64/70	80/80	67/67	249/249	69/75	80/80	71/71	253/253
				415A	24.0/32.0	66.7/77.0	106/118	110/125	97/109	249/249	110/123	110/125	101/113	253/253
				416A	31.8/42.4	88.4/102.0	133/150	150/150	122/137	249/249	137/154	150/175	126/142	253/253
				417A	37.6/50.0	104.2/120.3	152/143	175/175	140/158	249/249	157/147	175/175	144/163	253/253
	460-3-60	STD/ MED	5	—	—	—	30	35	31	120	31	35	33	122
				420A	15.0	18.0	30	35	31	120	32	35	33	122
				422A	33.0	39.7	57	60	52	120	59	60	54	122
				423A	41.7	50.2	70	70	64	120	72	80	66	122
				424A	50.0	60.1	67	70	75	120	69	80	77	122
		HIGH	5	—	—	—	32	35	34	124	34	40	36	126
				420A	15.0	18.0	33	35	34	124	35	40	36	126
				422A	33.0	39.7	60	60	55	124	62	70	57	126
				423A	41.7	50.2	73	80	67	124	75	80	69	126
				424A	50.0	60.1	70	80	78	124	73	80	80	126
	575-3-60	STD/ MED	5	—	—	—	25	30	26	101	29	35	31	105
				425A	18.0	17.3	27	30	26	101	32	35	31	105
				427A	36.0	34.6	49	50	45	101	54	60	49	105
				428A	50.0	48.1	54	60	60	101	59	60	65	105
		HIGH	5	—	—	—	27	30	29	103	31	35	33	107
				425A	18.0	17.3	30	30	29	103	35	35	33	107
				427A	36.0	34.6	52	60	47	103	56	60	51	107
				428A	50.0	48.1	56	60	63	103	61	70	67	107

50GC-*14 MCA MOCP Electrical Data

50GC UNIT SIZE	NOM. V-Ph-Hz	IFM TYPE	STD SCCR kA	HIGH SCCR kA[a]	ELECTRIC HEATER			NO CONVENIENCE OUTLET or UNPOWERED CONVENIENCE OUTLET							
								NO POWER EXHAUST				WITH POWER EXHAUST (powered from unit)			
					CRHEATER ****00	NOM (kW)	FLA	MCA	FUSE OR HACR BRKR	DISCONNECT SIZE		MCA	FUSE OR HACR BRKR	DISCONNECT SIZE	
										FLA	LRA			FLA	LRA
50GC-*14	208/230-3-60	STD/MED	5	10	—	—	—	60	80	61	297	63	80	65	301
					412A	12.0/16.0	33.4/38.5	60/60	80/80	61/61	297/297	63/63	80/80	65/65	301/301
					414A	18.8/25.0	52.1/60.1	75/85	80/90	69/78	297/297	80/90	80/90	73/82	301/301
					415A	24.0/32.0	66.7/77.0	93/106	100/110	85/97	297/297	98/111	100/125	90/102	301/301
					416A	31.8/42.4	88.4/102.0	120/137	125/150	110/126	297/297	125/142	125/150	115/130	301/301
					417A	37.6/50.0	104.2/120.3	140/130	150/150	128/147	297/297	145/135	150/150	133/151	301/301
		HIGH	5	10	—	—	—	65	80	67	304	69	80	71	308
					412A	12.0/16.0	33.4/38.5	65/65	80/80	67/67	304/304	69/69	80/80	71/71	308/308
					414A	18.8/25.0	52.1/60.1	81/91	90/100	74/84	304/304	86/96	90/100	79/88	308/308
					415A	24.0/32.0	66.7/77.0	100/112	100/125	91/103	304/304	104/117	110/125	96/107	308/308
					416A	31.8/42.4	88.4/102.0	127/144	150/150	116/132	304/304	131/148	150/150	121/136	308/308
					417A	37.6/50.0	104.2/120.3	146/137	150/150	134/153	304/304	151/141	175/175	139/157	308/308
	460-3-60	STD/MED	5	10	—	—	—	29	40	30	165	31	40	32	167
					420A	15.0	18.0	29	40	30	165	31	40	32	167
					421A	25.0	30.1	42	45	39	165	45	45	41	167
					422A	33.0	39.7	54	60	50	165	57	60	52	167
					423A	41.7	50.2	68	70	62	165	70	70	64	167
					424A	50.0	60.1	65	70	73	165	67	70	75	167
		HIGH	5	10	—	—	—	32	40	32	166	33	45	34	168
					420A	15.0	18.0	32	40	32	166	33	45	34	168
					421A	25.0	30.1	45	45	41	166	47	50	43	168
					422A	33.0	39.7	57	60	52	166	59	60	54	168
					423A	41.7	50.2	70	70	64	166	72	80	66	168
					424A	50.0	60.1	68	80	76	166	70	80	78	168
	575-3-60	STD/MED	5	—	—	—	—	22	30	22	129	26	30	27	133
					425A	18.0	17.3	26	30	23	129	31	35	28	133
					426A	24.8	23.9	34	35	31	129	39	40	35	133
					427A	36.0	34.6	47	50	43	129	52	60	48	133
					428A	50.0	48.1	52	60	59	129	57	60	63	133
		HIGH	5	—	—	—	—	24	30	24	130	28	30	29	134
					425A	18.0	17.3	28	30	25	130	33	35	30	134
					426A	24.8	23.9	36	40	33	130	41	45	37	134
					427A	36.0	34.6	49	50	45	130	54	60	49	134
					428A	50.0	48.1	54	60	61	130	59	60	65	134

NOTE(S):

a. High SCCR (Short Circuit Current Rating) is not available on the following: units with Humidi-MiZer system, Low Ambient controls, Phase loss monitor, HACR Breaker, Non-fused disconnect, and 575V.

50GC-*14 MCA MOCP Electrical Data (cont)

50GC UNIT SIZE	NOM. V-Ph-Hz	IFM TYPE	STD SCCR kA	ELECTRIC HEATER			WITH POWERED CONVENIENCE OUTLET							
							NO POWER EXHAUST				WITH POWER EXHAUST (powered from unit)			
				CRHEATER ****00	NOM (kW)	FLA	MCA	FUSE OR HACR BRKR	DISCONNECT SIZE		MCA	FUSE OR HACR BRKR	DISCONNECT SIZE	
									FLA	LRA			FLA	LRA
50GC-*14	208/230-3-60	STD/ MED	5	—	—	—	64	80	66	302	68	80	71	306
				412A	12.0/16.0	33.4/38.5	64/64	80/80	66/66	302/302	68/69	80/80	71/71	306/306
				414A	18.8/25.0	52.1/60.1	81/91	90/100	74/83	302/302	86/96	90/100	78/88	306/306
				415A	24.0/32.0	66.7/77.0	99/112	100/125	91/103	302/302	104/117	110/125	95/107	306/306
				416A	31.8/42.4	88.4/102.0	126/143	150/150	116/131	302/302	131/148	150/150	120/136	306/306
				417A	37.6/50.0	104.2/120.3	146/136	150/150	134/152	302/302	151/141	175/150	138/157	306/306
		HIGH	5	—	—	—	70	80	72	309	73	80	77	313
				412A	12.0/16.0	33.4/38.5	70/70	80/80	72/72	309/309	73/75	80/80	77/77	313/313
				414A	18.8/25.0	52.1/60.1	87/97	90/100	80/89	309/309	92/102	100/110	84/93	313/313
				415A	24.0/32.0	66.7/77.0	106/118	110/125	97/109	309/309	110/123	110/125	101/113	313/313
				416A	31.8/42.4	88.4/102.0	133/150	150/150	122/137	309/309	137/154	150/175	126/142	313/313
				417A	37.6/50.0	104.2/120.3	152/143	175/175	140/158	309/309	157/147	175/175	144/163	313/313
	460-3-60	STD/ MED	5	—	—	—	32	40	32	167	33	45	34	169
				420A	15.0	18.0	32	40	32	167	33	45	34	169
				421A	25.0	30.1	45	45	41	167	47	50	43	169
				422A	33.0	39.7	57	60	52	167	59	60	54	169
				423A	41.7	50.2	70	70	64	167	73	80	66	169
				424A	50.0	60.1	68	80	76	167	70	80	78	169
		HIGH	5	—	—	—	34	45	35	168	36	45	37	170
				420A	15.0	18.0	34	45	35	168	36	45	37	170
				421A	25.0	30.1	48	50	44	168	50	50	46	170
				422A	33.0	39.7	60	60	55	168	62	70	57	170
				423A	41.7	50.2	73	80	67	168	75	80	69	170
				424A	50.0	60.1	70	80	78	168	73	80	80	170
	575-3-60	STD/ MED	5	—	—	—	24	30	24	131	28	30	29	135
				425A	18.0	17.3	28	30	25	131	33	35	30	135
				426A	24.8	23.9	36	40	33	131	41	45	37	135
				427A	36.0	34.6	50	50	45	131	54	60	50	135
				428A	50.0	48.1	54	60	61	131	59	60	65	135
		HIGH	5	—	—	—	26	30	26	132	29	35	31	136
				425A	18.0	17.3	30	30	27	132	35	35	32	136
				426A	24.8	23.9	38	40	35	132	43	45	39	136
				427A	36.0	34.6	52	60	47	132	56	60	51	136
				428A	50.0	48.1	56	60	63	132	61	70	67	136

50GC-*07 Electric Heat Data — Without Non-fused Disconnect

50GC UNIT SIZE	NOM. V-Ph-Hz	IFM TYPE	ELECTRIC HEATER PART NUMBER	NOM (kW)	STD SCCR kA	HIGH SCCR kA[a]	APPLICATION (kW)	APPLICATION OUTPUT (MBH)	SINGLE POINT OR JUNCTION KIT PART NUMBER CRSINGLEXXXA00			
									NO C.O. OR UNPOWERED C.O.		WITH PWRD C.O.	
									NO P.E.	WITH P.E. (pwrd fr/unit)	NO P.E	WITH P.E. (pwrd fr/unit)
50GC-*07	208/230-3-60	STD/MED	CRHEATER410A00	6.5	5	10	4.9/6.0	16.7/20.4	042	042	042	042
			CRHEATER411A00	10.4	5	10	7.8/9.6	26.7/32.6	042	042	042	042
			CRHEATER412A00	16.0	5	10	12.0/14.7	41.0/50.1	042	043	043	043
			CRHEATER413A00	21.0	5	10	15.8/19.3	53.8/65.8	043	043	043	043
			CRHEATER414A00	25.0	5	10	18.8/23.0	64.1/78.3	043	043	043	043
		HIGH	CRHEATER410A00	6.5	5	10	4.9/6.0	16.7/20.4	042	042	042	042
			CRHEATER411A00	10.4	5	10	7.8/9.6	26.7/32.6	042	042	042	042
			CRHEATER412A00	16.0	5	10	12.0/14.7	41.0/50.1	042	043	043	043
			CRHEATER413A00	21.0	5	10	15.8/19.3	53.8/65.8	043	043	043	043
			CRHEATER414A00	25.0	5	10	18.8/23.0	64.1/78.3	043	043	043	043
	460-3-60	STD/MED	CRHEATER418A00	6.0	5	10	5.5	18.8	042	042	042	042
			CRHEATER419A00	11.5	5	10	10.6	36.0	042	042	042	042
			CRHEATER420A00	15.0	5	10	13.8	47.0	042	042	042	042
			CRHEATER421A00	25.0	5	10	23.0	78.3	042	042	042	042
		HIGH	CRHEATER418A00	6.0	5	10	5.5	18.8	042	042	042	042
			CRHEATER419A00	11.5	5	10	10.6	36.0	042	042	042	042
			CRHEATER420A00	15.0	5	10	13.8	47.0	042	042	042	042
			CRHEATER421A00	25.0	5	10	23.0	78.3	042	042	042	042
	575-3-60	STD/MED	CRHEATER425A00	18.0	5	—	16.5	56.4	042	042	042	042
			CRHEATER426A00	24.8	5	—	22.8	77.7	042	042	042	042
		HIGH	CRHEATER425A00	18.0	5	—	16.5	56.4	042	042	042	042
			CRHEATER426A00	24.8	5	—	22.8	77.7	042	042	042	042

NOTE(S):

a. High SCCR (Short Circuit Current Rating) is not available on the following: units with Humidi-MiZer system, Low Ambient controls, Phase loss monitor, HACR Breaker, Non-fused disconnect, and 575V.

50GC-*07 Electric Heat Data — Without Non-fused Disconnect (cont)

50GC UNIT SIZE	NOM. V-Ph-Hz	IFM TYPE	ELECTRIC HEATER PART NUMBER	NOM (kW)	STD SCCR kA	HIGH SCCR kA[a]	APPLICATION (kW)	APPLICATION OUTPUT (MBH)	HSCCR SINGLE POINT OR JUNCTION KIT PART NUMBER CRSINGLEXXXA00			
									NO C.O. OR UNPOWERED C.O.		WITH PWRD C.O.	
									NO P.E.	WITH P.E. (pwrd fr/unit)	NO P.E	WITH P.E. (pwrd fr/unit)
50GC-*07	208/230-3-60	STD/ MED	CRHEATER410A00	6.5	5	10	4.9/6.0	16.7/20.4	064	064	064	064
			CRHEATER411A00	10.4	5	10	7.8/9.6	26.7/32.6	064	064	064	064
			CRHEATER412A00	16.0	5	10	12.0/14.7	41.0/50.1	064	064	064	064
			CRHEATER413A00	21.0	5	10	15.8/19.3	53.8/65.8	065	065	065	065
			CRHEATER414A00	25.0	5	10	18.8/23.0	64.1/78.3	065	065	065	065
		HIGH	CRHEATER410A00	6.5	5	10	4.9/6.0	16.7/20.4	064	064	064	064
			CRHEATER411A00	10.4	5	10	7.8/9.6	26.7/32.6	064	064	064	064
			CRHEATER412A00	16.0	5	10	12.0/14.7	41.0/50.1	064	064	064	064
			CRHEATER413A00	21.0	5	10	15.8/19.3	53.8/65.8	065	065	065	065
			CRHEATER414A00	25.0	5	10	18.8/23.0	64.1/78.3	065	065	065	065
	460-3-60	STD/ MED	CRHEATER418A00	6.0	5	10	5.5	18.8	064	064	064	064
			CRHEATER419A00	11.5	5	10	10.6	36.0	064	064	064	064
			CRHEATER420A00	15.0	5	10	13.8	47.0	064	064	064	064
			CRHEATER421A00	25.0	5	10	23.0	78.3	065	065	065	065
		HIGH	CRHEATER418A00	6.0	5	10	5.5	18.8	064	064	064	064
			CRHEATER419A00	11.5	5	10	10.6	36.0	064	064	064	064
			CRHEATER420A00	15.0	5	10	13.8	47.0	064	064	064	064
			CRHEATER421A00	25.0.	5	10	23.0	78.3	065	065	065	065
	575-3-60	STD/ MED	CRHEATER425A00	18.0	5	—	16.5	56.4	064	064	064	064
			CRHEATER426A00	24.8	5	—	22.8	77.7	065	065	065	065
		HIGH	CRHEATER425A00	18.0	5	—	16.5	56.4	064	064	064	064
			CRHEATER426A00	24.8	5	—	22.8	77.7	065	065	065	065

NOTE(S):

a. High SCCR (Short Circuit Current Rating) is not available on the following: units with Humidi-MiZer system, Low Ambient controls, Phase loss monitor, HACR Breaker, Non-fused disconnect, and 575V.

50GC-*07 Electric Heat Data — With Non-fused Disconnect

50GC UNIT SIZE	NOM. V-Ph-Hz	IFM TYPE	ELECTRIC HEATER PART NUMBER	NOM (kW)	STD SCCR kA	APPLICATION (kW)	APPLICATION OUTPUT (MBH)	SINGLE POINT OR JUNCTION KIT PART NUMBER CRSINGLEXXXA00			
								NO C.O. OR UNPOWERED C.O.		WITH PWRD C.O.	
								NO P.E.	WITH P.E. (pwrd fr/unit)	NO P.E	WITH P.E. (pwrd fr/unit)
50GC-*07	208/230-3-60	STD/ MED	CRHEATER410A00	6.5	5	4.9/6.0	16.7/20.4	042	042	042	042
			CRHEATER411A00	10.4	5	7.8/9.6	26.7/32.6	042	042	042	042
			CRHEATER412A00	16.0	5	12.0/14.7	41.0/50.1	042	043	043	043
			CRHEATER413A00	21.0	5	15.8/19.3	53.8/65.8	043	043	043	043
			CRHEATER414A00	25.0	5	18.8/23.0	64.1/78.3	043	043	043	043
		HIGH	CRHEATER410A00	6.5	5	4.9/6.0	16.7/20.4	042	042	042	042
			CRHEATER411A00	10.4	5	7.8/9.6	26.7/32.6	042	042	042	042
			CRHEATER412A00	16.0	5	12.0/14.7	41.0/50.1	042	043	043	043
			CRHEATER413A00	21.0	5	15.8/19.3	53.8/65.8	043	043	043	043
			CRHEATER414A00	25.0	5	18.8/23.0	64.1/78.3	043	043	043	043
	460-3-60	STD/ MED	CRHEATER418A00	6.0	5	5.5	18.8	042	042	042	042
			CRHEATER419A00	11.5	5	10.6	36.0	042	042	042	042
			CRHEATER420A00	15.0	5	13.8	47.0	042	042	042	042
			CRHEATER421A00	25.0	5	23.0	78.3	042	042	042	042
		HIGH	CRHEATER418A00	6.0	5	5.5	18.8	042	042	042	042
			CRHEATER419A00	11.5	5	10.6	36.0	042	042	042	042
			CRHEATER420A00	15.0	5	13.8	47.0	042	042	042	042
			CRHEATER421A00	25.0	5	23.0	78.3	042	042	042	042
	575-3-60	STD/ MED	CRHEATER425A00	18.0	5	16.5	56.4	042	042	042	042
			CRHEATER426A00	24.8	5	22.8	77.7	042	042	042	042
		HIGH	CRHEATER425A00	18.0	5	16.5	56.4	042	042	042	042
			CRHEATER426A00	24.8	5	22.8	77.7	042	042	042	042

50GC-*08 Electric Heat Data — Without Non-fused Disconnect

50GC UNIT SIZE	NOM. V-Ph-Hz	IFM TYPE	ELECTRIC HEATER PART NUMBER	NOM (kW)	STD SCCR kA	HIGH SCCR kA[a]	APPLICATION (kW)	APPLICATION OUTPUT (MBH)	SINGLE POINT OR JUNCTION KIT PART NUMBER CRSINGLEXXXA00			
									NO C.O. OR UNPOWERED C.O.		WITH PWRD C.O.	
									NO P.E.	WITH P.E. (pwrd fr/unit)	NO P.E	WITH P.E. (pwrd fr/unit)
50GC-*08	208/230-3-60	STD/ MED	CRHEATER411A00	10.4	5	10	7.8/9.6	26.7/32.6	047	047	047	047
			CRHEATER412A00	16.0	5	10	12.0/14.7	41.0/50.1	047	049	049	049
			CRHEATER414A00	25.0	5	10	18.8/23.0	64.1/78.3	049	049	049	049
			CRHEATER415A00	32.0	5	10	24.0/29.4	82.0/100.3	049	049	049	049
			CRHEATER416A00	42.4	5	10	31.8/38.9	108.7/132.9	051	051	051	051
		HIGH	CRHEATER411A00	10.4	5	10	7.8/9.6	26.7/32.6	047	047	047	047
			CRHEATER412A00	16.0	5	10	12.0/14.7	41.0/50.1	047	049	049	049
			CRHEATER414A00	25.0	5	10	18.8/23.0	64.1/78.3	049	049	049	049
			CRHEATER415A00	32.0	5	10	24.0/29.4	82.0/100.3	049	049	049	049
			CRHEATER416A00	42.4	5	10	31.8/38.9	108.7/132.9	051	051	051	051
	460-3-60	STD/ MED	CRHEATER419A00	11.5	5	10	10.6	36.0	047	047	047	047
			CRHEATER420A00	15.0	5	10	13.8	47.0	047	047	047	047
			CRHEATER421A00	25.0	5	10	23.0	78.3	047	047	047	047
			CRHEATER422A00	33.0	5	10	30.3	103.4	047	047	047	047
			CRHEATER423A00	41.7	5	10	38.3	130.7	050	050	050	050
		HIGH	CRHEATER419A00	11.5	5	10	10.6	36.0	047	047	047	047
			CRHEATER420A00	15.0	5	10	13.8	47.0	047	047	047	047
			CRHEATER421A00	25.0	5	10	23.0	78.3	047	047	047	047
			CRHEATER422A00	33.0	5	10	30.3	103.4	047	047	047	047
			CRHEATER423A00	41.7	5	10	38.3	130.7	050	050	050	050
	575-3-60	STD/ MED	CRHEATER425A00	18.0	5	—	16.5	56.4	047	047	047	047
			CRHEATER427A00	36.0	5	—	33.1	112.8	047	047	047	047
		HIGH	CRHEATER425A00	18.0	5	—	16.5	56.4	047	047	047	047
			CRHEATER427A00	36.0	5	—	33.1	112.8	047	047	047	047

NOTE(S):

a. High SCCR (Short Circuit Current Rating) is not available on the following: units with Humidi-MiZer system, Low Ambient controls, Phase loss monitor, HACR Breaker, Non-fused disconnect, and 575V.

50GC-*08 Electric Heat Data — Without Non-fused Disconnect (cont)

50GC UNIT SIZE	NOM. V-Ph-Hz	IFM TYPE	ELECTRIC HEATER PART NUMBER	NOM (kW)	STD SCCR kA	HIGH SCCR kA[a]	APPLICATION (kW)	APPLICATION OUTPUT (MBH)	HSCCR SINGLE POINT OR JUNCTION KIT PART NUMBER CRSINGLEXXXA00			
									NO C.O. OR UNPOWERED C.O.		WITH PWRD C.O.	
									NO P.E.	WITH P.E. (pwrd fr/unit)	NO P.E	WITH P.E. (pwrd fr/unit)
50GC-*08	208/230-3-60	STD/ MED	CRHEATER411A00	10.4	5	10	7.8/9.6	26.7/32.6	067	067	067	067
			CRHEATER412A00	16.0	5	10	12.0/14.7	41.0/50.1	067	067	067	067
			CRHEATER414A00	25.0	5	10	18.8/23.0	64.1/78.3	068	068	068	068
			CRHEATER415A00	32.0	5	10	24.0/29.4	82.0/100.3	068	068	068	068
			CRHEATER416A00	42.4	5	10	31.8/38.9	108.7/132.9	069	069	069	069
		HIGH	CRHEATER411A00	10.4	5	10	7.8/9.6	26.7/32.6	067	067	067	067
			CRHEATER412A00	16.0	5	10	12.0/14.7	41.0/50.1	067	067	067	067
			CRHEATER414A00	25.0	5	10	18.8/23.0	64.1/78.3	068	068	068	068
			CRHEATER415A00	32.0	5	10	24.0/29.4	82.0/100.3	068	068	068	068
			CRHEATER416A00	42.4	5	10	31.8/38.9	108.7/132.9	069	069	069	069
	460-3-60	STD/ MED	CRHEATER419A00	11.5	5	10	10.6	36.0	067	067	067	067
			CRHEATER420A00	15.0	5	10	13.8	47.0	067	067	067	067
			CRHEATER421A00	25.0	5	10	23.0	78.3	068	068	068	068
			CRHEATER422A00	33.0	5	10	30.3	103.4	068	068	068	068
			CRHEATER423A00	41.7	5	10	38.3	130.7	068	068	068	068
		HIGH	CRHEATER419A00	11.5	5	10	10.6	36.0	067	067	067	067
			CRHEATER420A00	15.0	5	10	13.8	47.0	067	067	067	067
			CRHEATER421A00	25.0	5	10	23.0	78.3	068	068	068	068
			CRHEATER422A00	33.0.	5	10	30.3	103.4	068	068	068	068
			CRHEATER423A00	41.7	5	10	38.3	130.7	068	068	068	068
	575-3-60	STD/ MED	CRHEATER425A00	18.0	5	—	16.5	56.4	067	067	067	067
			CRHEATER427A00	36.0	5	—	33.1	112.8	068	068	068	068
		HIGH	CRHEATER425A00	18.0	5	—	16.5	56.4	067	067	067	067
			CRHEATER427A00	36.0	5	—	33.1	112.8	068	068	068	068

NOTE(S):

a. High SCCR (Short Circuit Current Rating) is not available on the following: units with Humidi-MiZer system, Low Ambient controls, Phase loss monitor, HACR Breaker, Non-fused disconnect, and 575V.

50GC-*08 Electric Heat Data — With Non-fused Disconnect

50GC UNIT SIZE	NOM. V-Ph-Hz	IFM TYPE	ELECTRIC HEATER PART NUMBER	NOM (kW)	STD SCCR kA	APPLICATION (kW)	APPLICATION OUTPUT (MBH)	SINGLE POINT OR JUNCTION KIT PART NUMBER CRSINGLEXXXA00			
								NO C.O. OR UNPOWERED C.O.		WITH PWRD C.O.	
								NO P.E.	WITH P.E. (pwrd fr/unit)	NO P.E	WITH P.E. (pwrd fr/unit)
50GC-*08	208/230-3-60	STD/ MED	CRHEATER411A00	10.4	5	7.8/9.6	26.7/32.6	047	047	047	047
			CRHEATER412A00	16.0	5	12.0/14.7	41.0/50.1	047	049	049	049
			CRHEATER414A00	25.0	5	18.8/23.0	64.1/78.3	049	049	049	049
			CRHEATER415A00	32.0	5	24.0/29.4	82.0/100.3	049	049	049	049
			CRHEATER416A00	42.4	5	31.8/38.9	108.7/132.9	051	051	051	051
		HIGH	CRHEATER411A00	10.4	5	7.8/9.6	26.7/32.6	047	047	047	047
			CRHEATER412A00	16.0	5	12.0/14.7	41.0/50.1	047	049	049	049
			CRHEATER414A00	25.0	5	18.8/23.0	64.1/78.3	049	049	049	049
			CRHEATER415A00	32.0	5	24.0/29.4	82.0/100.3	049	049	049	049
			CRHEATER416A00	42.4	5	31.8/38.9	108.7/132.9	051	051	051	051
	460-3-60	STD/ MED	CRHEATER419A00	11.5	5	10.6	36.0	047	047	047	047
			CRHEATER420A00	15.0	5	13.8	47.0	047	047	047	047
			CRHEATER421A00	25.0	5	23.0	78.3	047	047	047	047
			CRHEATER422A00	33.0	5	30.3	103.4	047	047	047	047
			CRHEATER423A00	41.7	5	38.3	130.7	050	050	050	050
		HIGH	CRHEATER419A00	11.5	5	10.6	36.0	047	047	047	047
			CRHEATER420A00	15.0	5	13.8	47.0	047	047	047	047
			CRHEATER421A00	25.0	5	23.0	78.3	047	047	047	047
			CRHEATER422A00	33.0	5	30.3	103.4	047	047	047	047
			CRHEATER423A00	41.7	5	38.3	130.7	050	050	050	050
	575-3-60	STD/ MED	CRHEATER425A00	18.0	5	16.5	56.4	047	047	047	047
			CRHEATER427A00	36.0	5	33.1	112.8	047	047	047	047
		HIGH	CRHEATER425A00	18.0	5	16.5	56.4	047	047	047	047
			CRHEATER427A00	36.0	5	33.1	112.8	047	047	047	047

50GC-*09 Electric Heat Data — Without Non-fused Disconnect

50GC UNIT SIZE	NOM. V-Ph-Hz	IFM TYPE	ELECTRIC HEATER PART NUMBER	NOM (kW)	STD SCCR kA	HIGH SCCR kA[a]	APPLICATION (kW)	APPLICATION OUTPUT (MBH)	SINGLE POINT OR JUNCTION KIT PART NUMBER CRSINGLEXXXA00			
									NO C.O. OR UNPOWERED C.O.		WITH PWRD C.O.	
									NO P.E.	WITH P.E. (pwrd fr/unit)	NO P.E	WITH P.E. (pwrd fr/unit)
50GC-*09	208/230-3-60	STD/ MED	CRHEATER411A00	10.4	5	10	7.8/9.6	26.7/32.6	047	047	047	047
			CRHEATER412A00	16.0	5	10	12.0/14.7	41.0/50.1	047	049	049	049
			CRHEATER414A00	25.0	5	10	18.8/23.0	64.1/78.3	049	049	049	049
			CRHEATER415A00	32.0	5	10	24.0/29.4	82.0/100.3	049	049	049	049
			CRHEATER416A00	42.4	5	10	31.8/38.9	108.7/132.9	051	051	051	051
		HIGH	CRHEATER411A00	10.4	5	10	7.8/9.6	26.7/32.6	047	047	047	047
			CRHEATER412A00	16.0	5	10	12.0/14.7	41.0/50.1	047	049	049	049
			CRHEATER414A00	25.0	5	10	18.8/23.0	64.1/78.3	049	049	049	049
			CRHEATER415A00	32.0	5	10	24.0/29.4	82.0/100.3	049	049	049	049
			CRHEATER416A00	42.4	5	10	31.8/38.9	108.7/132.9	051	051	051	051
	460-3-60	STD/ MED	CRHEATER419A00	11.5	5	10	10.6	36.0	047	047	047	047
			CRHEATER420A00	15.0	5	10	13.8	47.0	047	047	047	047
			CRHEATER421A00	25.0	5	10	23.0	78.3	047	047	047	047
			CRHEATER422A00	33.0	5	10	30.3	103.4	047	047	047	047
			CRHEATER423A00	41.7	5	10	38.3	130.7	050	050	050	050
		HIGH	CRHEATER419A00	11.5	5	10	10.6	36.0	047	047	047	047
			CRHEATER420A00	15.0	5	10	13.8	47.0	047	047	047	047
			CRHEATER421A00	25.0	5	10	23.0	78.3	047	047	047	047
			CRHEATER422A00	33.0	5	10	30.3	103.4	047	047	047	047
			CRHEATER423A00	41.7	5	10	38.3	130.7	050	050	050	050
	575-3-60	STD/ MED	CRHEATER425A00	18.0	5	—	16.5	56.4	047	047	047	047
			CRHEATER427A00	36.0	5	—	33.1	112.8	047	047	047	047
		HIGH	CRHEATER425A00	18.0	5	—	16.5	56.4	047	047	047	047
			CRHEATER427A00	36.0	5	—	33.1	112.8	047	047	047	047

NOTE(S):

a. High SCCR (Short Circuit Current Rating) is not available on the following: units with Humidi-MiZer system, Low Ambient controls, Phase loss monitor, HACR Breaker, Non-fused disconnect, and 575V.

50GC-*09 Electric Heat Data — Without Non-fused Disconnect (cont)

50GC UNIT SIZE	NOM. V-Ph-Hz	IFM TYPE	ELECTRIC HEATER PART NUMBER	NOM (kW)	STD SCCR kA	HIGH SCCR kA[a]	APPLICATION (kW)	APPLICATION OUTPUT (MBH)	HSCCR SINGLE POINT OR JUNCTION KIT PART NUMBER CRSINGLEXXXA00			
									NO C.O. OR UNPOWERED C.O.		WITH PWRD C.O.	
									NO P.E.	WITH P.E. (pwrd fr/unit)	NO P.E	WITH P.E. (pwrd fr/unit)
50GC-*09	208/230-3-60	STD/ MED	CRHEATER411A00	10.4	5	10	7.8/9.6	26.7/32.6	067	067	067	067
			CRHEATER412A00	16.0	5	10	12.0/14.7	41.0/50.1	067	067	067	067
			CRHEATER414A00	25.0	5	10	18.8/23.0	64.1/78.3	068	068	068	068
			CRHEATER415A00	32.0	5	10	24.0/29.4	82.0/100.3	068	068	068	068
			CRHEATER416A00	42.4	5	10	31.8/38.9	108.7/132.9	069	069	069	069
		HIGH	CRHEATER411A00	10.4	5	10	7.8/9.6	26.7/32.6	067	067	067	067
			CRHEATER412A00	16.0	5	10	12.0/14.7	41.0/50.1	067	067	067	067
			CRHEATER414A00	25.0	5	10	18.8/23.0	64.1/78.3	068	068	068	068
			CRHEATER415A00	32.0	5	10	24.0/29.4	82.0/100.3	068	068	068	068
			CRHEATER416A00	42.4	5	10	31.8/38.9	108.7/132.9	069	069	069	069
	460-3-60	STD/ MED	CRHEATER419A00	11.5	5	10	10.6	36.0	067	067	067	067
			CRHEATER420A00	15.0	5	10	13.8	47.0	067	067	067	067
			CRHEATER421A00	25.0	5	10	23.0	78.3	068	068	068	068
			CRHEATER422A00	33.0	5	10	30.3	103.4	068	068	068	068
			CRHEATER423A00	41.7	5	10	38.3	130.7	068	068	068	068
		HIGH	CRHEATER419A00	11.5	5	10	10.6	36.0	067	067	067	067
			CRHEATER420A00	15.0	5	10	13.8	47.0	067	067	067	067
			CRHEATER421A00	25.0	5	10	23.0	78.3	068	068	068	068
			CRHEATER422A00	33.0	5	10	30.3	103.4	068	068	068	068
			CRHEATER423A00	41.7	5	10	38.3	130.7	068	068	068	068
	575-3-60	STD/ MED	CRHEATER425A00	18.0	5	—	16.5	56.4	067	067	067	067
			CRHEATER427A00	36.0	5	—	33.1	112.8	068	068	068	068
		HIGH	CRHEATER425A00	18.0	5	—	16.5	56.4	067	067	067	067
			CRHEATER427A00	36.0	5	—	33.1	112.8	068	068	068	068

NOTE(S):

a. High SCCR (Short Circuit Current Rating) is not available on the following: units with Humidi-MiZer system, Low Ambient controls, Phase loss monitor, HACR Breaker, Non-fused disconnect, and 575V.

50GC-*09 Electric Heat Data — With Non-fused Disconnect

50GC UNIT SIZE	NOM. V-Ph-Hz	IFM TYPE	ELECTRIC HEATER PART NUMBER	NOM (kW)	STD SCCR kA	APPLICATION (kW)	APPLICATION OUTPUT (MBH)	SINGLE POINT OR JUNCTION KIT PART NUMBER CRSINGLEXXXA00			
								NO C.O. OR UNPOWERED C.O.		WITH PWRD C.O.	
								NO P.E.	WITH P.E. (pwrd fr/unit)	NO P.E	WITH P.E. (pwrd fr/unit)
50GC-*09	208/230-3-60	STD/ MED	CRHEATER411A00	10.4	5	7.8/9.6	26.7/32.6	047	047	047	047
			CRHEATER412A00	16.0	5	12.0/14.7	41.0/50.1	047	049	049	049
			CRHEATER414A00	25.0	5	18.8/23.0	64.1/78.3	049	049	049	049
			CRHEATER415A00	32.0	5	24.0/29.4	82.0/100.3	049	049	049	049
			CRHEATER416A00	42.4	5	31.8/38.9	108.7/132.9	051	051	051	051
		HIGH	CRHEATER411A00	10.4	5	7.8/9.6	26.7/32.6	047	047	047	047
			CRHEATER412A00	16.0	5	12.0/14.7	41.0/50.1	047	049	049	049
			CRHEATER414A00	25.0	5	18.8/23.0	64.1/78.3	049	049	049	049
			CRHEATER415A00	32.0	5	24.0/29.4	82.0/100.3	049	049	049	049
			CRHEATER416A00	42.4	5	31.8/38.9	108.7/132.9	051	051	051	051
	460-3-60	STD/ MED	CRHEATER419A00	11.5	5	10.6	36.0	047	047	047	047
			CRHEATER420A00	15.0	5	13.8	47.0	047	047	047	047
			CRHEATER421A00	25.0	5	23.0	78.3	047	047	047	047
			CRHEATER422A00	33.0	5	30.3	103.4	047	047	047	047
			CRHEATER423A00	41.7	5	38.3	130.7	050	050	050	050
		HIGH	CRHEATER419A00	11.5	5	10.6	36.0	047	047	047	047
			CRHEATER420A00	15.0	5	13.8	47.0	047	047	047	047
			CRHEATER421A00	25.0	5	23.0	78.3	047	047	047	047
			CRHEATER422A00	33.0	5	30.3	103.4	047	047	047	047
			CRHEATER423A00	41.7	5	38.3	130.7	050	050	050	050
	575-3-60	STD/ MED	CRHEATER425A00	18.0	5	16.5	56.4	047	047	047	047
			CRHEATER427A00	36.0	5	33.1	112.8	047	047	047	047
		HIGH	CRHEATER425A00	18.0	5	16.5	56.4	047	047	047	047
			CRHEATER427A00	36.0	5	33.1	112.8	047	047	047	047

50GC-*12 Electric Heat Data — Without Non-fused Disconnect

50GC UNIT SIZE	NOM. V-Ph-Hz	IFM TYPE	ELECTRIC HEATER PART NUMBER	NOM (kW)	STD SCCR kA	HIGH SCCR kA[a]	APPLICATION (kW)	APPLICATION OUTPUT (MBH)	SINGLE POINT OR JUNCTION KIT PART NUMBER CRSINGLEXXXA00			
									NO C.O. OR UNPOWERED C.O.		WITH PWRD C.O.	
									NO P.E.	WITH P.E. (pwrd fr/unit)	NO P.E	WITH P.E. (pwrd fr/unit)
50GC-*12	208/230-3-60	STD/ MED	CRHEATER411A00	10.4	5	—	7.8/9.6	26.7/32.6	047	049	049	049
			CRHEATER412A00	16.0	5	—	12.0/14.7	41.0/50.1	047	049	049	049
			CRHEATER415A00	32.0	5	—	24.0/29.4	82.0/100.3	049	049	049	049
			CRHEATER416A00	42.4	5	—	31.8/38.9	108.7/132.9	051	051	051	051
			CRHEATER417A00	50.0	5	—	37.6/45.9	128.1/156.7	051	051	051	051
		HIGH	CRHEATER411A00	10.4	5	—	7.8/9.6	26.7/32.6	049	049	049	049
			CRHEATER412A00	16.0	5	—	12.0/14.7	41.0/50.1	049	049	049	049
			CRHEATER415A00	32.0	5	—	24.0/29.4	82.0/100.3	049	049	049	049
			CRHEATER416A00	42.4	5	—	31.8/38.9	108.7/132.9	051	051	051	051
			CRHEATER417A00	50.0	5	—	37.6/45.9	128.1/156.7	051	051	051	051
	460-3-60	STD/ MED	CRHEATER420A00	15.0	5	—	13.8	47.0	047	047	047	047
			CRHEATER422A00	33.0	5	—	30.3	103.4	047	047	047	047
			CRHEATER423A00	41.7	5	—	38.3	130.7	050	050	050	050
			CRHEATER424A00	50.0	5	—	45.9	156.7	050	050	050	050
		HIGH	CRHEATER420A00	15.0	5	—	13.8	47.0	047	047	047	047
			CRHEATER422A00	33.0	5	—	30.3	103.4	047	047	047	050
			CRHEATER423A00	41.7	5	—	38.3	130.7	050	050	050	050
			CRHEATER424A00	50.0	5	—	45.9	156.7	050	050	050	050
	575-3-60	STD/ MED	CRHEATER425A00	18.0	5	—	16.5	56.4	047	047	047	047
			CRHEATER427A00	36.0	5	—	33.1	112.8	047	047	047	047
			CRHEATER428A00	50.0	5	—	45.9	156.7	047	047	047	047
		HIGH	CRHEATER425A00	18.0	5	—	16.5	56.4	047	047	047	047
			CRHEATER427A00	36.0	5	—	33.1	112.8	047	047	047	047
			CRHEATER428A00	50.0	5	—	45.9	156.7	047	047	047	050

NOTE(S):

a. High SCCR (Short Circuit Current Rating) is not available on size 12 units due to control box constraints.

50GC-*12 Electric Heat Data — Without Non-fused Disconnect (cont)

50GC UNIT SIZE	NOM. V-Ph-Hz	IFM TYPE	ELECTRIC HEATER PART NUMBER	NOM (kW)	STD SCCR kA	HIGH SCCR kA[a]	APPLICATION (kW)	APPLICATION OUTPUT (MBH)	HSCCR SINGLE POINT OR JUNCTION KIT PART NUMBER CRSINGLEXXXA00			
									NO C.O. OR UNPOWERED C.O.		WITH PWRD C.O.	
									NO P.E.	WITH P.E. (pwrd fr/unit)	NO P.E	WITH P.E. (pwrd fr/unit)
50GC-*12	208/230-3-60	STD/MED	CRHEATER411A00	10.4	5	—	7.8/9.6	26.7/32.6	067	067	067	067
			CRHEATER412A00	16.0	5	—	12.0/14.7	41.0/50.1	067	067	067	067
			CRHEATER415A00	32.0	5	—	24.0/29.4	82.0/100.3	068	068	068	068
			CRHEATER416A00	42.4	5	—	31.8/38.9	108.7/132.9	069	069	069	069
			CRHEATER417A00	50.0	5	—	37.6/45.9	128.1/156.7	069	069	069	069
		HIGH	CRHEATER411A00	10.4	5	—	7.8/9.6	26.7/32.6	067	067	067	067
			CRHEATER412A00	16.0	5	—	12.0/14.7	41.0/50.1	067	067	067	067
			CRHEATER415A00	32.0	5	—	24.0/29.4	82.0/100.3	068	068	068	068
			CRHEATER416A00	42.4	5	—	31.8/38.9	108.7/132.9	069	069	069	069
			CRHEATER417A00	50.0	5	—	37.6/45.9	128.1/156.7	069	069	069	069
	460-3-60	STD/MED	CRHEATER420A00	15.0	5	—	13.8	47.0	067	067	067	067
			CRHEATER422A00	33.0	5	—	30.3	103.4	068	068	068	068
			CRHEATER423A00	41.7	5	—	38.3	130.7	068	068	068	068
			CRHEATER424A00	50.0	5	—	45.9	156.7	068	068	068	068
		HIGH	CRHEATER420A00	15.0	5	—	13.8	47.0	067	067	067	067
			CRHEATER422A00	33.0	5	—	30.3	103.4	068	068	068	068
			CRHEATER423A00	41.7	5	—	38.3	130.7	068	068	068	068
			CRHEATER424A00	50.0	5	—	45.9	156.7	068	068	068	068
	575-3-60	STD/MED	CRHEATER425A00	18.0	5	—	16.5	56.4	067	067	067	067
			CRHEATER427A00	36.0	5	—	33.1	112.8	068	068	068	068
			CRHEATER428A00	50.0	5	—	45.9	156.7	068	068	068	068
		HIGH	CRHEATER425A00	18.0	5	—	16.5	56.4	067	067	067	067
			CRHEATER427A00	36.0	5	—	33.1	112.8	068	068	068	068
			CRHEATER428A00	50.0	5	—	45.9	156.7	068	068	068	068

NOTE(S):

a. High SCCR (Short Circuit Current Rating) is not available on size 12 units due to control box constraints.

50GC-*12 Electric Heat Data — With Non-fused Disconnect

50GC UNIT SIZE	NOM. V-Ph-Hz	IFM TYPE	ELECTRIC HEATER PART NUMBER	NOM (kW)	STD SCCR kA	APPLICATION (kW)	APPLICATION OUTPUT (MBH)	SINGLE POINT OR JUNCTION KIT PART NUMBER CRSINGLEXXXA00			
								NO C.O. OR UNPOWERED C.O.		WITH PWRD C.O.	
								NO P.E.	WITH P.E. (pwrd fr/unit)	NO P.E	WITH P.E. (pwrd fr/unit)
50GC-*12	208/230-3-60	STD/ MED	CRHEATER411A00	10.4	5	7.8/9.6	26.7/32.6	047	049	049	049
			CRHEATER412A00	16.0	5	12.0/14.7	41.0/50.1	047	049	049	049
			CRHEATER415A00	32.0	5	24.0/29.4	82.0/100.3	049	049	049	049
			CRHEATER416A00	42.4	5	31.8/38.9	108.7/132.9	051	051	051	051
			CRHEATER417A00	50.0	5	37.6/45.9	128.1/156.7	051	051	051	051
		HIGH	CRHEATER411A00	10.4	5	7.8/9.6	26.7/32.6	049	049	049	049
			CRHEATER412A00	16.0	5	12.0/14.7	41.0/50.1	049	049	049	049
			CRHEATER415A00	32.0	5	24.0/29.4	82.0/100.3	049	049	049	049
			CRHEATER416A00	42.4	5	31.8/38.9	108.7/132.9	051	051	051	051
			CRHEATER417A00	50.0	5	37.6/45.9	128.1/156.7	051	051	051	051
	460-3-60	STD/ MED	CRHEATER420A00	15.0	5	13.8	47.0	047	047	047	047
			CRHEATER422A00	33.0	5	30.3	103.4	047	047	047	047
			CRHEATER423A00	41.7	5	38.3	130.7	050	050	050	050
			CRHEATER424A00	50.0	5	45.9	156.7	050	050	050	050
		HIGH	CRHEATER420A00	15.0	5	13.8	47.0	047	047	047	047
			CRHEATER422A00	33.0	5	30.3	103.4	047	047	047	050
			CRHEATER423A00	41.7	5	38.3	130.7	050	050	050	050
			CRHEATER424A00	50.0	5	45.9	156.7	050	050	050	050
	575-3-60	STD/ MED	CRHEATER425A00	18.0	5	16.5	56.4	047	047	047	047
			CRHEATER427A00	36.0	5	33.1	112.8	047	047	047	047
			CRHEATER428A00	50.0	5	45.9	156.7	047	047	047	047
		HIGH	CRHEATER425A00	18.0	5	16.5	56.4	047	047	047	047
			CRHEATER427A00	36.0	5	33.1	112.8	047	047	047	047
			CRHEATER428A00	50.0	5	45.9	156.7	047	047	047	050

50GC-*14 Electric Heat Data — Without Non-fused Disconnect

50GC UNIT SIZE	NOM. V-Ph-Hz	IFM TYPE	ELECTRIC HEATER PART NUMBER	NOM (kW)	STD SCCR kA	HIGH SCCR kA[a]	APPLICATION (kW)	APPLICATION OUTPUT (MBH)	SINGLE POINT OR JUNCTION KIT PART NUMBER CRSINGLEXXXA00			
									NO C.O. OR UNPOWERED C.O.		WITH PWRD C.O.	
									NO P.E.	WITH P.E. (pwrd fr/unit)	NO P.E	WITH P.E. (pwrd fr/unit)
50GC-*14	208/230-3-60	STD/MED	CRHEATER412A00	16.0	5	10	12.0/14.7	41.0/50.1	049	049	049	049
			CRHEATER414A00	25.0	5	10	18.8/23.0	64.1/78.3	049	049	049	049
			CRHEATER415A00	32.0	5	10	24.0/29.4	82.0/100.3	049	049	049	049
			CRHEATER416A00	42.4	5	10	31.8/38.9	108.7/132.9	051	051	051	051
			CRHEATER417A00	50.0	5	10	37.6/45.9	128.1/156.7	051	051	051	051
		HIGH	CRHEATER412A00	16.0	5	10	12.0/14.7	41.0/50.1	049	049	049	049
			CRHEATER414A00	25.0	5	10	18.8/23.0	64.1/78.3	049	049	049	049
			CRHEATER415A00	32.0	5	10	24.0/29.4	82.0/100.3	049	049	049	049
			CRHEATER416A00	42.4	5	10	31.8/38.9	108.7/132.9	051	051	051	051
			CRHEATER417A00	50.0	5	10	37.6/45.9	128.1/156.7	051	051	051	051
	460-3-60	STD/MED	CRHEATER420A00	15.0	5	10	13.8	47.0	—	—	—	—
			CRHEATER421A00	25.0	5	10	23.0	78.3	047	047	047	047
			CRHEATER422A00	33.0	5	10	30.3	103.4	047	047	047	047
			CRHEATER423A00	41.7	5	10	38.3	130.7	050	050	050	050
			CRHEATER424A00	50.0	5	10	45.9	156.7	050	050	050	050
		HIGH	CRHEATER420A00	15.0	5	10	13.8	47.0	—	—	—	—
			CRHEATER421A00	25.0	5	10	23.0	78.3	047	047	047	047
			CRHEATER422A00	33.0	5	10	30.3	103.4	047	047	047	050
			CRHEATER423A00	41.7	5	10	38.3	130.7	050	050	050	050
			CRHEATER424A00	50.0	5	10	45.9	156.7	050	050	050	050
	575-3-60	STD/MED	CRHEATER425A00	18.0	5	—	16.5	56.4	—	—	—	—
			CRHEATER426A00	24.8	5	—	22.8	77.7	047	047	047	047
			CRHEATER427A00	36.0	5	—	33.1	112.8	047	047	047	047
			CRHEATER428A00	50.0	5	—	45.9	156.7	047	047	047	047
		HIGH	CRHEATER425A00	18.0	5	—	16.5	56.4	—	—	—	—
			CRHEATER426A00	24.8	5	—	22.8	77.7	047	047	047	047
			CRHEATER427A00	36.0	5	—	33.1	112.8	047	047	047	047
			CRHEATER428A00	50.0	5	—	45.9	156.7	047	047	047	050

NOTE(S):

a. High SCCR (Short Circuit Current Rating) is not available on the following: units with Humidi-MiZer system, Low Ambient controls, Phase loss monitor, HACR Breaker, Non-fused disconnect, and 575V.

50GC-*14 Electric Heat Data — Without Non-fused Disconnect (cont)

50GC UNIT SIZE	NOM. V-Ph-Hz	IFM TYPE	ELECTRIC HEATER PART NUMBER	NOM (kW)	STD SCCR kA	HIGH SCCR kA[a]	APPLICATION (kW)	APPLICATION OUTPUT (MBH)	HSCCR SINGLE POINT OR JUNCTION KIT PART NUMBER CRSINGLEXXXA00			
									NO C.O. OR UNPOWERED C.O.		WITH PWRD C.O.	
									NO P.E.	WITH P.E. (pwrd fr/unit)	NO P.E	WITH P.E. (pwrd fr/unit)
50GC-*14	208/230-3-60	STD/ MED	CRHEATER412A00	16.0	5	10	12.0/14.7	41.0/50.1	067	067	067	067
			CRHEATER414A00	25.0	5	10	18.8/23.0	64.1/78.3	068	068	068	068
			CRHEATER415A00	32.0	5	10	24.0/29.4	82.0/100.3	068	068	068	068
			CRHEATER416A00	42.4	5	10	31.8/38.9	108.7/132.9	069	069	069	069
			CRHEATER417A00	50.0	5	10	37.6/45.9	128.1/156.7	069	069	069	069
		HIGH	CRHEATER412A00	16.0	5	10	12.0/14.7	41.0/50.1	067	067	067	067
			CRHEATER414A00	25.0	5	10	18.8/23.0	64.1/78.3	068	068	068	068
			CRHEATER415A00	32.0	5	10	24.0/29.4	82.0/100.3	068	068	068	068
			CRHEATER416A00	42.4	5	10	31.8/38.9	108.7/132.9	069	069	069	069
			CRHEATER417A00	50.0	5	10	37.6/45.9	128.1/156.7	069	069	069	069
	460-3-60	STD/ MED	CRHEATER420A00	15.0	5	10	13.8	47.0	067	067	067	067
			CRHEATER421A00	25.0	5	10	23.0	78.3	068	068	068	068
			CRHEATER422A00	33.0	5	10	30.3	103.4	068	068	068	068
			CRHEATER423A00	41.7	5	10	38.3	130.7	068	068	068	068
			CRHEATER424A00	50.0	5	10	45.9	156.7	068	068	068	068
		HIGH	CRHEATER420A00	15.0	5	10	13.8	47.0	067	067	067	067
			CRHEATER421A00	25.0	5	10	23.0	78.3	068	068	068	068
			CRHEATER422A00	33.0	5	10	30.3	103.4	068	068	068	068
			CRHEATER423A00	41.7	5	10	38.3	130.7	068	068	068	068
			CRHEATER424A00	50.0	5	10	45.9	156.7	068	068	068	068
	575-3-60	STD/ MED	CRHEATER425A00	18.0	5	—	16.5	56.4	067	067	067	067
			CRHEATER426A00	24.8	5	—	22.8	77.7	068	068	068	068
			CRHEATER427A00	36.0	5	—	33.1	112.8	068	068	068	068
			CRHEATER428A00	50.0	5	—	45.9	156.7	068	068	068	068
		HIGH	CRHEATER425A00	18.0	5	—	16.5	56.4	067	067	067	067
			CRHEATER426A00	24.8	5	—	22.8	77.7	068	068	068	068
			CRHEATER427A00	36.0	5	—	33.1	112.8	068	068	068	068
			CRHEATER428A00	50.0	5	—	45.9	156.7	068	068	068	068

NOTE(S):

a. High SCCR (Short Circuit Current Rating) is not available on the following: units with Humidi-MiZer system, Low Ambient controls, Phase loss monitor, HACR Breaker, Non-fused disconnect, and 575V.

50GC-*14 Electric Heat Data — With Non-fused Disconnect

50GC UNIT SIZE	NOM. V-Ph-Hz	IFM TYPE	ELECTRIC HEATER PART NUMBER	NOM (kW)	STD SCCR kA	APPLICATION (kW)	APPLICATION OUTPUT (MBH)	SINGLE POINT OR JUNCTION KIT PART NUMBER CRSINGLEXXXA00			
								NO C.O. OR UNPOWERED C.O.		WITH PWRD C.O.	
								NO P.E.	WITH P.E. (pwrd fr/unit)	NO P.E	WITH P.E. (pwrd fr/unit)
50GC-*14	208/230-3-60	STD/ MED	CRHEATER412A00	16.0	5	12.0/14.7	41.0/50.1	049	049	049	049
			CRHEATER414A00	25.0	5	18.8/23.0	64.1/78.3	049	049	049	049
			CRHEATER415A00	32.0	5	24.0/29.4	82.0/100.3	049	049	049	049
			CRHEATER416A00	42.4	5	31.8/38.9	108.7/132.9	051	051	051	051
			CRHEATER417A00	50.0	5	37.6/45.9	128.1/156.7	051	051	051	051
		HIGH	CRHEATER412A00	16.0	5	12.0/14.7	41.0/50.1	049	049	049	049
			CRHEATER414A00	25.0	5	18.8/23.0	64.1/78.3	049	049	049	049
			CRHEATER415A00	32.0	5	24.0/29.4	82.0/100.3	049	049	049	049
			CRHEATER416A00	42.4	5	31.8/38.9	108.7/132.9	051	051	051	051
			CRHEATER417A00	50.0	5	37.6/45.9	128.1/156.7	051	051	051	051
	460-3-60	STD/ MED	CRHEATER420A00	15.0	5	13.8	47.0	—	—	—	—
			CRHEATER421A00	25.0	5	23.0	78.3	047	047	047	047
			CRHEATER422A00	33.0	5	30.3	103.4	047	047	047	047
			CRHEATER423A00	41.7	5	38.3	130.7	050	050	050	050
			CRHEATER424A00	50.0	5	45.9	156.7	050	050	050	050
		HIGH	CRHEATER420A00	15.0	5	13.8	47.0	—	—	—	—
			CRHEATER421A00	25.0	5	23.0	78.3	047	047	047	047
			CRHEATER422A00	33.0	5	30.3	103.4	047	047	047	050
			CRHEATER423A00	41.7	5	38.3	130.7	050	050	050	050
			CRHEATER424A00	50.0	5	45.9	156.7	050	050	050	050
	575-3-60	STD/ MED	CRHEATER425A00	18.0	5	16.5	56.4	—	—	—	—
			CRHEATER426A00	24.8	5	22.8	77.7	047	047	047	047
			CRHEATER427A00	36.0	5	33.1	112.8	047	047	047	047
			CRHEATER428A00	50.0	5	45.9	156.7	047	047	047	047
		HIGH	CRHEATER425A00	18.0	5	16.5	56.4	—	—	—	—
			CRHEATER426A00	24.8	5	22.8	77.7	047	047	047	047
			CRHEATER427A00	36.0	5	33.1	112.8	047	047	047	047
			CRHEATER428A00	50.0	5	45.9	156.7	047	047	047	050

Typical Control Wiring Diagram — 48GC 07-09 208-230/460/575-3-60 Unit with Electromechanical Control and POL224 Economizer

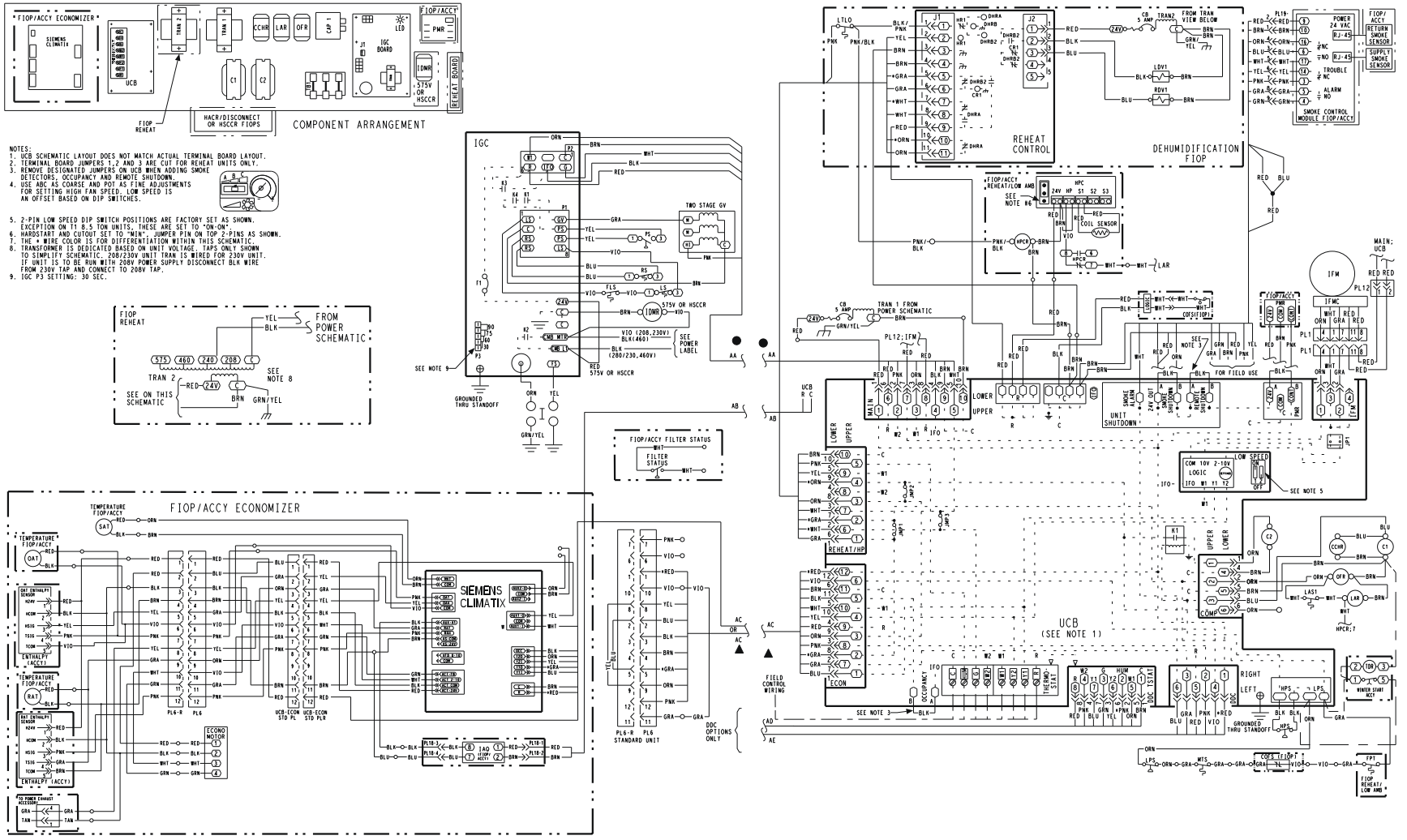

Typical Control Wiring Diagram — 48GC 07-09 208-230/460/575-3-60 Unit with SystemVu™ Controller

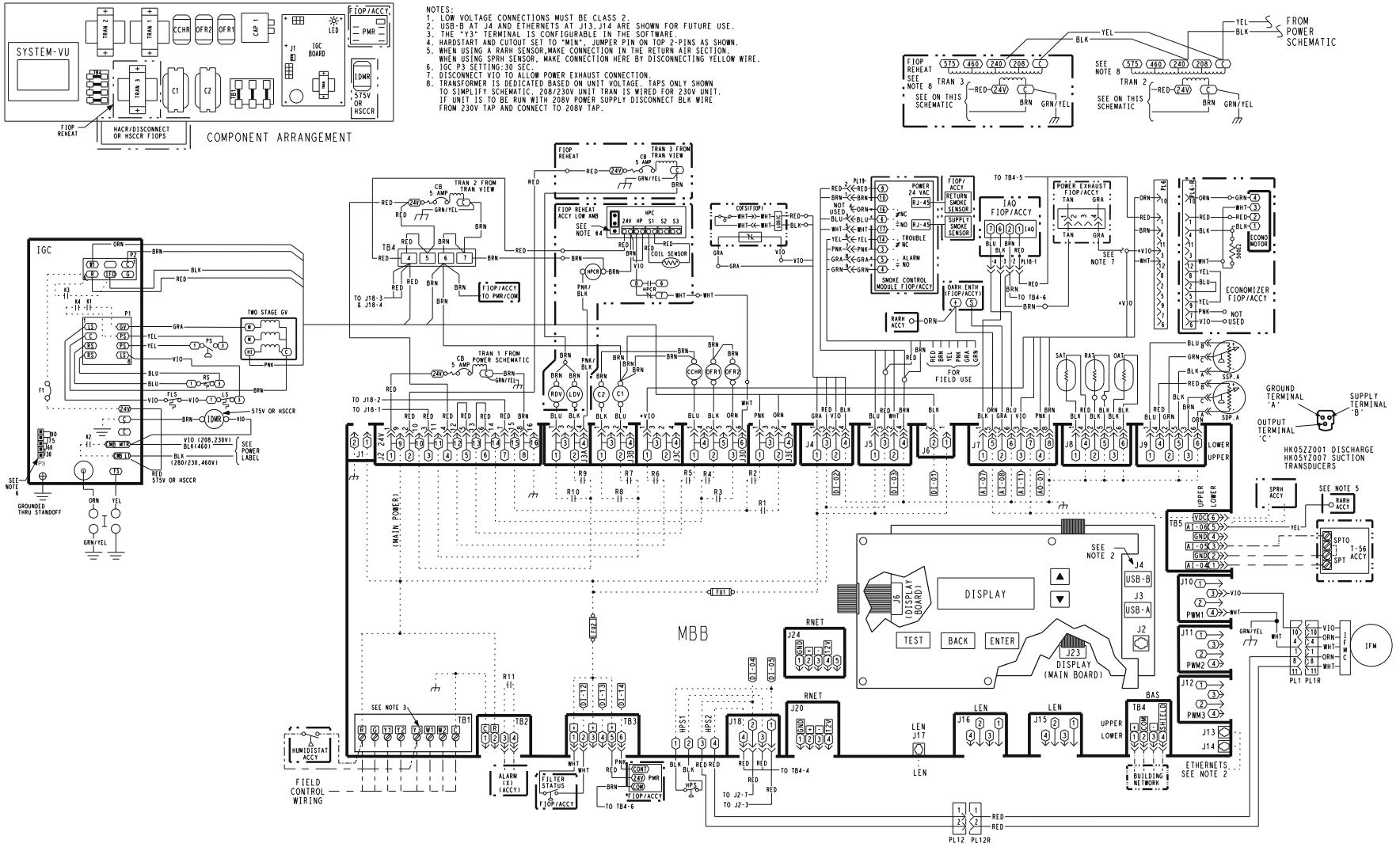

Typical Power Wiring Diagram — 48GC 07-09 208-230/460-3-60 Unit with Electromechanical or SystemVu™ Controllers

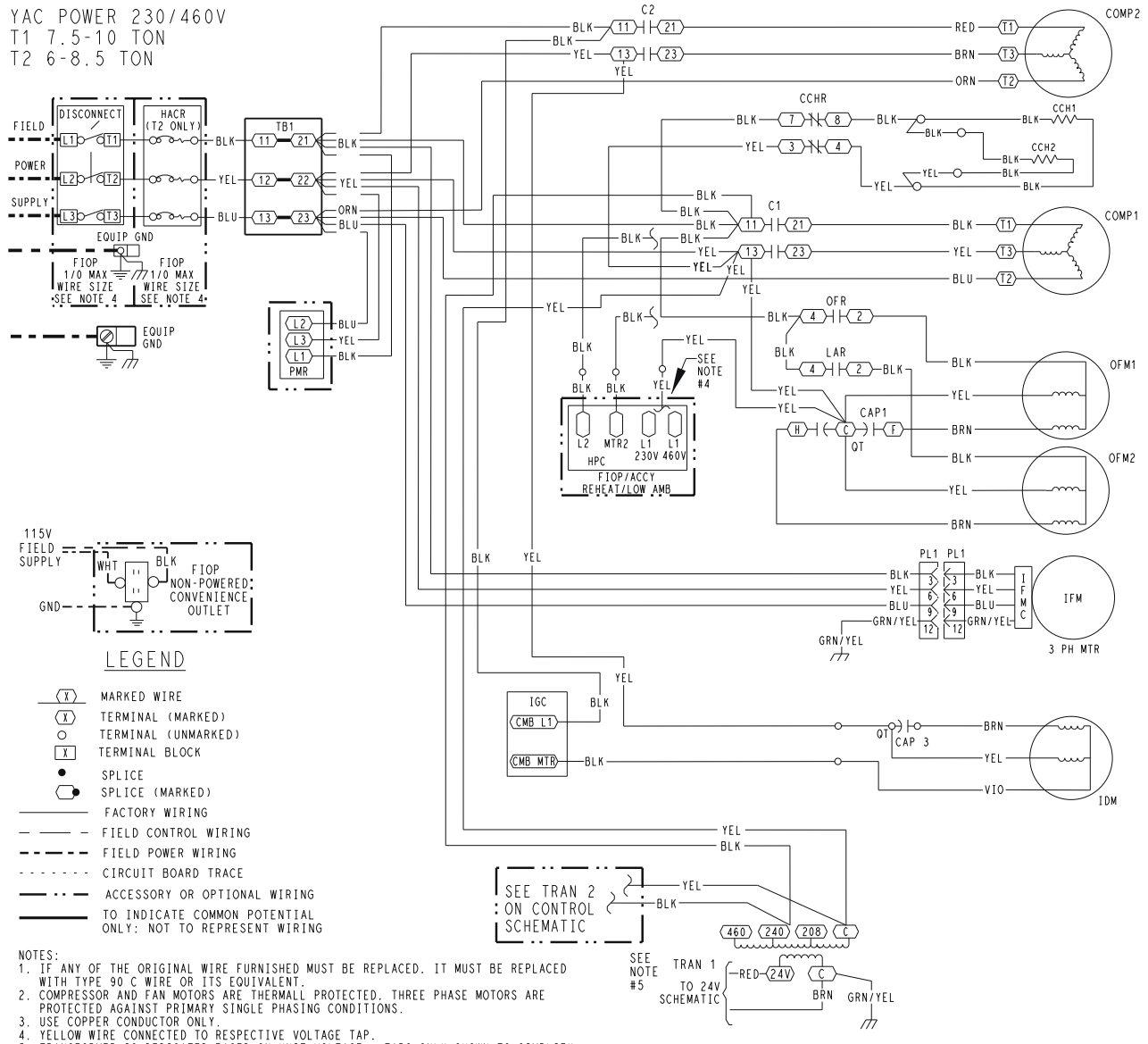

LEGEND

- MARKED WIRE
- TERMINAL (MARKED)
- TERMINAL (UNMARKED)
- TERMINAL BLOCK
- SPLICE
- SPLICE (MARKED)
- FACTORY WIRING
- FIELD CONTROL WIRING
- FIELD POWER WIRING
- CIRCUIT BOARD TRACE
- ACCESSORY OR OPTIONAL WIRING
- TO INDICATE COMMON POTENTIAL ONLY: NOT TO REPRESENT WIRING

NOTES:
1. IF ANY OF THE ORIGINAL WIRE FURNISHED MUST BE REPLACED. IT MUST BE REPLACED WITH TYPE 90 C WIRE OR ITS EQUIVALENT.
2. COMPRESSOR AND FAN MOTORS ARE THERMALL PROTECTED. THREE PHASE MOTORS ARE PROTECTED AGAINST PRIMARY SINGLE PHASING CONDITIONS.
3. USE COPPER CONDUCTOR ONLY.
4. YELLOW WIRE CONNECTED TO RESPECTIVE VOLTAGE TAP.
5. TRANSFORMER IS DEDICATED BASED ON UNIT VOLTAGE. TAPS ONLY SHOWN TO SIMPLIFY SCHEMATIC. 208/230V UNIT TRAN IS WIRED FOR 230V UNIT. IF UNIT IS TO BE RUN WITH 208V POWER SUPPLY DISCONNECT BLK WIRE FROM 230V TAP AND CONNECT TO 208V TAP.

ACCY	ACCESSORY
AMB	AMBIENT
C	CONTACTOR,COMPRESSOR
CAP	CAPACITOR
CB	CIRCUIT BREAKER
CCH	CRANKCASE HEATER
CCHR	CRANKCASE HEATER RELAY
CMB	COMBUSTION
COFS	CONDENSATE OVERFLOW SWT
COMP	COMPRESSOR MOTOR
DDC	DIRECT DIGITAL CONTROL
ERV	ENERGY RECOVERY VENTILATOR
FIOP	FACTORY INSTALLED OPTION
FLS	FAN LIMIT SWITCH
FPT	FREEZE PROTECTION THERMOSTAT
FSD	FIRE SHUT DOWN
FS	FLAME SENSOR
FU	FUSE
GND	GROUND
GVR	GAS VALVE RELAY
HPC	HEAD PRESSURE CONTROL
HPS	HIGH PRESSURE SWITCH
HS	HALL EFFECT SENSOR
I	IGNITOR
IAQ	INDOOR AIR QUALITY SENSORS
IDM	INDUCED DRAFT MOTOR
IFCB	INDOOR FAN CIRCUIT BREAKER
IFM	INDOOR FAN MOTOR
IFMC	INDOOR FAN CONTROLLER
IGC	INTEGRATED GAS CONTROL
JMP	JUMPER
LA	LOW AMBIENT
LAR	LOW AMBIENT RELAY
LDV	LIQUID DIVERTER VALVE
LPS	LOW PRESSURE SWITCH
LSM	LIMIT SWITCH (MANUAL RESET)
LS	LIMIT SWITCH
LTLO	LOW TEMPERATURE LOCKOUT
MGV	MAIN GAS VALVE
MOV	VOLTAGE RESTRICTOR
MTR	MOTOR
MTS	MIXED AIR TEMPERATURE SWITCH
OAQ	OUTDOOR AIR QUALITY
OARH	OUTSIDE AIR RELATIVE HUMIDITY
OAT	OUTDOOR AIR TEMP. SENSOR
OFM	OUTDOOR FAN MOTOR
OFR	OUTDOOR FAN RELAY
OL	OVERLOAD
PL	PLUG ASSEMBLY
POT	POTENTIOMETER
PMR	PHASE MONITOR RELAY
QT	QUADRUPLE TERMINAL
RARH	RETURN AIR RELATIVE HUMIDITY
RAT	RETURN AIR TEMP. SENSOR
RDB	REFRIGERANT DISSIPATION BOARD
RDS	REFRIGERANT DISSIPATION SENSOR
RDV	REHEAT DISCHARGE VALVE
RS	ROLLOUT SWITCH
SAT	SUPPLY AIR TEMP. SENSOR
SEN	SENSOR
SPRH	SPACE RELATIVE HUMIDITY
SPT	SPACE TEMPERATURE SENSOR
SPTO	SPACE TEMPERATURE OFFSET
STD	STANDARD
TB	TERMINAL BLOCK
TDR	TIME DELAY RELAY(WINTER START)
TRAN	TRANSFORMER
UCB	UNIT CONTROL BOARD

48TM005719 | F

Typical Control Wiring Diagram — 48GC 12 208-230/460/575-3-60 Unit with Electromechanical Control and POL224 Economizer

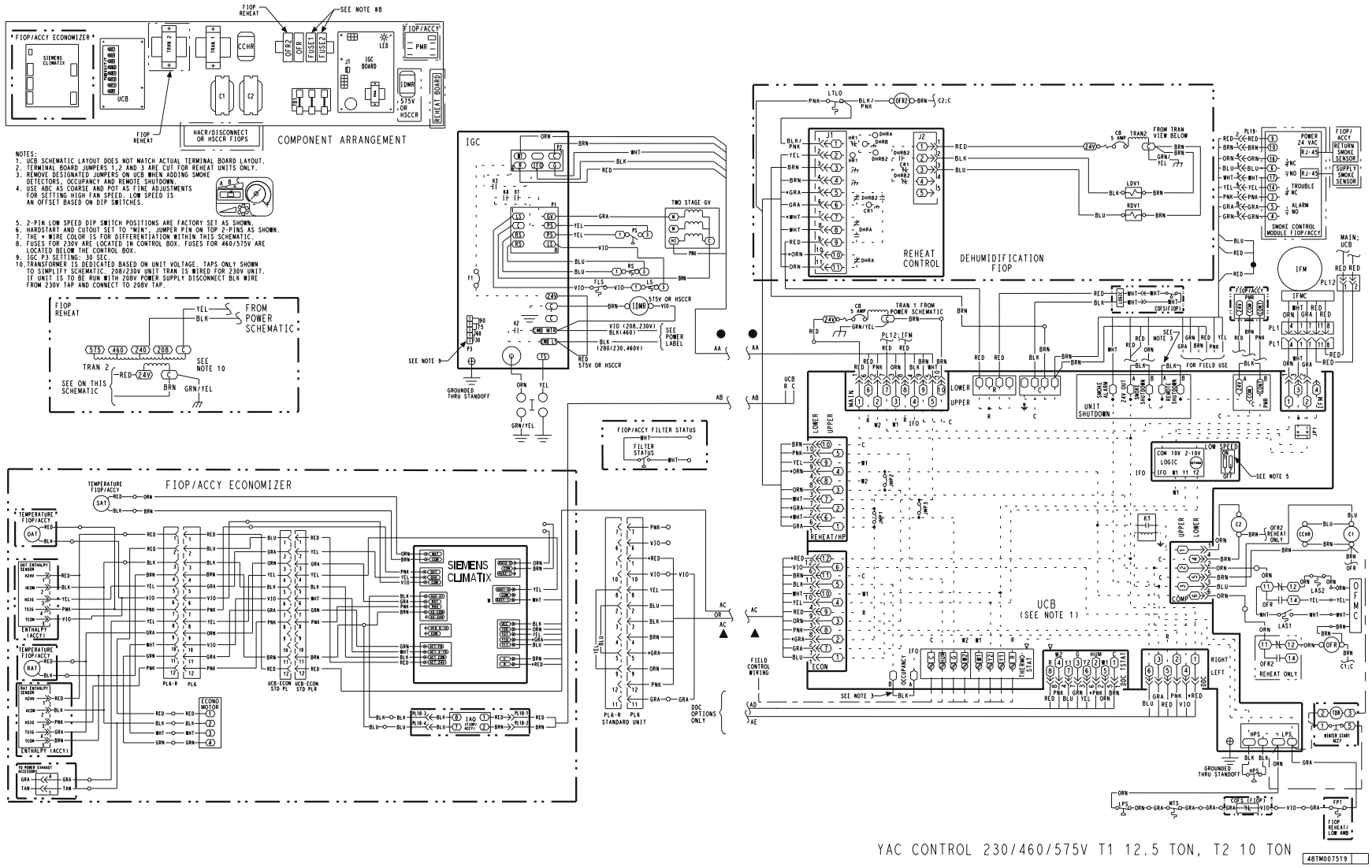

Typical Power Wiring Diagram — 48GC 12 208-230/3/60 Unit with Electromechanical Controller

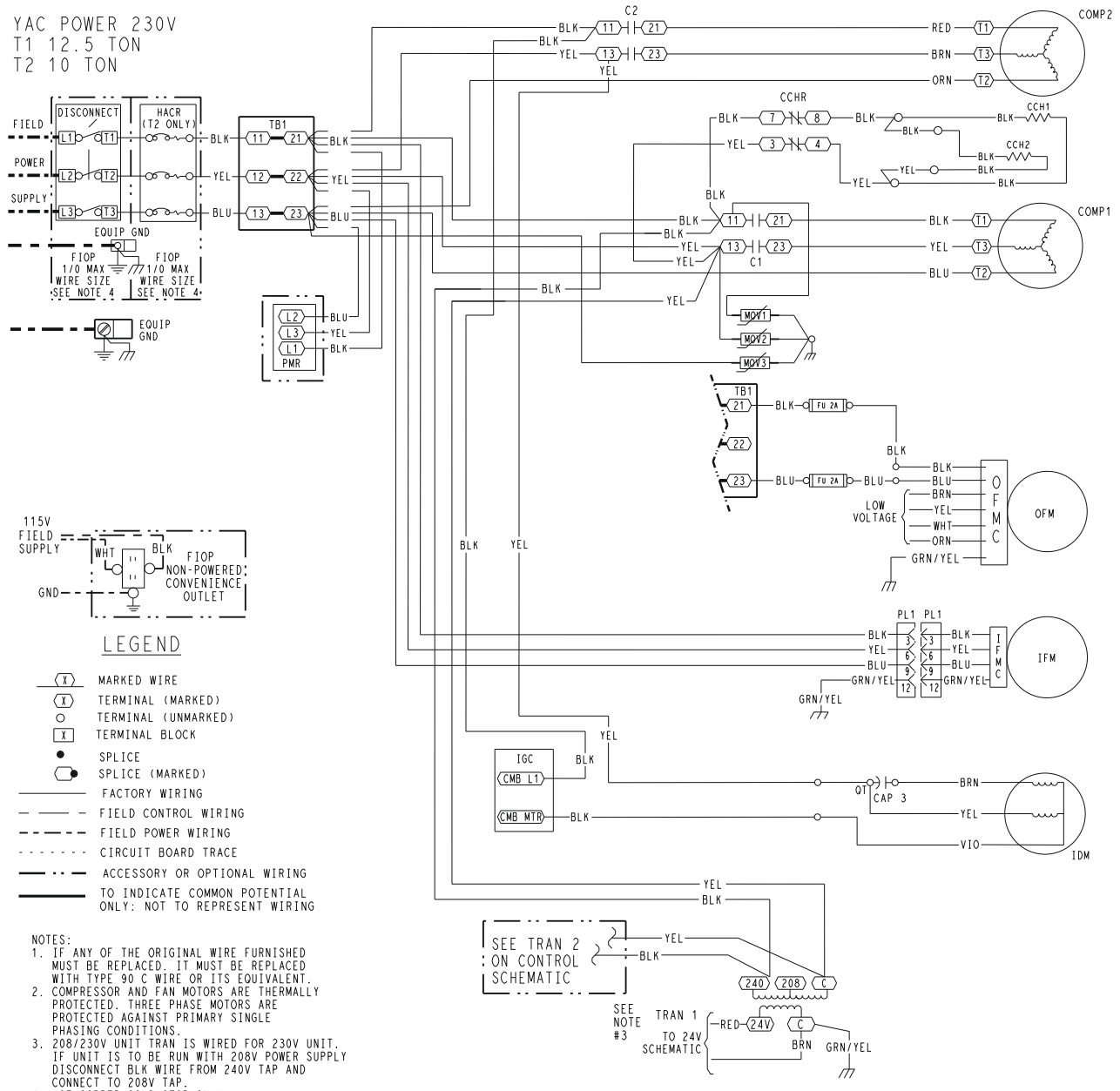

NOTES:
1. IF ANY OF THE ORIGINAL WIRE FURNISHED MUST BE REPLACED. IT MUST BE REPLACED WITH TYPE 90 C WIRE OR ITS EQUIVALENT.
2. COMPRESSOR AND FAN MOTORS ARE THERMALLY PROTECTED. THREE PHASE MOTORS ARE PROTECTED AGAINST PRIMARY SINGLE PHASING CONDITIONS.
3. 208/230V UNIT TRAN IS WIRED FOR 230V UNIT. IF UNIT IS TO BE RUN WITH 208V POWER SUPPLY DISCONNECT BLK WIRE FROM 240V TAP AND CONNECT TO 208V TAP.
4. USE COPPER CONDUCTOR ONLY.

ACCY	ACCESSORY
AMB	AMBIENT
C	CONTACTOR,COMPRESSOR
CAP	CAPACITOR
CB	CIRCUIT BREAKER
CCH	CRANKCASE HEATER
CCHR	CRANKCASE HEATER RELAY
CMB	COMBUSTION
COFS	CONDENSATE OVERFLOW SWT
COMP	COMPRESSOR MOTOR
DDC	DIRECT DIGITAL CONTROL
ERV	ENERGY RECOVERY VENTILATOR
FIOP	FACTORY INSTALLED OPTION
FLS	FAN LIMIT SWITCH
FPT	FREEZE PROTECTION THERMOSTAT
FSD	FIRE SHUT DOWN
FS	FLAME SENSOR
FU	FUSE
GND	GROUND
GVR	GAS VALVE RELAY
HPC	HEAD PRESSURE CONTROL
HPS	HIGH PRESSURE SWITCH
HS	HALL EFFECT SENSOR
I	IGNITOR
IAQ	INDOOR AIR QUALITY SENSORS
IDM	INDUCED DRAFT MOTOR
IFCB	INDOOR FAN CIRCUIT BREAKER
IFM	INDOOR FAN MOTOR
IFMC	INDOOR FAN CONTROLLER
IGC	INTEGRATED GAS CONTROL
JMP	JUMPER
LA	LOW AMBIENT
LDV	LIQUID DIVERTER VALVE
LPS	LOW PRESSURE SWITCH
LSM	LIMIT SWITCH (MANUAL RESET)
LS	LIMIT SWITCH
LTLO	LOW TEMPERATURE LOCKOUT
MGV	MAIN GAS VALVE
MOV	VOLTAGE RESTRICTOR
MTR	MOTOR
MTS	MIXED AIR TEMPERATURE SWITCH
OAQ	OUTDOOR AIR QUALITY
OARH	OUTSIDE AIR RELATIVE HUMIDITY
OAT	OUTDOOR AIR TEMP. SENSOR
OFM	OUTDOOR FAN MOTOR
OFR	OUTDOOR FAN RELAY
OL	OVERLOAD
PL	PLUG ASSEMBLY
POT	POTENTIOMETER
PMR	PHASE MONITOR RELAY
QT	QUADRUPLE TERMINAL
RARH	RETURN AIR RELATIVE HUMIDITY
RAT	RETURN AIR TEMP. SENSOR
RDV	REHEAT DISCHARGE VALVE
RS	ROLLOUT SWITCH
SAT	SUPPLY AIR TEMP. SENSOR
SEN	SENSOR
SPRH	SPACE RELATIVE HUMIDITY
SPT	SPACE TEMPERATURE SENSOR
SPTO	SPACE TEMPERATURE OFFSET
STD	STANDARD
TB	TERMINAL BLOCK
TDR	TIME DELAY RELAY(WINTER START)
TRAN	TRANSFORMER
UCB	UNIT CONTROL BOARD

48TM005991 | C

Typical Control Wiring Diagram — 48GC 14 230/460/575-3-60 Unit with Electromechanical Control and POL224 Economizer

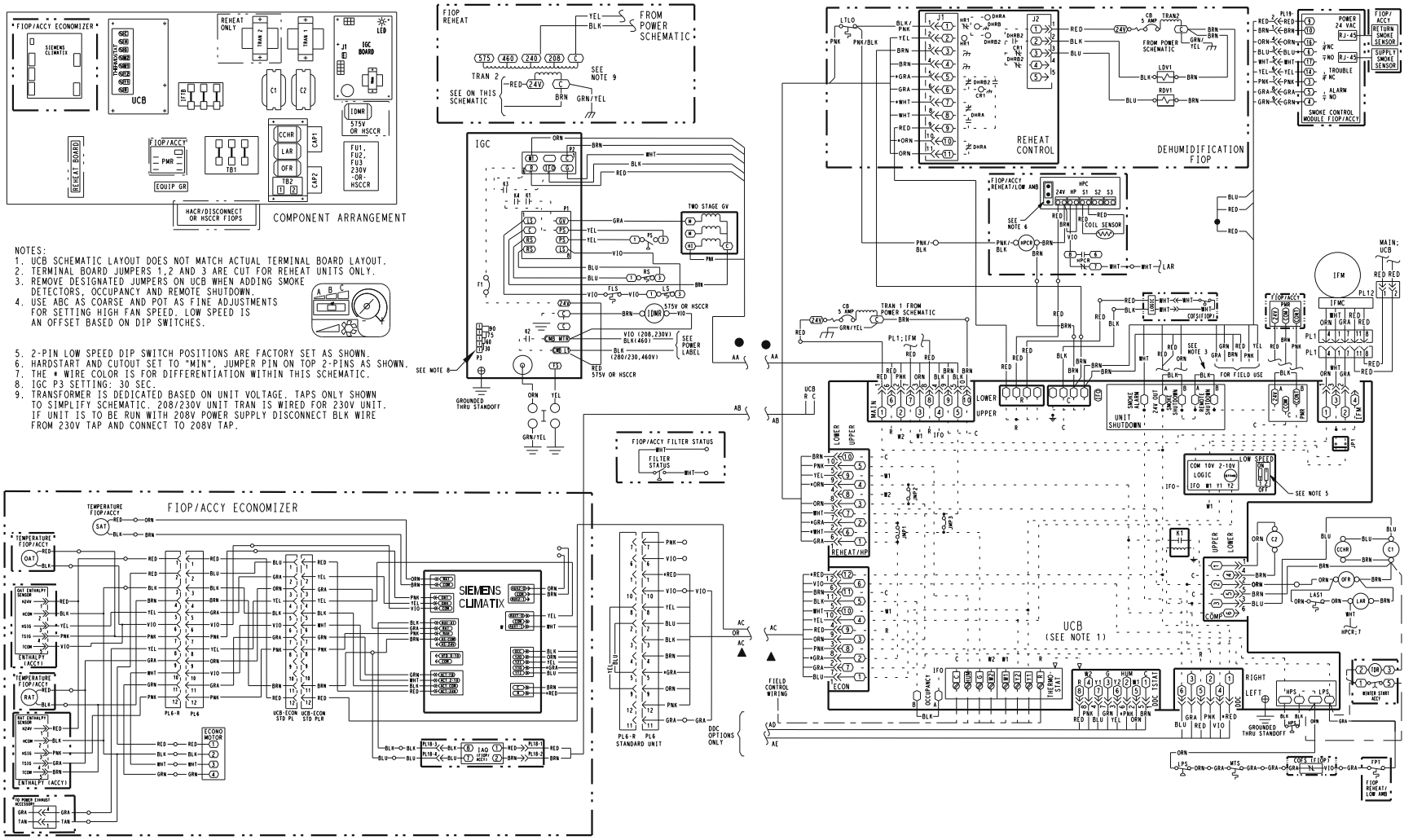

NOTES:
1. UCB SCHEMATIC LAYOUT DOES NOT MATCH ACTUAL TERMINAL BOARD LAYOUT.
2. TERMINAL BOARD JUMPERS 1,2 AND 3 ARE CUT FOR REHEAT UNITS ONLY.
3. REMOVE DESIGNATED JUMPERS ON UCB WHEN ADDING SMOKE DETECTORS, OCCUPANCY AND REMOTE SHUTDOWN.
4. USE ABC AS COARSE AND POT AS FINE ADJUSTMENTS FOR SETTING HIGH FAN SPEED. LOW SPEED IS AN OFFSET BASED ON DIP SWITCHES.
5. 2-PIN LOW SPEED DIP SWITCH POSITIONS ARE FACTORY SET AS SHOWN.
6. HARDSTART AND CUTOUT SET TO "MIN", JUMPER PIN ON TOP 2-PINS AS SHOWN.
7. THE * WIRE COLOR IS FOR DIFFERENTIATION WITHIN THIS SCHEMATIC.
8. IGC P3 SETTING: 30 SEC.
9. TRANSFORMER IS DEDICATED BASED ON UNIT VOLTAGE. TAPS ONLY SHOWN TO SIMPLIFY SCHEMATIC. 208/230V UNIT TRAN IS WIRED FOR 230V UNIT. IF UNIT IS TO BE RUN WITH 208V POWER SUPPLY DISCONNECT BLK WIRE FROM 230V TAP AND CONNECT TO 208V TAP.

Typical Control Wiring Diagram — 48GC 14 230/460/575-3-60 Unit with SystemVu™ Controller

NOTES:
1. LOW VOLTAGE CONNECTIONS MUST BE CLASS 2.
2. USB-B AT J4 AND ETHERNETS AT J13,J14 ARE SHOWN FOR FUTURE USE.
3. THE "Y3" TERMINAL IS CONFIGURABLE IN THE SOFTWARE.
4. HARDSTART AND CUTOUT SET TO "MIN", JUMPER PIN ON TOP 2-PINS AS SHOWN.
5. WHEN USING A RARH SENSOR,MAKE CONNECTION IN THE RETURN AIR SECTION. WHEN USING SPRH SENSOR, MAKE CONNECTION HERE BY DISCONNECTING YELLOW WIRE.
6. IGC P3 SETTING:30 SEC.
7. DISCONNECT VIO TO ALLOW POWER EXHAUST CONNECTION.
8. TRANSFORMER IS DEDICATED BASED ON UNIT VOLTAGE. TAPS ONLY SHOWN TO SIMPLIFY SCHEMATIC. 208/230V UNIT TRAN IS WIRED FOR 230V UNIT. IF UNIT IS TO BE RUN WITH 208V POWER SUPPLY DISCONNECT BLK WIRE FROM 230V TAP AND CONNECT TO 208V TAP.

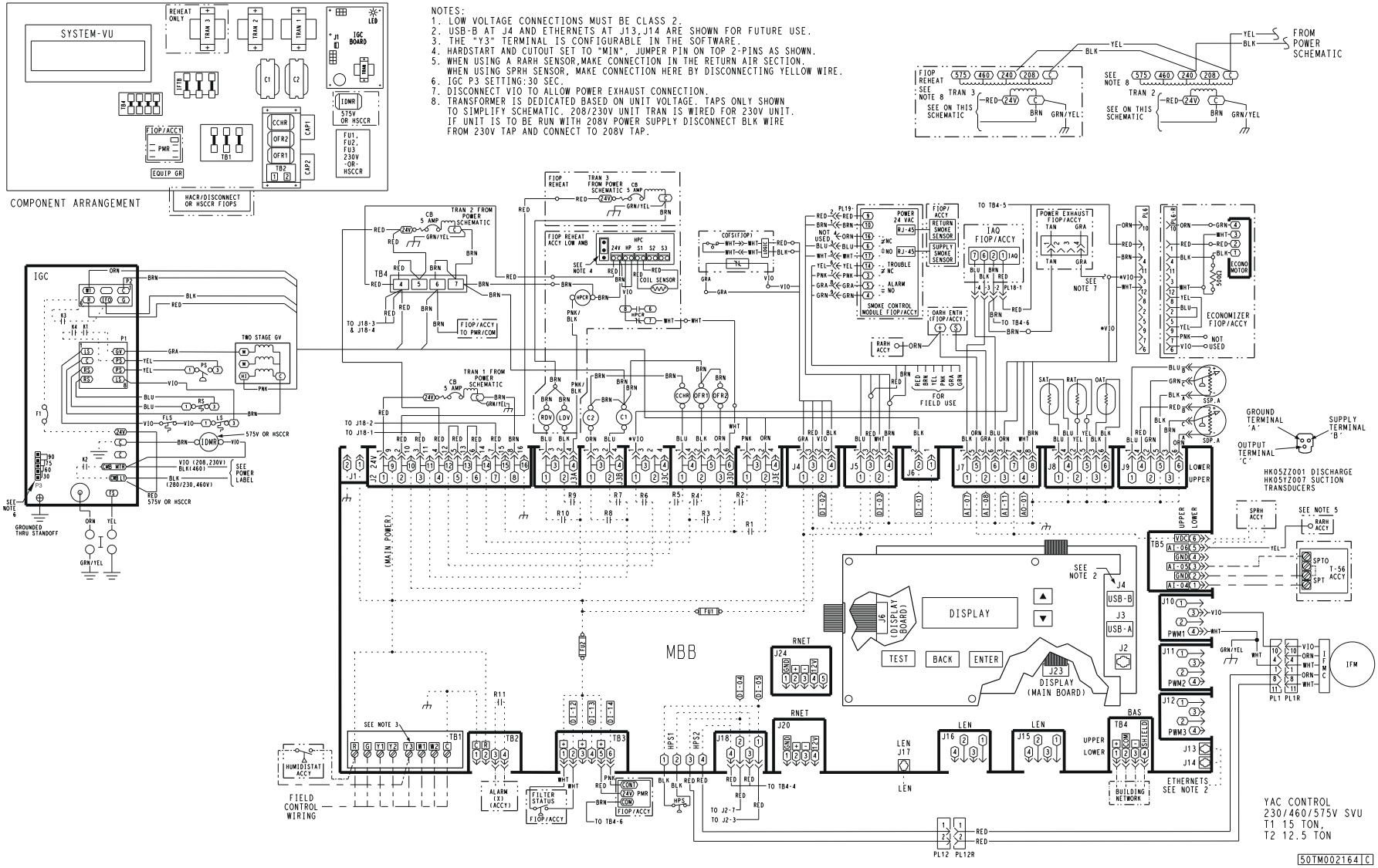

Typical Power Wiring Diagram — 48GC 14 208-230/460-3-60 Unit with Electromechanical or SystemVu™ Controllers

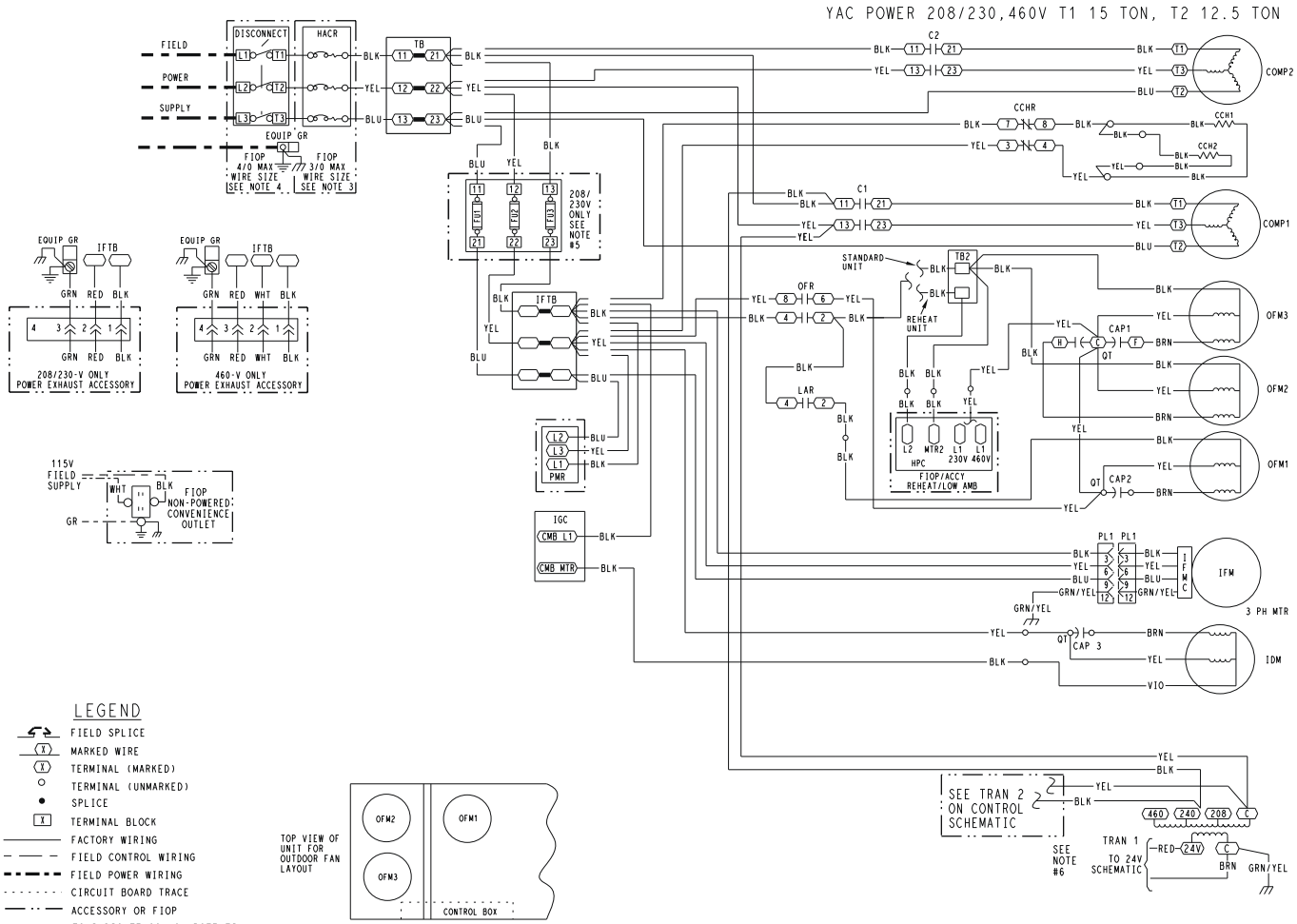

LEGEND

- FIELD SPLICE
- MARKED WIRE
- TERMINAL (MARKED)
- TERMINAL (UNMARKED)
- SPLICE
- TERMINAL BLOCK
- FACTORY WIRING
- FIELD CONTROL WIRING
- FIELD POWER WIRING
- CIRCUIT BOARD TRACE
- ACCESSORY OR FIOP
- TO INDICATE COMMON POTENTIAL ONLY: NOT TO REPRESENT WIRING

NOTES:
1. IF ANY OF THE ORIGINAL WIRE FURNISHED MUST BE REPLACED, IT MUST BE REPLACED WITH TYPE 90 C WIRE OR ITS EQUIVALENT.
2. COMPRESSOR AND FAN MOTORS ARE THERMALLY PROTECTED. THREE PHASE MOTORS ARE PROTECTED AGAINST PRIMARY SINGLE PHASING CONDITIONS.
3. USE COPPER, COPPER CLAD ALUMINUM OR ALUMINUM CONDUCTORS.
4. USE COPPER CONDUCTORS ONLY.
5. FU1, FU2, AND FU3, REPLACE WITH 250V 60A BUSSMAN FRNR 60.
6. TRANSFORMER IS DEDICATED BASED ON UNIT VOLTAGE. TAPS ONLY SHOWN TO SIMPLIFY SCHEMATIC. 208/230V UNIT TRAN IS WIRED FOR 230V UNIT. IF UNIT IS TO BE RUN WITH 208V POWER SUPPLY DISCONNECT BLK WIRE FROM 230V TAP AND CONNECT TO 200V TAP.

ACCY	ACCESSORY
AMB	AMBIENT
C	CONTACTOR,COMPRESSOR
CAP	CAPACITOR
CB	CIRCUIT BREAKER
CCH	CRANKCASE HEATER
CCHR	CRANKCASE HEATER RELAY
CMB	COMBUSTION
COFS	CONDENSATE OVERFLOW SW
COMP	COMPRESSOR MOTOR
DDC	DIRECT DIGITAL CONTROL
ERV	ENERGY RECOVERY VENTILATOR
FIOP	FACTORY INSTALLED OPTION
FLS	FAN LIMIT SWITCH
FPT	FREEZE PROTECTION THERMOSTAT
FSD	FIRE SHUT DOWN
FS	FLAME SENSOR
FU	FUSE
GND	GROUND
GVR	GAS VALVE RELAY
HPC	HEAD PRESSURE CONTROL
HPS	HIGH PRESSURE SWITCH
HS	HALL EFFECT SENSOR
I	IGNITOR
IAQ	INDOOR AIR QUALITY SENSORS
IDM	INDUCED DRAFT MOTOR
IFCB	INDOOR FAN CIRCUIT BREAKER
IFM	INDOOR FAN MOTOR
IFMC	INDOOR FAN CONTROLLER
IGC	INTEGRATED GAS CONTROL
JMP	JUMPER
LA	LOW AMBIENT
LAR	LOW AMBIENT RELAY
LDV	LIQUID DIVERTER VALVE
LPS	LOW PRESSURE SWITCH
LSM	LIMIT SWITCH (MANUAL RESET)
LS	LIMIT SWITCH
LTLO	LOW TEMPERATURE LOCKOUT
MGV	MAIN GAS VALVE
MOV	VOLTAGE RESTRICTOR
MTR	MOTOR
MTS	MIXED AIR TEMPERATURE SWITCH
OAQ	OUTDOOR AIR QUALITY
OARH	OUTSIDE AIR RELATIVE HUMIDITY
OAT	OUTDOOR AIR TEMP. SENSOR
OFM	OUTDOOR FAN MOTOR
OFR	OUTDOOR FAN RELAY
OL	OVERLOAD
PL	PLUG ASSEMBLY
POT	POTENTIOMETER
PMR	PHASE MONITOR RELAY
QT	QUADRUPLE TERMINAL
RARH	RETURN AIR RELATIVE HUMIDITY
RAT	RETURN AIR TEMP. SENSOR
RDV	REHEAT DISCHARGE VALVE
RS	ROLLOUT SWITCH
SAT	SUPPLY AIR TEMP. SENSOR
SEN	SENSOR
SPRH	SPACE RELATIVE HUMIDITY
SPT	SPACE TEMPERATURE SENSOR
SPTO	SPACE TEMPERATURE OFFSET
STD	STANDARD
TB	TERMINAL BLOCK
TDR	TIME DELAY RELAY (WINTER START)
TRAN	TRANSFORMER
UCB	UNIT CONTROL BOARD

50TM001914 C

Typical Power Wiring Diagram — 48GC 14 575-3-60 Unit with Electromechanical or SystemVu™ Controllers

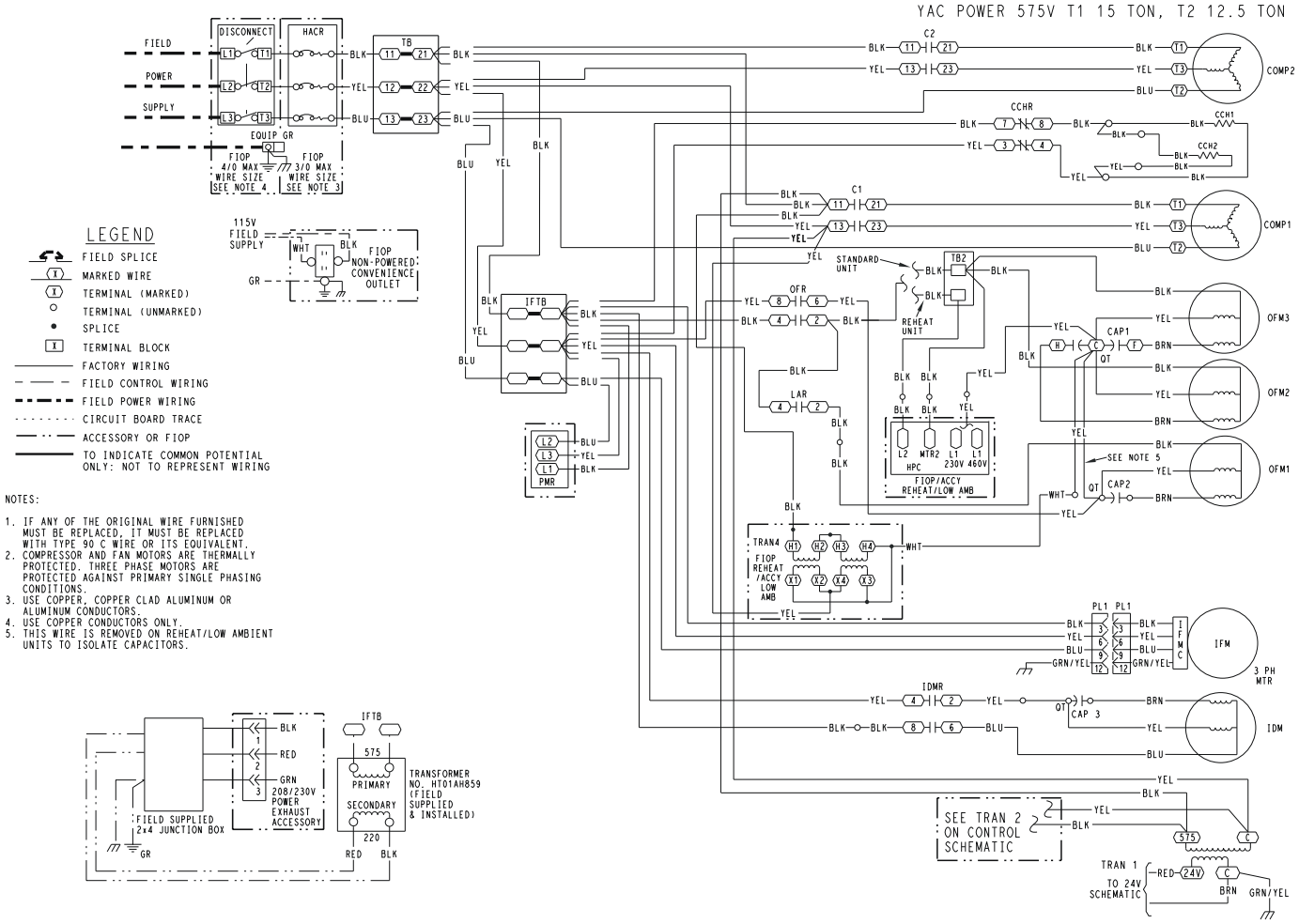

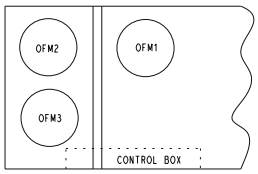

TOP VIEW OF UNIT FOR OUTDOOR FAN LAYOUT

ACCY	ACCESSORY
AMB	AMBIENT
C	CONTACTOR,COMPRESSOR
CAP	CAPACITOR
CB	CIRCUIT BREAKER
CCH	CRANKCASE HEATER
CCHR	CRANKCASE HEATER RELAY
CMB	COMBUSTION
COFS	CONDENSATE OVERFLOW SWT
COMP	COMPRESSOR MOTOR
DDC	DIRECT DIGITAL CONTROL
EHR	ELECTRIC HEATER RELAY
ERV	ENERGY RECOVERY VENTILATOR
FIOP	FACTORY INSTALLED OPTION
FLS	FAN LIMIT SWITCH
FPT	FREEZE PROTECTION THERMOSTAT
FSD	FIRE SHUT DOWN
FS	FLAME SENSOR
FU	FUSE
GND	GROUND
GVR	GAS VALVE RELAY
HPC	HEAD PRESSURE CONTROL
HPS	HIGH PRESSURE SWITCH
HS	HALL EFFECT SENSOR
I	IGNITOR
IAQ	INDOOR AIR QUALITY SENSORS
IDM	INDUCED DRAFT MOTOR
IFCB	INDOOR FAN CIRCUIT BREAKER
IFM	INDOOR FAN MOTOR
IFMC	INDOOR FAN CONTROLLER
IGC	INTEGRATED GAS CONTROL
IFTB	INDOOR FAN TERMINAL BLOCK
JMP	JUMPER
LA	LOW AMBIENT
LAR	LOW AMBIENT RELAY
LDV	LIQUID DIVERTER VALVE
LPS	LOW PRESSURE SWITCH
LSM	LIMIT SWITCH (MANUAL RESET)
LS	LIMIT SWITCH
LTLO	LOW TEMPERATURE LOCKOUT
MGV	MAIN GAS VALVE
MOV	VOLTAGE RESTRICTOR
MTR	MOTOR
MTS	MIXED AIR TEMPERATURE SWITCH
OAQ	OUTDOOR AIR QUALITY
OARH	OUTSIDE AIR RELATIVE HUMIDITY
OAT	OUTDOOR AIR TEMP. SENSOR
OFM	OUTDOOR FAN MOTOR
OFR	OUTDOOR FAN RELAY
OL	OVERLOAD
PL	PLUG ASSEMBLY
POT	POTENTIOMETER
PMR	PHASE MONITOR RELAY
QT	QUADRUPLE TERMINAL
RARH	RETURN AIR RELATIVE HUMIDITY
RAT	RETURN AIR TEMP. SENSOR
RDV	REHEAT DISCHARGE VALVE
RS	ROLLOUT SWITCH
RVSR	REVERSING VALVE SOLENOID RELAY
SAT	SUPPLY AIR TEMP. SENSOR
SEN	SENSOR
SPRH	SPACE RELATIVE HUMIDITY
SPT	SPACE TEMPERATURE SENSOR
SPTO	SPACE TEMPERATURE OFFSET
STD	STANDARD
TB	TERMINAL BLOCK
TBR	TEMPERATURE BYPASS RELAY
TDR	TIME DELAY RELAY(WINTER START)
TRAN	TRANSFORMER
UCB	UNIT CONTROL BOARD

50TM001916 C

Typical Control Wiring Diagram — 50GC 07-09 208-230/460/575-3-60 Unit with Electromechanical Control and POL224 Economizer

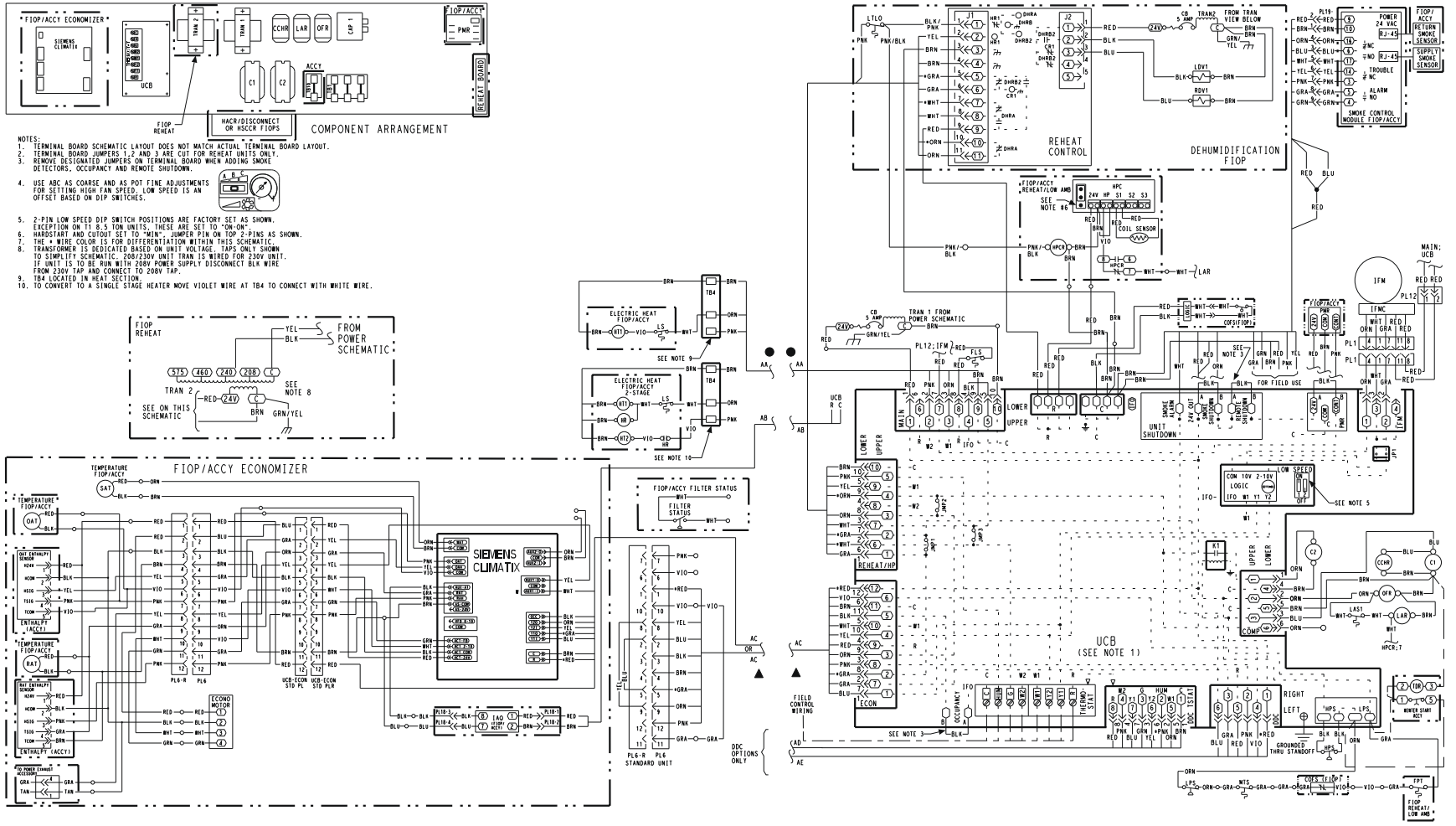

Typical Control Wiring Diagram — 50GC 08-09 208-230/460/575-3-60 Unit with SystemVu™ Controller

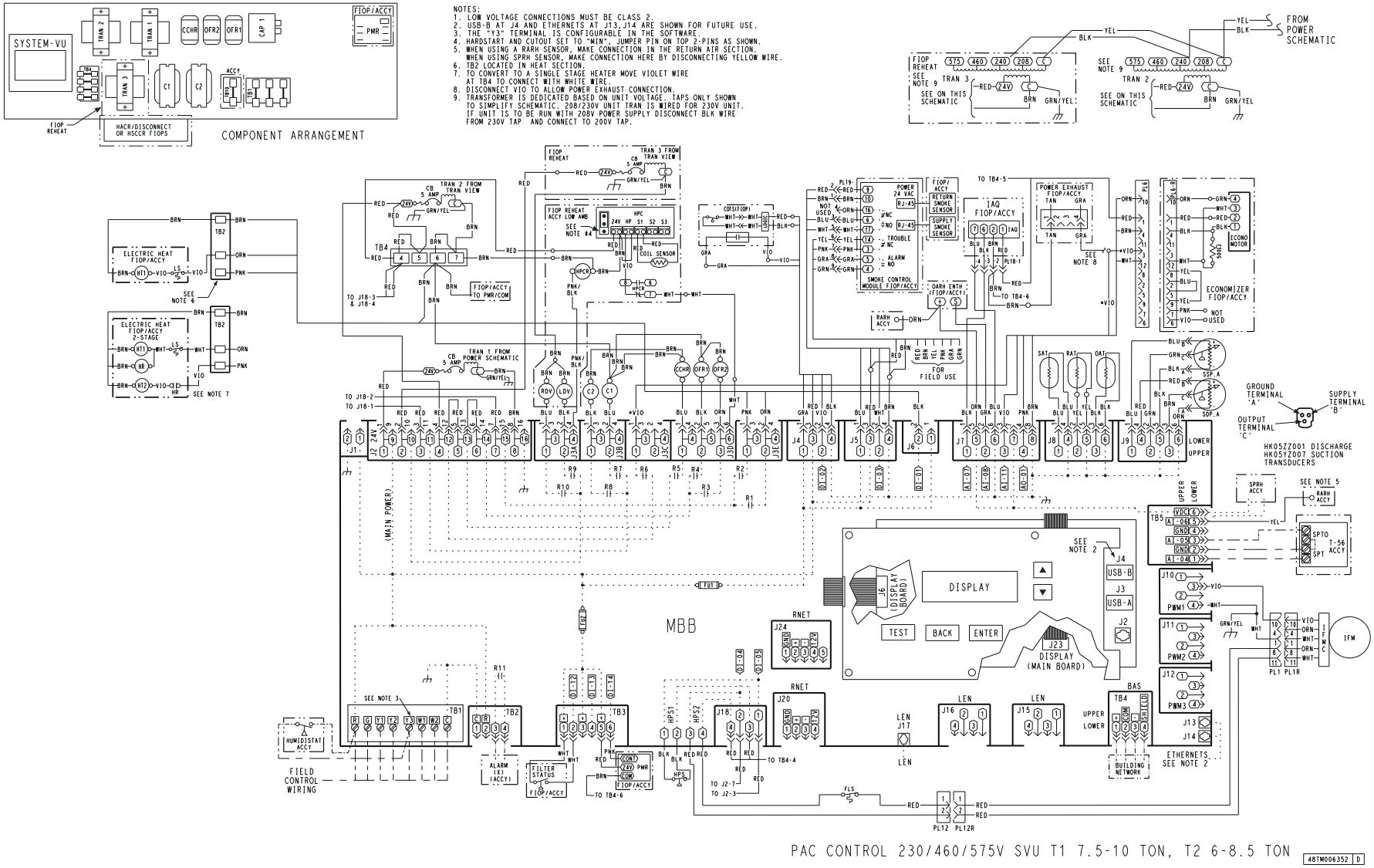

Typical Power Wiring Diagram — 50GC 08-09 208-230/460-3-60 Unit with Electromechanical or SystemVu™ Controllers

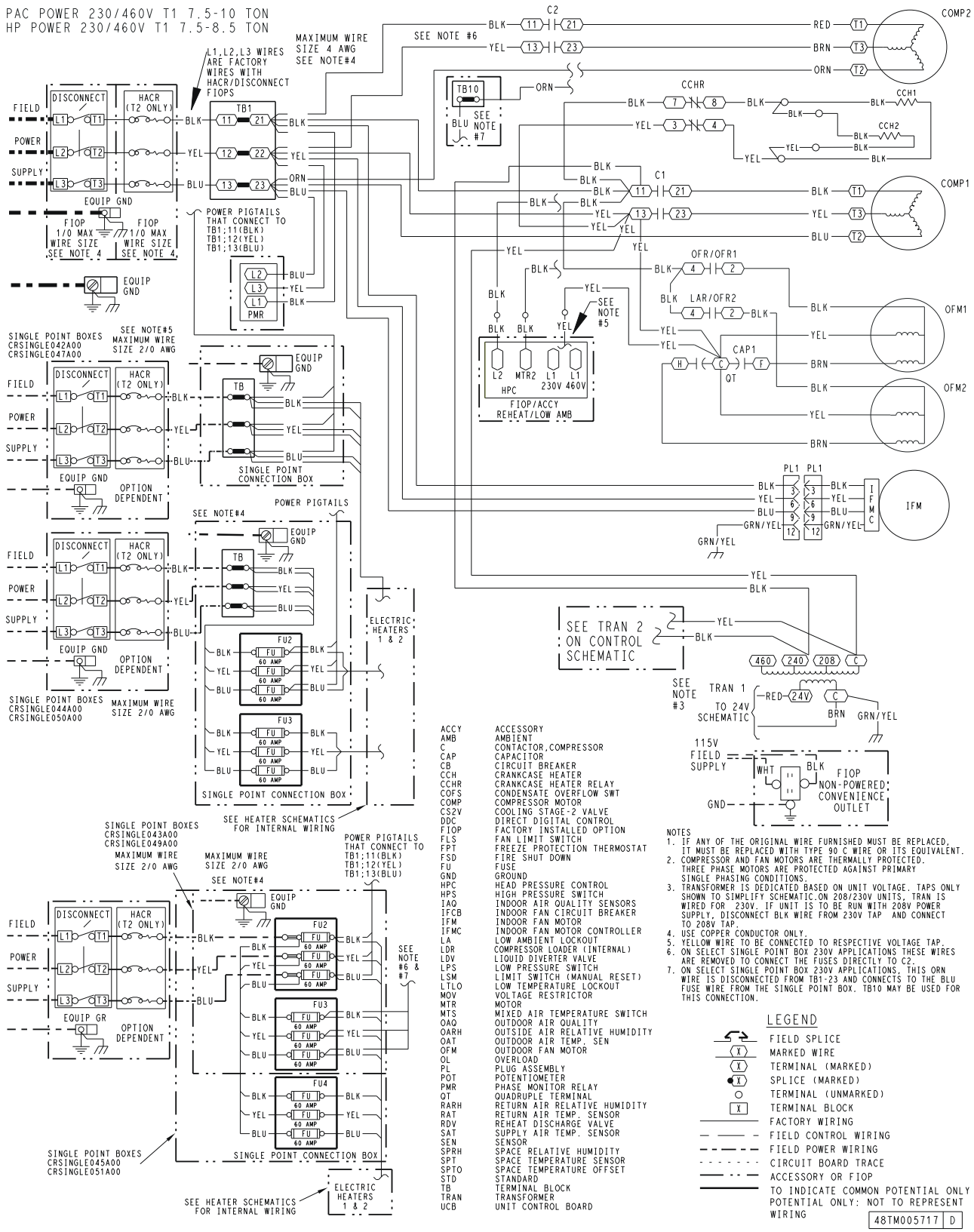

ACCY	ACCESSORY
AMB	AMBIENT
C	CONTACTOR,COMPRESSOR
CAP	CAPACITOR
CB	CIRCUIT BREAKER
CCH	CRANKCASE HEATER
CCHR	CRANKCASE HEATER RELAY
COFS	CONDENSATE OVERFLOW SWT
COMP	COMPRESSOR MOTOR
CSZV	COOLING STAGE-2 VALVE
DDC	DIRECT DIGITAL CONTROL
FIOP	FACTORY INSTALLED OPTION
FLS	FAN LIMIT SWITCH
FPT	FREEZE PROTECTION THERMOSTAT
FSD	FIRE SHUT DOWN
FU	FUSE
GND	GROUND
HPC	HEAD PRESSURE CONTROL
HPS	HIGH PRESSURE SWITCH
IAQ	INDOOR AIR QUALITY SENSORS
IFCB	INDOOR FAN CIRCUIT BREAKER
IFM	INDOOR FAN MOTOR
IFMC	INDOOR FAN MOTOR CONTROLLER
LA	LOW AMBIENT LOCKOUT
LDR	COMPRESSOR LOADER (INTERNAL)
LDV	LIQUID DIVERTER VALVE
LPS	LOW PRESSURE SWITCH
LSM	LIMIT SWITCH (MANUAL RESET)
LTLO	LOW TEMPERATURE LOCKOUT
MOV	VOLTAGE RESTRICTOR
MTR	MOTOR
MTS	MIXED AIR TEMPERATURE SWITCH
OAQ	OUTDOOR AIR QUALITY
OARH	OUTSIDE AIR RELATIVE HUMIDITY
OAT	OUTDOOR AIR TEMP. SEN
OFM	OUTDOOR FAN MOTOR
OL	OVERLOAD
PL	PLUG ASSEMBLY
POT	POTENTIOMETER
PMR	PHASE MONITOR RELAY
QT	QUADRUPLE TERMINAL
RARH	RETURN AIR RELATIVE HUMIDITY
RAT	RETURN AIR TEMP. SENSOR
RDV	REHEAT DISCHARGE VALVE
SAT	SUPPLY AIR TEMP. SENSOR
SEN	SENSOR
SPRH	SPACE RELATIVE HUMIDITY
SPT	SPACE TEMPERATURE SENSOR
SPTO	SPACE TEMPERATURE OFFSET
STD	STANDARD
TB	TERMINAL BLOCK
TRAN	TRANSFORMER
UCB	UNIT CONTROL BOARD

NOTES
1. IF ANY OF THE ORIGINAL WIRE FURNISHED MUST BE REPLACED, IT MUST BE REPLACED WITH TYPE 90 C WIRE OR ITS EQUIVALENT.
2. COMPRESSOR AND FAN MOTORS ARE THERMALLY PROTECTED. THREE PHASE MOTORS ARE PROTECTED AGAINST PRIMARY SINGLE PHASING CONDITIONS.
3. TRANSFORMER IS DEDICATED BASED ON UNIT VOLTAGE. TAPS ONLY SHOWN TO SIMPLIFY SCHEMATIC.ON 208/230V UNITS, TRAN IS WIRED FOR 230V. IF UNIT IS TO BE RUN WITH 208V POWER SUPPLY, DISCONNECT BLK WIRE FROM 230V TAP AND CONNECT TO 208V TAP.
4. USE COPPER CONDUCTOR ONLY.
5. YELLOW WIRE TO BE CONNECTED TO RESPECTIVE VOLTAGE TAP.
6. ON SELECT SINGLE POINT BOX 230V APPLICATIONS THESE WIRES ARE REMOVED TO CONNECT THE FUSES DIRECTLY TO C2.
7. ON SELECT SINGLE POINT BOX 230V APPLICATIONS, THIS ORN WIRE IS DISCONNECTED FROM TB1-23 AND CONNECTS TO THE BLU FUSE WIRE FROM THE SINGLE POINT BOX. TB10 MAY BE USED FOR THIS CONNECTION.

LEGEND

	FIELD SPLICE
X	MARKED WIRE
X	TERMINAL (MARKED)
X	SPLICE (MARKED)
	TERMINAL (UNMARKED)
X	TERMINAL BLOCK
	FACTORY WIRING
	FIELD CONTROL WIRING
	FIELD POWER WIRING
	CIRCUIT BOARD TRACE
	ACCESSORY OR FIOP
	TO INDICATE COMMON POTENTIAL ONLY POTENTIAL ONLY: NOT TO REPRESENT WIRING

48TM005717 D

Typical Control Wiring Diagram — 50GC 12 208-230/460/575-3-60 Unit with Electromechanical Control and POL224 Economizer

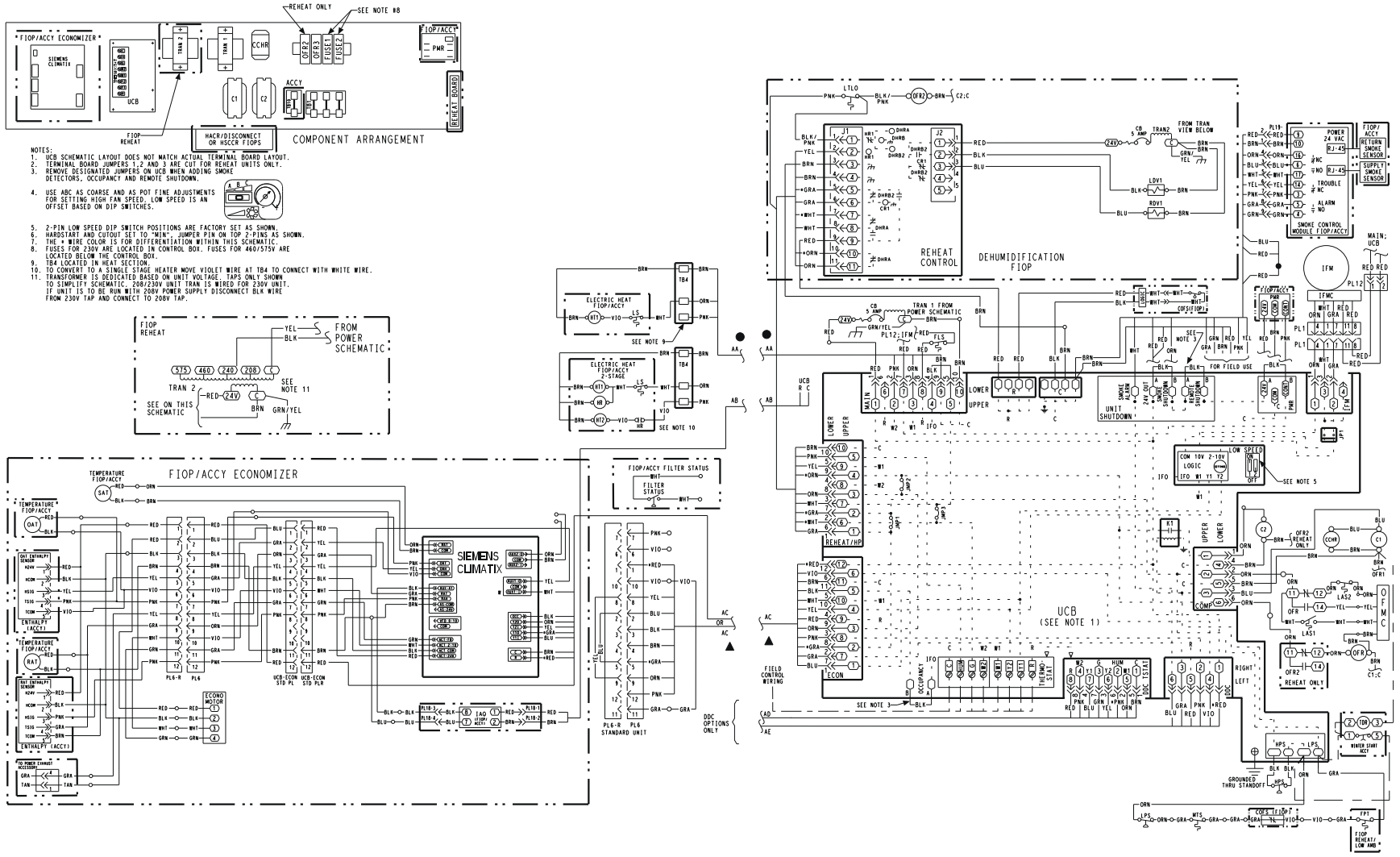

Typical Power Wiring Diagram — 50GC 12 208-230/3/60 Unit with Electromechanical Controller

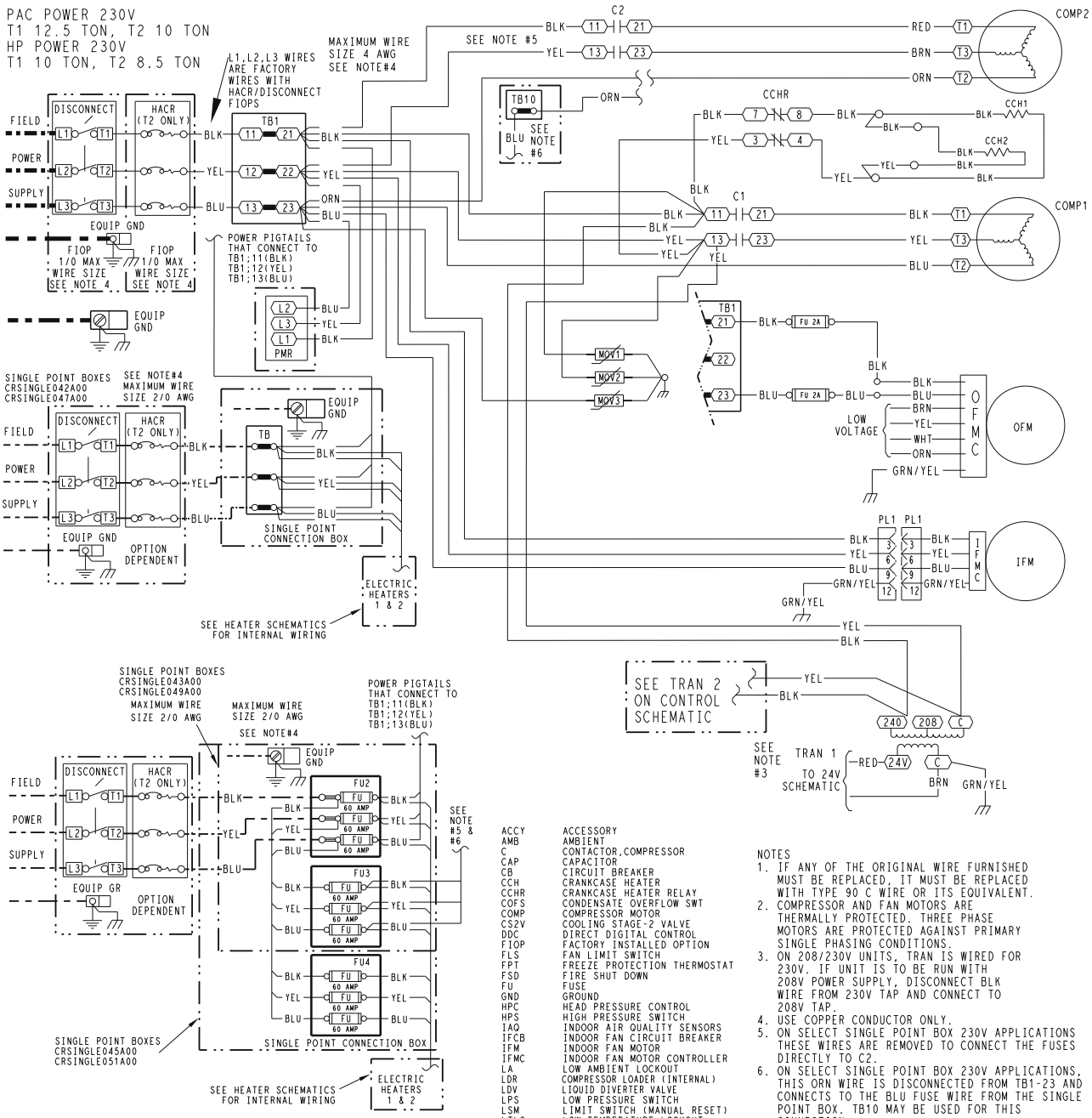

ACCY	ACCESSORY
AMB	AMBIENT
C	CONTACTOR,COMPRESSOR
CAP	CAPACITOR
CB	CIRCUIT BREAKER
CCH	CRANKCASE HEATER
CCHR	CRANKCASE HEATER RELAY
COFS	CONDENSATE OVERFLOW SWT
COMP	COMPRESSOR MOTOR
CS2V	COOLING STAGE-2 VALVE
DDC	DIRECT DIGITAL CONTROL
FIOP	FACTORY INSTALLED OPTION
FLS	FAN LIMIT SWITCH
FPT	FREEZE PROTECTION THERMOSTAT
FSD	FIRE SHUT DOWN
FU	FUSE
GND	GROUND
HPC	HEAD PRESSURE CONTROL
HPS	HIGH PRESSURE SWITCH
IAQ	INDOOR AIR QUALITY SENSORS
IFCB	INDOOR FAN CIRCUIT BREAKER
IFM	INDOOR FAN MOTOR
IFMC	INDOOR FAN MOTOR CONTROLLER
LA	LOW AMBIENT LOCKOUT
LDR	COMPRESSOR LOADER (INTERNAL)
LDV	LIQUID DIVERTER VALVE
LPS	LOW PRESSURE SWITCH
LSM	LIMIT SWITCH (MANUAL RESET)
LTLO	LOW TEMPERATURE LOCKOUT
MOV	VOLTAGE RESTRICTOR
MTR	MOTOR
MTS	MIXED AIR TEMPERATURE SWITCH
OAQ	OUTDOOR AIR QUALITY
OARH	OUTSIDE AIR RELATIVE HUMIDITY
OAT	OUTDOOR AIR TEMP. SEN
OFM	OUTDOOR FAN MOTOR
OL	OVERLOAD
PL	PLUG ASSEMBLY
POT	POTENTIOMETER
PMR	PHASE MONITOR RELAY
QT	QUADRUPLE TERMINAL
RARH	RETURN AIR RELATIVE HUMIDITY
RAT	RETURN AIR TEMP. SENSOR
RDV	REHEAT DISCHARGE VALVE
SAT	SUPPLY AIR TEMP. SENSOR
SEN	SENSOR
SPRH	SPACE RELATIVE HUMIDITY
SPT	SPACE TEMPERATURE SENSOR
SPTO	SPACE TEMPERATURE OFFSET
STD	STANDARD
TB	TERMINAL BLOCK
TRAN	TRANSFORMER
UCB	UNIT CONTROL BOARD

NOTES
1. IF ANY OF THE ORIGINAL WIRE FURNISHED MUST BE REPLACED, IT MUST BE REPLACED WITH TYPE 90 C WIRE OR ITS EQUIVALENT.
2. COMPRESSOR AND FAN MOTORS ARE THERMALLY PROTECTED. THREE PHASE MOTORS ARE PROTECTED AGAINST PRIMARY SINGLE PHASING CONDITIONS.
3. ON 208/230V UNITS, TRAN IS WIRED FOR 230V. IF UNIT IS TO BE RUN WITH 208V POWER SUPPLY, DISCONNECT BLK WIRE FROM 230V TAP AND CONNECT TO 208V TAP.
4. USE COPPER CONDUCTOR ONLY.
5. ON SELECT SINGLE POINT BOX 230V APPLICATIONS THESE WIRES ARE REMOVED TO CONNECT THE FUSES DIRECTLY TO C2.
6. ON SELECT SINGLE POINT BOX 230V APPLICATIONS, THIS ORN WIRE IS DISCONNECTED FROM TB1-23 AND CONNECTS TO THE BLU FUSE WIRE FROM THE SINGLE POINT BOX. TB10 MAY BE USED FOR THIS CONNECTION.

LEGEND

	FIELD SPLICE
X	MARKED WIRE
X	TERMINAL (MARKED)
X	SPLICE (MARKED)
	TERMINAL (UNMARKED)
X	TERMINAL BLOCK
	FACTORY WIRING
	FIELD CONTROL WIRING
	FIELD POWER WIRING
	CIRCUIT BOARD TRACE
	ACCESSORY OR FIOP
	TO INDICATE COMMON POTENTIAL ONLY POTENTIAL ONLY: NOT TO REPRSENT WIRING

48TM005988 D

Typical Control Wiring Diagram — 50GC 14 230/460/575-3-60 Unit with Electromechanical Control and POL224 Economizer

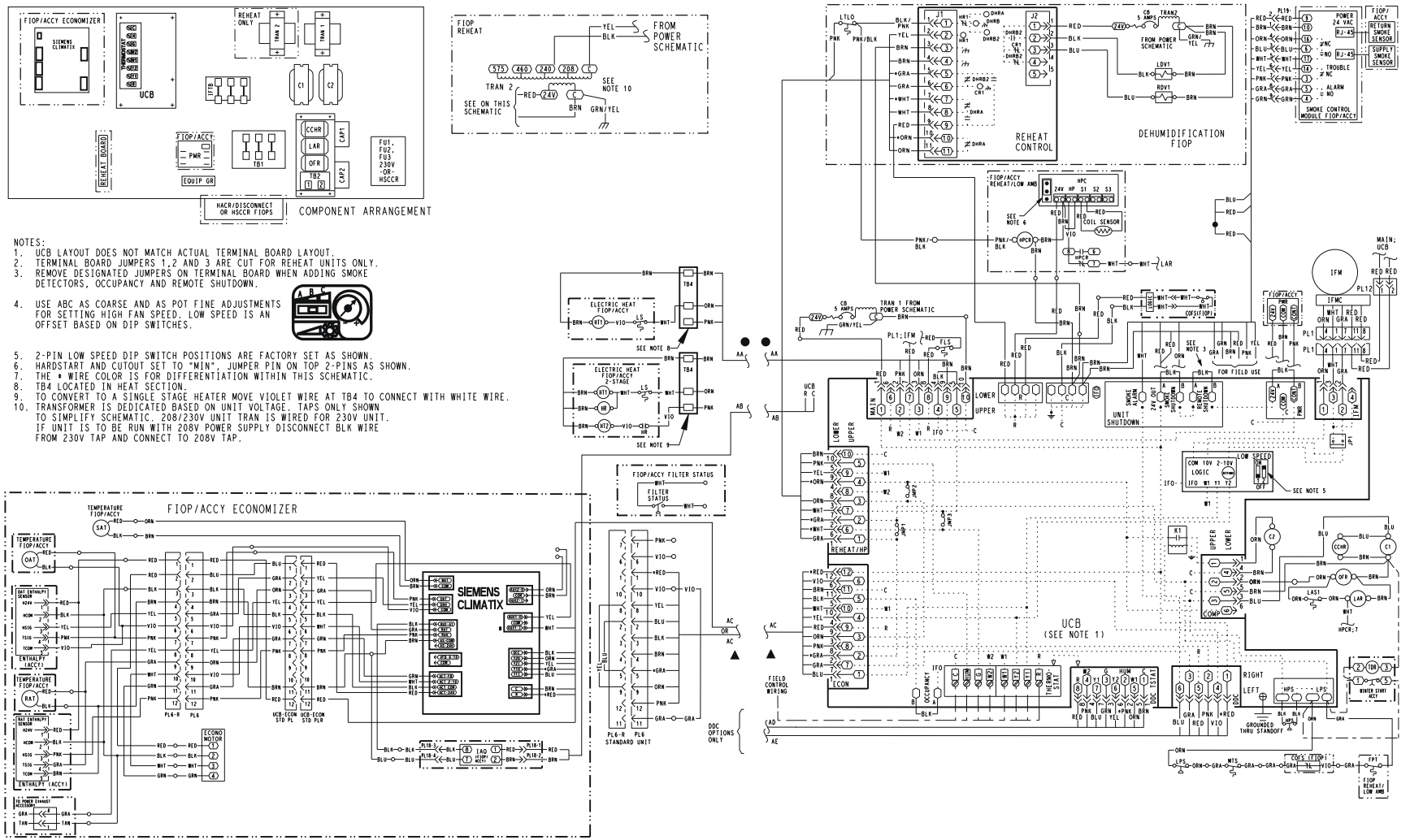

NOTES:
1. UCB LAYOUT DOES NOT MATCH ACTUAL TERMINAL BOARD LAYOUT.
2. TERMINAL BOARD JUMPERS 1,2 AND 3 ARE CUT FOR REHEAT UNITS ONLY.
3. REMOVE DESIGNATED JUMPERS ON TERMINAL BOARD WHEN ADDING SMOKE DETECTORS, OCCUPANCY AND REMOTE SHUTDOWN.
4. USE ABC AS COARSE AND AS POT FINE ADJUSTMENTS FOR SETTING HIGH FAN SPEED. LOW SPEED IS AN OFFSET BASED ON DIP SWITCHES.
5. 2-PIN LOW SPEED DIP SWITCH POSITIONS ARE FACTORY SET AS SHOWN.
6. HARDSTART AND CUTOUT SET TO "MIN", JUMPER PIN ON TOP 2-PINS AS SHOWN.
7. THE * WIRE COLOR IS FOR DIFFERENTIATION WITHIN THIS SCHEMATIC.
8. TB4 LOCATED IN HEAT SECTION.
9. TO CONVERT TO A SINGLE STAGE HEATER MOVE VIOLET WIRE AT TB4 TO CONNECT WITH WHITE WIRE.
10. TRANSFORMER IS DEDICATED BASED ON UNIT VOLTAGE. TAPS ONLY SHOWN TO SIMPLIFY SCHEMATIC. 208/230V UNIT TRAN IS WIRED FOR 230V UNIT. IF UNIT IS TO BE RUN WITH 208V POWER SUPPLY DISCONNECT BLK WIRE FROM 230V TAP AND CONNECT TO 208V TAP.

Typical Control Wiring Diagram — 50GC 14 230/460/575-3-60 Unit with SystemVu™ Controller

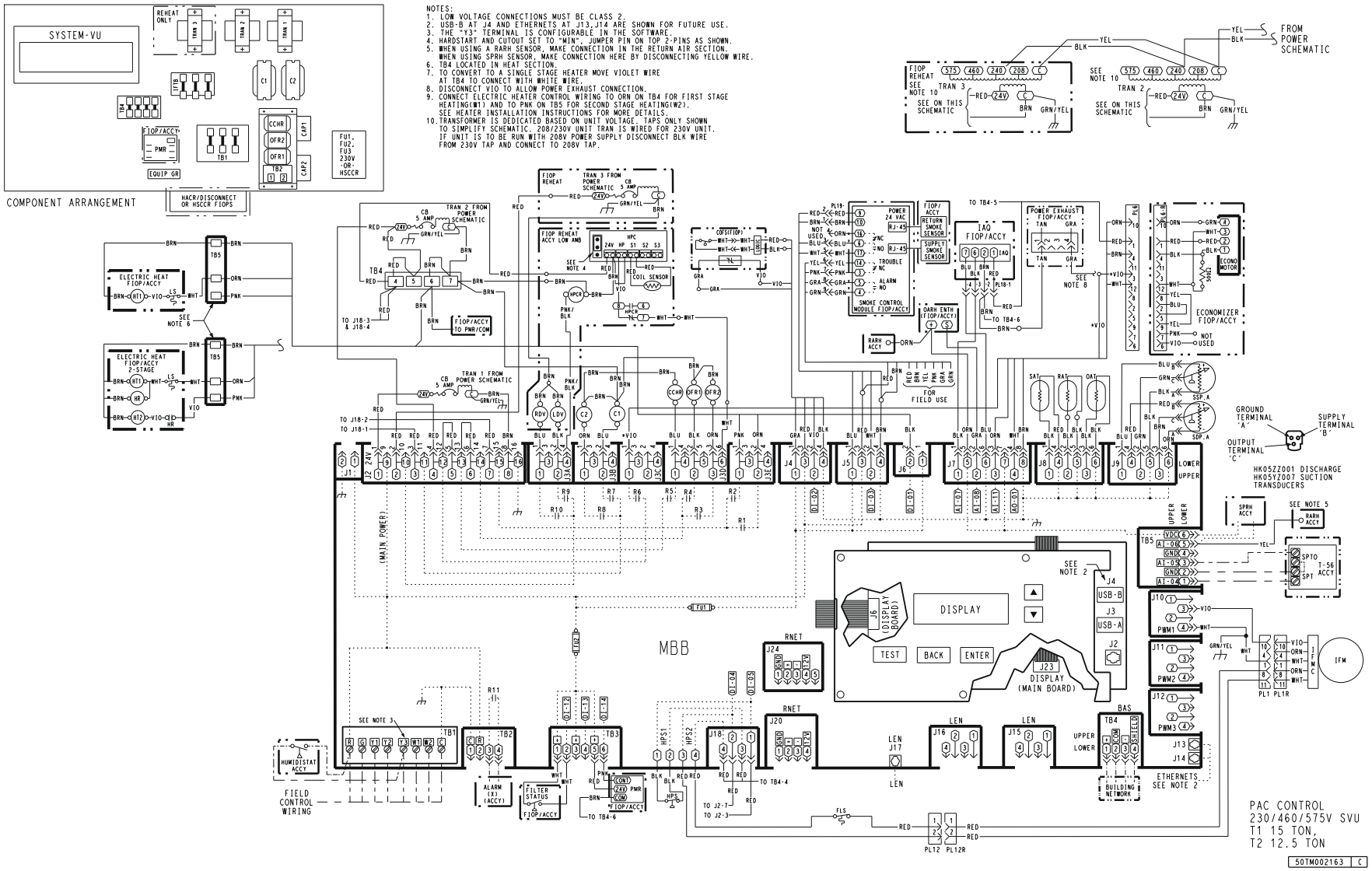

Typical Power Wiring Diagram — 50GC 14 208-230/460-3-60 Unit with Electromechanical or SystemVu™ Controllers

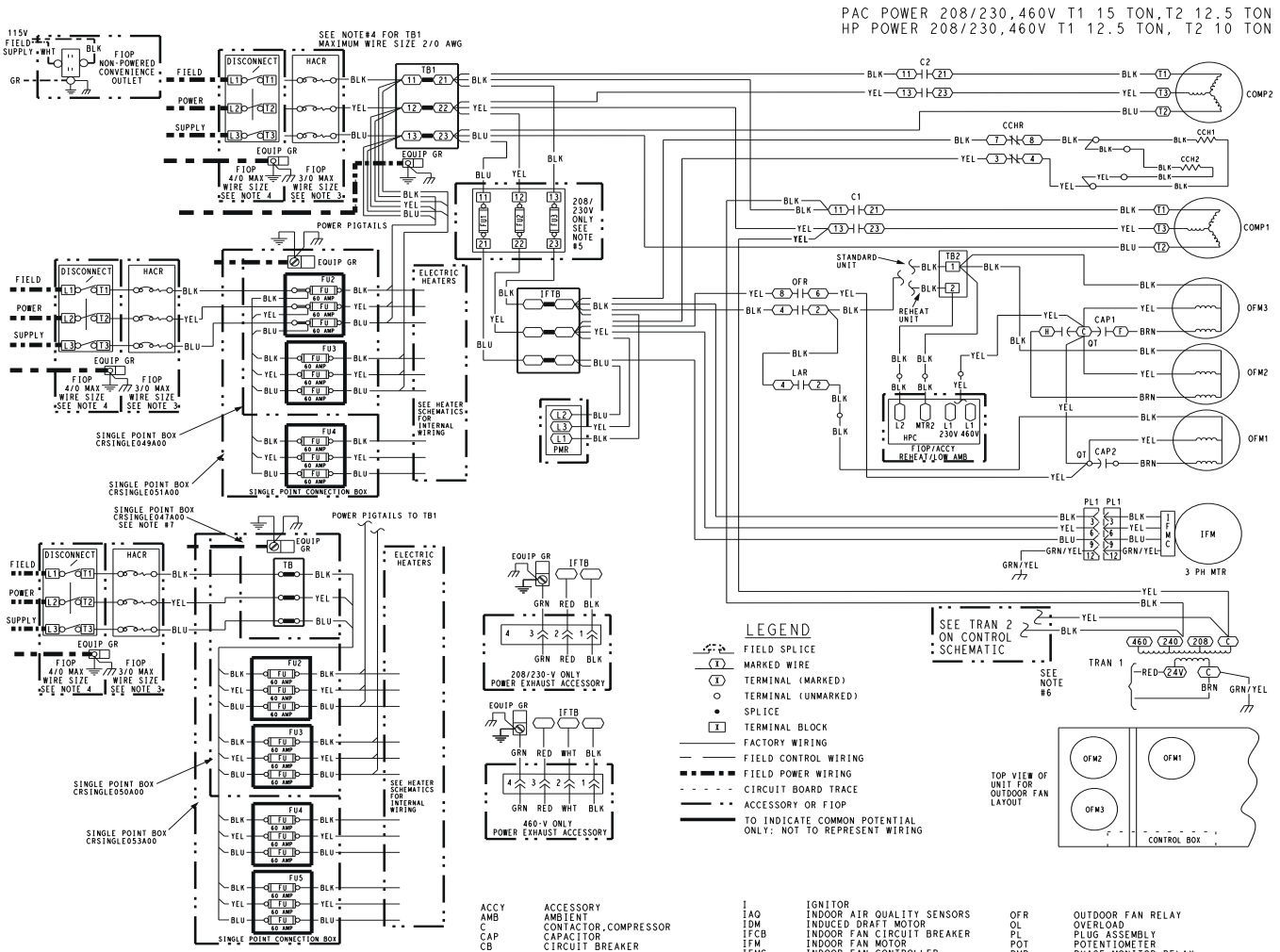

NOTES:
1. IF ANY OF THE ORIGINAL WIRE FURNISHED MUST BE REPLACED, IT MUST BE REPLACED WITH TYPE 90 C WIRE OR ITS EQUIVALENT.
2. COMPRESSOR AND FAN MOTORS ARE THERMALLY PROTECTED. THREE PHASE MOTORS ARE PROTECTED AGAINST PRIMARY SINGLE PHASING CONDITIONS.
3. USE COPPER, COPPER CLAD ALUMINUM OR ALUMINUM CONDUCTORS.
4. USE COPPER CONDUCTORS ONLY.
5. FU1, FU2, AND FU3, REPLACE WITH 250V 60A BUSSMAN FRNR 60.
6. TRANSFORMER IS DEDICATED BASED ON UNIT VOLTAGE. TAPS ONLY SHOWN TO SIMPLIFY SCHEMATIC. 208/230V UNIT TRAN IS WIRED FOR 230V UNIT. IF UNIT IS TO BE RUN WITH 208V POWER SUPPLY DISCONNECT BLK WIRE FROM 230V TAP AND CONNECT TO 200V TAP.
7. CRSINGLE047A00 IS ONLY A TERMINAL BLOCK TO DISTRIBUTE POWER TO THE CONTROL BOX TB1 AND ELECTRIC HEATERS.

ACCY	ACCESSORY
AMB	AMBIENT
C	CONTACTOR,COMPRESSOR
CAP	CAPACITOR
CB	CIRCUIT BREAKER
CCH	CRANKCASE HEATER
CCHR	CRANKCASE HEATER RELAY
CMB	COMBUSTION
COFS	CONDENSATE OVERFLOW SWT
COMP	COMPRESSOR MOTOR
DDC	DIRECT DIGITAL CONTROL
EHR	ELECTRIC HEATER RELAY
ERV	ENERGY RECOVERY VENTILATOR
FIOP	FACTORY INSTALLED OPTION
FLS	FAN LIMIT SWITCH
FPT	FREEZE PROTECTION THERMOSTAT
FSD	FIRE SHUT DOWN
FS	FLAME SENSOR
FU	FUSE
GND	GROUND
GVR	GAS VALVE RELAY
HPC	HEAD PRESSURE CONTROL
HPS	HIGH PRESSURE SWITCH
HS	HALL EFFECT SENSOR
I	IGNITOR
IAQ	INDOOR AIR QUALITY SENSORS
IDM	INDUCED DRAFT MOTOR
IFCB	INDOOR FAN CIRCUIT BREAKER
IFM	INDOOR FAN MOTOR
IFMC	INDOOR FAN CONTROLLER
IGC	INTEGRATED GAS CONTROL
IFTB	INDOOR FAN TERMINAL BLOCK
JMP	JUMPER
LA	LOW AMBIENT
LAR	LOW AMBIENT RELAY
LDV	LIQUID DIVERTER VALVE
LPS	LOW PRESSURE SWITCH
LSM	LIMIT SWITCH (MANUAL RESET)
LS	LIMIT SWITCH
LTLO	LOW TEMPERATURE LOCKOUT
MGV	MAIN GAS VALVE
MOV	VOLTAGE RESTRICTOR
MTR	MOTOR
MTS	MIXED AIR TEMPERATURE SWITCH
OAQ	OUTDOOR AIR QUALITY
OARH	OUTSIDE AIR RELATIVE HUMIDITY
OAT	OUTDOOR AIR TEMP. SENSOR
OFM	OUTDOOR FAN MOTOR
OFR	OUTDOOR FAN RELAY
OL	OVERLOAD
PL	PLUG ASSEMBLY
POT	POTENTIOMETER
PMR	PHASE MONITOR RELAY
QT	QUADRUPLE TERMINAL
RARH	RETURN AIR RELATIVE HUMIDITY
RAT	RETURN AIR TEMP. SENSOR
RDV	REHEAT DISCHARGE VALVE
RS	ROLLOUT SWITCH
RVSR	REVERSING VALVE SOLENOID RELAY
SAT	SUPPLY AIR TEMP. SENSOR
SEN	SENSOR
SPRH	SPACE RELATIVE HUMIDITY
SPT	SPACE TEMPERATURE SENSOR
SPTO	SPACE TEMPERATURE OFFSET
STD	STANDARD
TB	TERMINAL BLOCK
TBR	TEMPERATURE BYPASS RELAY
TDR	TIME DELAY RELAY(WINTER START)
TRAN	TRANSFORMER
UCB	UNIT CONTROL BOARD

50TM001913 D

Typical Power Wiring Diagram — 50GC 14 575-3-60 Unit with Electromechanical or SystemVu™ Controllers

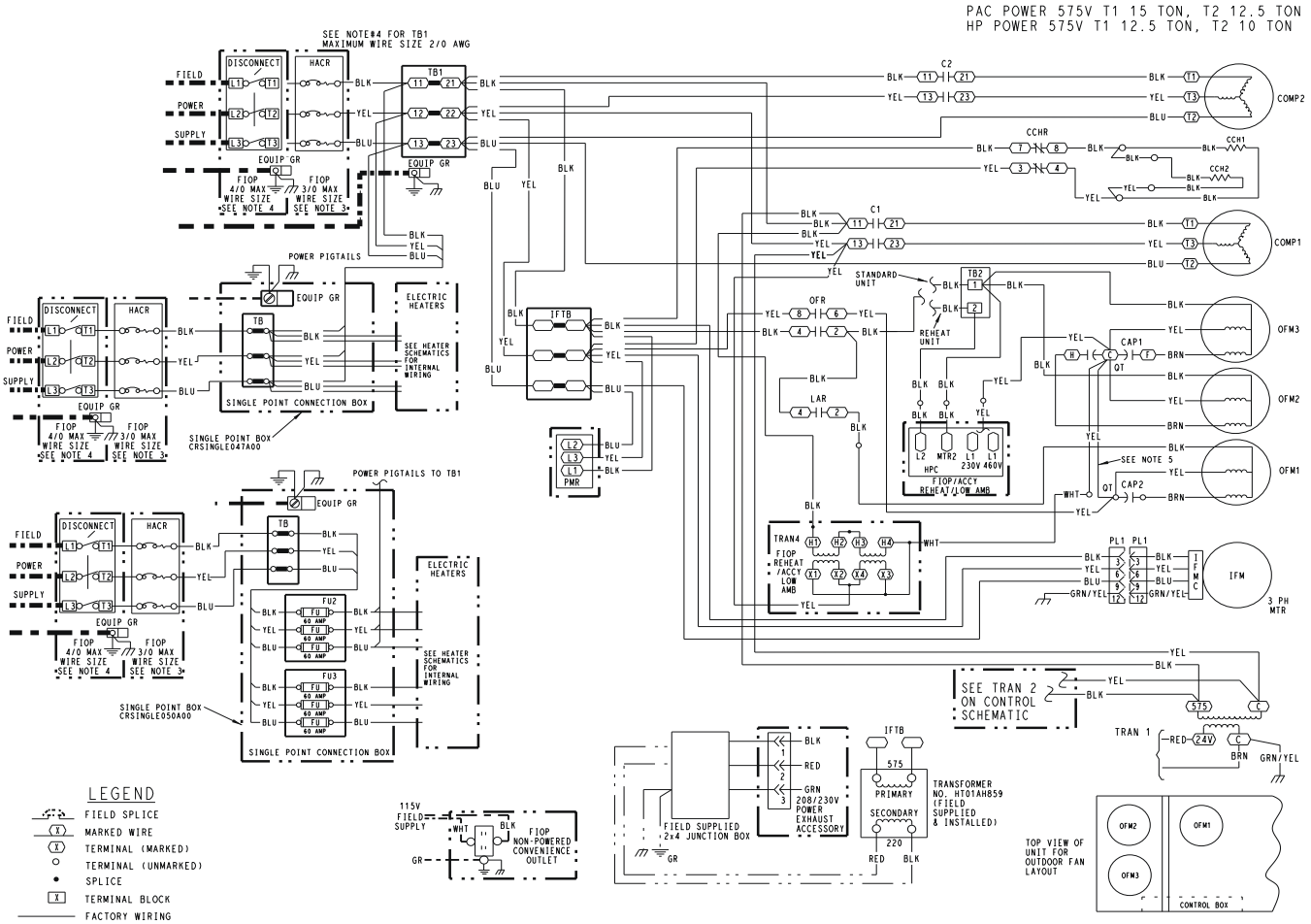

LEGEND

- FIELD SPLICE
- MARKED WIRE
- TERMINAL (MARKED)
- TERMINAL (UNMARKED)
- SPLICE
- TERMINAL BLOCK
- FACTORY WIRING
- FIELD CONTROL WIRING
- FIELD POWER WIRING
- CIRCUIT BOARD TRACE
- ACCESSORY OR FIOP
- TO INDICATE COMMON POTENTIAL ONLY: NOT TO REPRESENT WIRING

NOTES:

1. IF ANY OF THE ORIGINAL WIRE FURNISHED MUST BE REPLACED, IT MUST BE REPLACED WITH TYPE 90 C WIRE OR ITS EQUIVALENT.
2. COMPRESSOR AND FAN MOTORS ARE THERMALLY PROTECTED. THREE PHASE MOTORS ARE PROTECTED AGAINST PRIMARY SINGLE PHASING CONDITIONS.
3. USE COPPER, COPPER CLAD ALUMINUM OR ALUMINUM CONDUCTORS.
4. USE COPPER CONDUCTORS ONLY.
5. THIS WIRE IS REMOVED ON REHEAT/LOW AMBIENT UNITS TO ISOLATE CAPACITORS.

ACCY	ACCESSORY
AMB	AMBIENT
C	CONTACTOR,COMPRESSOR
CAP	CAPACITOR
CB	CIRCUIT BREAKER
CCH	CRANKCASE HEATER
CCHR	CRANKCASE HEATER RELAY
CMB	COMBUSTION
COFS	CONDENSATE OVERFLOW SWT
COMP	COMPRESSOR MOTOR
DDC	DIRECT DIGITAL CONTROL
EHR	ELECTRIC HEATER RELAY
ERV	ENERGY RECOVERY VENTILATOR
FIOP	FACTORY INSTALLED OPTION
FLS	FAN LIMIT SWITCH
FPT	FREEZE PROTECTION THERMOSTAT
FSD	FIRE SHUT DOWN
FS	FLAME SENSOR
FU	FUSE
GND	GROUND
GVR	GAS VALVE RELAY
HPC	HEAD PRESSURE CONTROL
HPS	HIGH PRESSURE SWITCH
HS	HALL EFFECT SENSOR
I	IGNITOR
IAQ	INDOOR AIR QUALITY SENSORS
IDM	INDUCED DRAFT MOTOR
IFCB	INDOOR FAN CIRCUIT BREAKER
IFM	INDOOR FAN MOTOR
IFMC	INDOOR FAN CONTROLLER
IGC	INTEGRATED GAS CONTROL
IFTB	INDOOR FAN TERMINAL BLOCK
JMP	JUMPER
LA	LOW AMBIENT
LAR	LOW AMBIENT RELAY
LDV	LIQUID DIVERTER VALVE
LPS	LOW PRESSURE SWITCH
LSM	LIMIT SWITCH (MANUAL RESET)
LS	LIMIT SWITCH
LTLO	LOW TEMPERATURE LOCKOUT
MGV	MAIN GAS VALVE
MOV	VOLTAGE RESTRICTOR
MTR	MOTOR
MTS	MIXED AIR TEMPERATURE SWITCH
OAQ	OUTDOOR AIR QUALITY
OARH	OUTSIDE AIR RELATIVE HUMIDITY
OAT	OUTDOOR AIR TEMP. SENSOR
OFM	OUTDOOR FAN MOTOR
OFR	OUTDOOR FAN RELAY
OL	OVERLOAD
PL	PLUG ASSEMBLY
POT	POTENTIOMETER
PMR	PHASE MONITOR RELAY
QT	QUADRUPLE TERMINAL
RARH	RETURN AIR RELATIVE HUMIDITY
RAT	RETURN AIR TEMP. SENSOR
RDV	REHEAT DISCHARGE VALVE
RS	ROLLOUT SWITCH
RVSR	REVERSING VALVE SOLENOID RELAY
SAT	SUPPLY AIR TEMP. SENSOR
SEN	SENSOR
SPRH	SPACE RELATIVE HUMIDITY
SPT	SPACE TEMPERATURE SENSOR
SPTO	SPACE TEMPERATURE OFFSET
STD	STANDARD
TB	TERMINAL BLOCK
TBR	TEMPERATURE BYPASS RELAY
TDR	TIME DELAY RELAY(WINTER START)
TRAN	TRANSFORMER
UCB	UNIT CONTROL BOARD

50TM001915 D

Sequence of operation

General

The sequence below describes the sequence of operation for an electromechanical unit with and without a factory-installed EconomizerONE (POL224 controller). For information regarding a direct digital controller, see the start-up, operations, and troubleshooting manual for the applicable controller.

Electromechanical units with no economizer

Cooling (two stage units)

When the thermostat calls for cooling, terminals G and Y1 are energized. The indoor fan will run at the low fan speed and the C1 compressor contactor (C1) is energized causing the compressor and outdoor fan to run. The low indoor fan speed is 60% or 66% of the user set fan speed depending on unit size.

If additional cooling is needed, the thermostat will add the call for Y2. This will increase the indoor fan speed to the user set fan speed and energize the C2 contactor bringing on the second compressor for full compressor capacity. The outdoor fan is the same speed for Y1 and Y2.

When the thermostat removes the call for Y2 but leaves the Y1, the indoor fan will slow to the reduced percentage of the user set fan speed, the C2 contactor will de-energize, the second compressor will turn off, and the outdoor fan will remain on. When the thermostat removes the call for Y1 the C1 contactor will de-energize shutting down the compressor and the outdoor fan. When the thermostat removes the call for G, the indoor fan will turn off after the specific unit fan off delay.

NOTE: Per ASHRAE 90.1-2019 and IECC-2018 standards, during the first stage cooling operation the Unit Control Board (UCB) will adjust the fan motor speed to provide 60% or 66% of the total cfm established for the unit.

Gas heating (48GC units)

NOTE: WeatherMaster® units have 2 stages of gas heat.

When the thermostat calls for heating, power is sent to W on the Integrated Gas Controller (IGC) board. An LED (light-emitting diode) on the IGC board turns on and remains on during normal operation. A check is made to ensure that the roll-out switch and limit switch are closed. If the check was successful, the induced-draft motor is energized, and when its speed is satisfactory, as proven by the flue gas pressure switch, the ignition activation period begins. The burners will ignite within 5 seconds. If the burners do not light, there is a 22 second delay before another 5 second attempt. This sequence is repeated for 15 minutes or until the burners light. If, after the 15 minutes, the burners still have not lit, heating is locked out. To reset the control, break 24-v power to the thermostat.

When ignition occurs, the IGC board will continue to monitor the condition of the roll-out switch, the limit switches, the flue gas pressure switch, as well as the flame sensor. 45 seconds after ignition occurs, assuming the unit is controlled through a room thermostat set for fan auto, the indoor-fan motor will energize (and the outdoor-air dampers will open to their minimum position). If, for some reason, the over-temperature limit opens prior to the start of the indoor fan blower, the unit will shorten the 45 second delay to 5 seconds less than the time from initiation of heat to when the limit tripped. Gas will not be interrupted to the burners and heating will continue. Once the fan-on delay has been modified, it will not change back to 45 seconds until power is reset to the control. On units with 2 stages of heat, when additional heat is required, W2 closes and initiates power to the second stage of the main gas valve. When the thermostat is satisfied, W1 and W2 open and the gas valve closes, interrupting the flow of gas to the main burners. If the unit is controlled through a room thermostat set for fan auto, the indoor-fan motor will continue to operate for an additional 90 seconds then stop. A LED indicator is provided on the IGC to monitor operation.

Electric heating (50GC units)

50GC units may be sold with or without factory installed heaters. If field-installed electric heaters are required, use only factory-approved heaters. They will operate as follows.

Units have either 1 or 2 stages of electric heat. When the thermostat calls for heating, power is applied to G and the W1 terminals at the unit. The unit control will energize the indoor fan contactor and the first stage of electric heat. On units with two-stage heating, when additional heating is required, the second stage of electric heat (if equipped) will be energized when power is applied at the W2 terminal on the unit.

IMPORTANT: The thermostat must be configured for Electric Heat so it will energize G with the W1 call.

Electromechanical units with factory-installed EconomizerONE

When free cooling is not available, the compressors will be controlled by the zone thermostat. When free cooling is available, the outdoor-air damper is modulated by the EconomizerONE control to provide a 50°F (10°C) to 55°F (13°C) mixed-air temperature into the zone. As the mixed air temperature fluctuates above 55°F (13°C) or below 50°F (10°C) dampers will be modulated (open or close) to bring the mixed-air temperature back within control. If mechanical cooling is utilized with free cooling, the outdoor-air damper will maintain its current position at the time the compressor is started. If the increase in cooling capacity causes the mixed-air temperature to drop below 45°F (7°C), then the outdoor-air damper position will be decreased to the minimum position. If the mixed-air temperature continues to fall, the outdoor-air damper will close. Control returns to normal once the mixed-air temperature rises above 48°F (9°C). The power exhaust fans will be energized and de-energized, if installed, as the outdoor-air damper opens and closes.

If field-installed accessory CO_2 sensors are connected to the EconomizerONE control, a demand controlled ventilation strategy will begin to operate. As the CO_2 level in the zone increases above the CO_2 setpoint (on the EconomizerONE controller), the minimum position of the damper will be increased proportionally until the Maximum Ventilation setting is reached. As the CO_2 level decreases because of the increase in fresh air, the outdoor-air damper will follow the higher demand condition from either the DCV mode or from the free cooling mode. For EconomizerONE operation, there must be a thermostat call for the fan (G). If the unit is occupied and the fan is on, the damper will operate at minimum position. Otherwise, the damper will be closed.

When the EconomizerONE control is in the occupied mode and a call for cooling exists (Y1 on the thermostat), the control will first check for indoor fan operation. If the fan is not on, then cooling will not be activated. If the fan is

on, then the control will open the EconomizerONE damper to the minimum position.

On the initial power to the EconomizerONE control, it will take the damper up to 2-1/2 minutes before it begins to position itself. After the initial power-up, further changes in damper position can take up to 90 seconds to initiate. Damper movement from full closed to full open (or vice versa) will take between 1-1/2 and 2-1/2 minutes. If free cooling can be used as determined from the appropriate changeover command (dry bulb, outdoor enthalpy, differential dry bulb, or differential enthalpy), then the control will modulate the dampers open and closed to maintain the mixed-air temperature setpoint at 50°F (10°C) to 55°F (13°C). If there is a further demand for cooling (cooling second stage — Y2 is energized), then the control will bring on compressor stage 1 to maintain the mixed-air temperature setpoint. The EconomizerONE damper will be open at maximum position.

2-Speed Note: When operating in ventilation mode only, the indoor fan motor will automatically adjust to 75% of the total cfm established.

Heating

The sequence of operation for the heating is the same as an electromechanical unit with no economizer. The only difference is how the economizer acts. The economizer will stay at the Economizer Minimum Position while the evaporator fan is operating. The outdoor-air damper is closed when the indoor fan is not operating. Refer to Service and Maintenance Manual for further details.

Optional Humidi-MiZer® dehumidification system

Units with the factory equipped Humidi-MiZer system option are capable of providing multiple modes of improved dehumidification as a variation of the normal cooling cycle. The Humidi-MiZer system option includes additional valves in the liquid line and discharge line of the refrigerant circuit, a small reheat condenser coil downstream of the evaporator, and variable-speed control of some or all outdoor fans. Operation of the revised refrigerant circuit for each mode is described below.

The Humidi-MiZer system provides three sub-modes of operation: Cool, Reheat1, and Reheat2.

Cool mode — Provides a normal ratio of Sensible and Latent Cooling effect from the evaporator coil.

Reheat1 — Provides increased Latent Cooling while slightly reducing the Sensible Cooling effect.

Reheat2 — Provides normal Latent Cooling but with null or minimum Sensible Cooling effect delivered to the space.

The Reheat1 and Reheat2 modes are available when the unit is not in a Heating mode and when the Low Ambient Lockout switch is closed.

Refer to the following figures for piping flow diagrams.

SystemVu™ controller (factory option)

For details on operating 48/50GC units equipped with the factory-installed SystemVu controller option, refer to FC/GC Series Single Package Rooftop Units with SystemVu Controller Controls, Start-Up, Operation and Troubleshooting manual.

Normal Cooling Mode

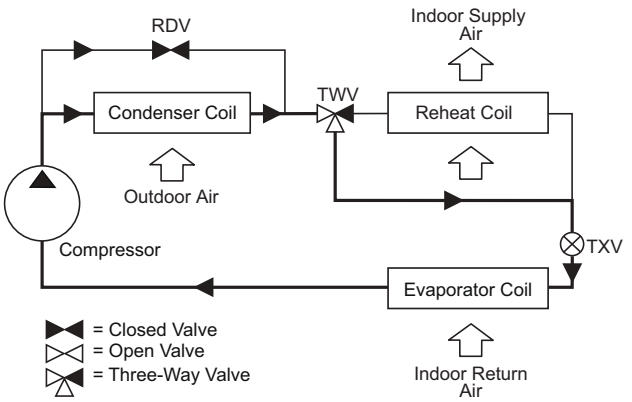

Subcooling Mode (Reheat1)

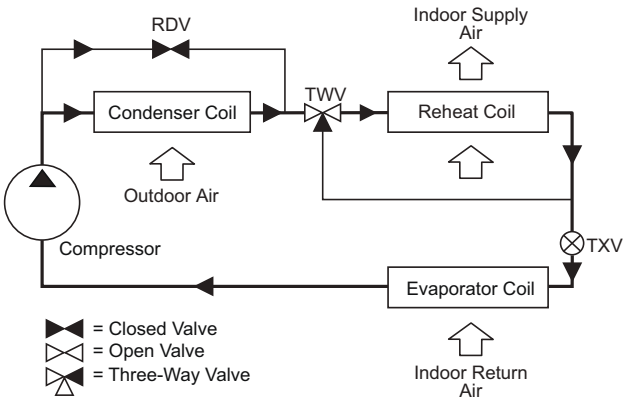

Hot Gas Reheat Mode (Reheat2)

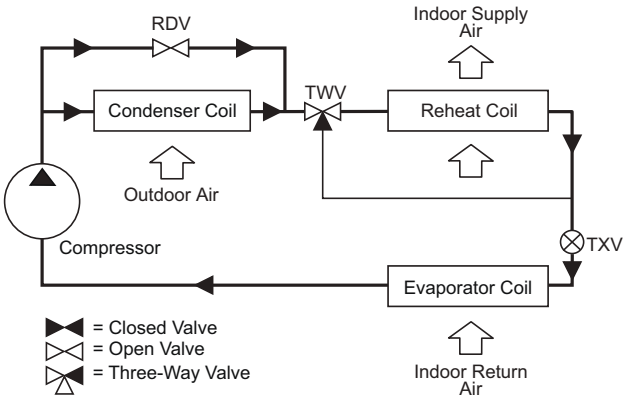

LEGEND

RDV — Reheat Discharge Valve
TWV — Three-Way Valve
TXV — Thermostatic Expansion Valve

Minimum operating ambient temperature (cooling)

In mechanical cooling mode, your Carrier rooftop unit can safely operate down to an outdoor ambient temperature of 40°F (4°C) [0°F (–18°C) for size 12 models]. It is possible to provide cooling at lower outdoor ambient temperatures by using less outside air, economizers, and/or accessory low ambient kits.

Maximum operating ambient temperature (cooling)

The maximum operating ambient temperature for cooling mode is 125°F (52°C) except for size 12 models with 120°F (49°C). While cooling operation above 115°F (46°C) [120°F (49°C) for size 12 models] may be possible, it could cause either a reduction in performance, reliability, or a protective action by the unit's internal safety devices.

Multiple motor and drive packages

Some applications need larger horsepower motors, some need more airflow, and some need both. Regardless of the case, your Carrier expert has a factory installed combination to meet your application. A wide selection of motors are available, factory installed, to handle nearly any application.

Stainless steel heat exchanger (48GC units only)

The stainless steel heat exchanger option provides the tubular heat exchanger be made out of a minimum 20 gauge type 409 stainless steel for applications where the mixed air to the heat exchanger is expected to drop below 45°F (7°C). Stainless steel may be specified on applications where the presence of airborne contaminants require its use (applications such as paper mills) or in area with very high outdoor humidity that may result in severe condensation in the heat exchanger during cooling operation.

Minimum mixed air temperature (heating) (48GC units only)

Using the factory settings, the minimum temperatures for the mixed air (the combined temperature of the warm return air and the cold outdoor air) entering the dimpled, gas heat exchangers are shown in the following table.

Minimum Temperature for Mixed Air Temperature

ALUMINIZED	STAINLESS STEEL
50°F (10°C) Continuous	40°F (4°C) Continuous
45°F (7°C) Intermittent	35°F (2°C) Intermittent

Operating at lower mixed-air temperatures may be possible, if a field-supplied, outdoor air thermostat initiates both heat stages when the temperature is less than the minimum temperatures listed above. Please contact your local Carrier representative for assistance.

Minimum and maximum airflow (heating and cooling)

To maintain safe and reliable operation of your rooftop, operate within the heating airflow limits during heating mode and cooling airflow limits during cooling mode. Operating above the max may cause blow-off, undesired airflow noise, or airflow related problems with the rooftop unit. Operating below the min may cause problems with coil freeze-up and unsafe heating operation. Heating and cooling limitations differ when evaluating operating cfm, minimum value is the HIGHER of the cooling and heating minimum cfm values published on page 8 and the maximum value is the LOWER of the cooling and heating maximum values published on page 8.

Heating-to-cooling changeover

Your unit will automatically change from heating to cooling mode when using a thermostat with an auto-changeover feature.

Airflow

All units are draw-though in cooling mode and blow-through in heating mode.

Outdoor air application strategies

Economizers reduce operating expenses and compressor run time by providing a free source of cooling and a means of ventilation to match application changing needs. In fact, they should be considered for most applications. Also, consider the various economizer control methods and their benefits, as well as sensors required to accomplish your application goals. Please contact your local Carrier representative for assistance.

Motor limits, break horsepower (bhp)

Due to internal design of Carrier units, the air path, and specially designed motors, the full horsepower (maximum continuous bhp) band, as listed in the Fan Performance tables, can be used with the utmost confidence. There is no need for extra safety factors, as Carrier motors are designed and rigorously tested to use the entire, listed bhp range without either nuisance tripping or premature motor failure.

Propane heating (48GC units only)

Propane has different physical qualities than natural gas. As a result, propane requires different fuel to air mixture. To optimize the fuel/air mixture for propane, Carrier sells different burner orifices in an easy to install accessory kit. To select the correct burner orifices or determine the heat capacity for a propane application, use either the selection software, or the unit's service manual.

High altitude heating

High altitudes have less oxygen, which affects the fuel/air mixture in heat exchangers. In order to maintain a proper fuel/air mixture, heat exchangers operating in altitudes above 2000 ft (610 m) require different orifices. To select the correct burner orifices or determine the heat capacity for a high altitude application, use either the selection software, or the unit's service manual.

High altitudes have less oxygen, which means heat exchangers need less fuel. The new gas orifices in this field-installed kit make the necessary adjustment for high altitude applications. They restore the optimal fuel to air mixture and maintain healthy combustion on altitudes above 2000 ft (610 m).

NOTE: Typical natural gas heating value ranges from 975 to 1050 Btu/ft^3 at sea level nationally. The heating value goes down approximately 1.7% per every thousand feet elevation. Standard factory orifices can typically be used up to 2000 ft (610 m) elevation without any operational issues.

Sizing a rooftop

Bigger is not necessarily better. While an air conditioner needs to have enough capacity to meet the design loads, it does not need excess capacity. In fact, excess capacity typically results in very poor part load performance and humidity control.

Using higher design temperatures than ASHRAE recommends for your location, adding "safety factors" to the calculated load, are all signs of oversizing air conditioners. Oversizing the air conditioner leads to poor humidity control, reduced efficiency, higher utility bills, larger indoor temperature swings, excessive noise, and increased wear and tear on the air conditioner.

Rather than oversizing an air conditioner, engineers should "right-size" or even slightly "under-size" air conditioners. Correctly sizing an air conditioner controls humidity better; promotes efficiency; reduces utility bills; extends equipment life, and maintains even, comfortable temperatures. Please contact your local Carrier representative for assistance.

Low ambient applications

The optional Carrier economizer can adequately cool your space by bringing in fresh, cool outside air. In fact, when so equipped, accessory low-ambient kit may not be necessary. In low ambient conditions, unless the outdoor air is excessively humid or contaminated, economizer-based "free cooling" is the preferred less costly and energy conscious method. In low ambient applications where outside air might not be desired (such as contaminated or excessively humid outdoor environments), your Carrier rooftop can operate to ambient temperatures down to 0°F (–18°C) using the recommended accessory low ambient controller.

NOTE: 0°F (–18°C) is standard on size 12 models.

Guide specifications — 48GC

Note about this specification:
This specification is in the "Masterformat" as published by the Construction Specification Institute. Please feel free to copy this specification directly into your building spec.

Gas Heat/Electric Cooling Packaged Rooftop

HVAC Guide Specifications

Size Range: **6 to 12.5 Nominal Tons**

Carrier Model Number: **48GC*07-14**

Part 1 — (23 06 80) Schedules for Decentralized HVAC Equipment

1.01 (23 06 80.13) Decentralized Unitary HVAC Equipment Schedule

A. (23 06 80.13.A.) Rooftop Unit (RTU) Schedule:

1. Schedule is per the project specification requirements.

Part 2 — (23 07 16) HVAC Equipment Insulation

2.01 (23 07 16.13) Decentralized, Rooftop Units:

A. (23 07 16.13.A.) Evaporator Fan Compartment:

1. Interior cabinet surfaces shall be insulated with a minimum 1/2 in. thick, minimum 1-1/2 lb density, flexible fiberglass insulation bonded with a phenolic binder, neoprene coated on the air side.
2. Insulation and adhesive shall meet NFPA 90A requirements for flame spread and smoke generation.

B. (23 07 16.13.B.) Gas Heat Compartment:

1. Aluminum foil-faced fiberglass insulation shall be used.
2. Insulation and adhesive shall meet NFPA 90A requirements for flame spread and smoke generation.

Part 3 — (23 09 13) Instrumentation and Control Devices for HVAC

3.01 (23 09 13.23) Sensors and Transmitters

A. (23 09 13.23.A.) Thermostats:

1. Thermostat must:
   a. energize both "W" and "G" when calling for heat.
   b. have capability to energize 2 stages of cooling, and 2 different stages of heating.
   c. include capability for occupancy scheduling.

Part 4 — (23 09 23) Direct Digital Control system for HVAC

4.01 (23 09 23.13) Decentralized, Rooftop Units:

A. (23 09 23.13.A.) SystemVu™ intelligent integrated Direct Digital Control (DDC) shall provide:

1. Integrated unit operation for comfort cooling, heating ventilation as well as all monitoring, recording and reporting capabilities. Controller shall also provide diagnostics and alarms of abnormal unit operation through the controller. Controller shall have an intuitive user display and be able to be used in a standalone operation or via building automation system (BAS).
2. Quick Unit Status LEDs of: RUN — meaning all systems are go, ALERT — that indicates there is currently a non-critical issue with the unit, like filters need to be replaced and FAULT — that indicates the unit has a critical issue and will possibly shut down.
3. Six large navigation keys for easy access. Navigation keys shall consist of: TEST, BACK, ENTER, and MENU along with UP and DOWN arrows.
4. Full back lit user display with 4 line by 30 character text capabilities. Display menu shall be designed to provide guided major menus and sub menus main menus provided below:
   a. Shutdown Unit
   b. Run Status
   c. Settings
   d. Alerts/Faults
   e. Service
   f. Inputs
   g. Outputs
   h. USB
5. The capability for standalone operation with conventional thermostat/sensor or use with building automation systems (BAS) of Carrier i-Vu®, BACnet[1] MS/TP and Carrier Comfort Network® (CCN) systems. No special modules or boards are required for these capabilities. Has the capability to work with Equipment Touch™ and System Touch™ devices and ZS Sensors.
6. The ability to read refrigerant pressures at display or via BAS network of Discharge Pressure and Suction Pressure. The need for traditional refrigerant gauges is not required.
7. USB Data Port for flash drive interaction. This will allow the transfer of data for uploads, downloads, perform software upgrades, backup and restore data and file transfer data such as component number of starts and run hours.
8. Reverse Rotation Protection of compressors if field three phase wiring is misapplied.
9. Provide Service Capabilities of:
   a. Auto run test
   b. Manual run test
   c. Component run hours and starts
   d. Commissioning reports
   e. Data logging
   f. Alarm history

1. Third-party trademarks and logos are the property of their respective owners.

10. Economizer control and diagnostics. Set up economizer operation, receive feedback from actuator. Also meets the most recent California Title 24, ASHRAE 90.1 and IECC Fault Detection and Diagnostic (FDD) requirements.
11. Unit cooling operation down to 40°F (4°C) [0°F (–18°C) for size 12 models].
12. Controller shall have easy access connections around the controller perimeter area and consist of Mate-N-Lok, terminal block and RJ style modular jack connections.
13. 365 day real time clock, 20 holiday schedules along with occupied and unoccupied scheduling.
14. Auto-Recognition for easy installation and commissioning of devices like economizers, space sensors etc.
15. A 5°F (3°C) temperature difference between cooling and heating set points to meet the latest ASHRAE 90.1 Energy Standard.
16. Contain return air sensor, supply air sensor and outdoor air sensor to help monitor and provide data for the unit comfort operation, diagnostic and alarms.
17. Use of Carrier's field accessory hand-held Navigator™ display, Equipment Touch and System Touch devices.
18. Units with the factory-installed Humidi-MiZer® system option are capable of providing multiple modes of improved dehumidification as a variation of the normal cooling cycle.
19. Supply Air Tempering control operates the gas or electric heat to maintain a minimum supply air temperature during conditions where very cold outdoor air causes the supply air temperature to fall below the configured Supply Air Tempering Setpoint. This occurs during periods where DCV is active and increasing the amount of outdoor air or in cases where the system is operating at very low airflow and the calculated economizer position has increased to maintain a constant ventilation rate.
20. Demand limiting in SystemVu™ is achieved through set point expansion. The systems heating and cooling set points are expanded in steps or levels. The degree to which the set points may be expanded is defined by the 6 demand level offsets and the 2 commanded demand limit levels.
21. 3-year limited part warranty.

Part 5 — (23 09 33) Electric and Electronic Control System for HVAC

5.01 (23 09 33.13) Decentralized, Rooftop Units:

A. (23 09 33.13.A.) General:

1. Shall be complete with self-contained low-voltage control circuit protected by a resettable circuit breaker on the 24-v transformer side. Transformer shall have 75VA capability.
2. Shall utilize color-coded wiring.
3. Shall include a Unit Control Board to conveniently and safely provide connection points for vital control functions such as: smoke detectors, phase monitor, gas controller, economizer, thermostat, DDC control options, and low and high pressure switches. Controller shall also provide an intuitive means to adjust the indoor fan speed through a simple switch and pot adjustment design.
4. The heat exchanger shall be controlled by an integrated gas controller (IGC) microprocessor. See heat exchanger section of this specification.
5. Unit shall include a minimum of one 8-pin screw terminal connection board for connection of control wiring.

B. (23 09 33.13.B.) Safeties:

1. Compressor over-temperature, over-current. High internal pressure differential.
2. Low Pressure Switch.
   a. Low pressure switch shall use different color wire than the high pressure switch. The purpose is to assist the installer and service technician to correctly wire and or troubleshoot the rooftop unit.
3. High Pressure Switch.
   a. High pressure switch shall use different color wire than the low pressure switch. The purpose is to assist the installer and service technician to correctly wire and or troubleshoot the rooftop unit.
4. Mixed Air Auto Reset Temperature Switch.
   a. When return air temperatures get the critical point that can cause compressor reliability issues, this switch will shut down compression only until the temperature raise accordingly. Switch opens at 60°F (16°C) and closes at 65°F (18°C).
5. Automatic Reset, Motor Thermal Overload Protector.
6. Heating section shall be provided with the following minimum protections:
   a. High temperature limit switches.
   b. Induced draft motor speed sensor.
   c. Flame rollout switch.
   d. Flame proving controls.

Part 6 — (23 09 93) Sequence of Operations for HVAC Controls

6.01 (23 09 93.13) Decentralized, Rooftop Units:

A. (23 09 93.13.A.) INSERT SEQUENCE OF OPERATION

Part 7 — (23 40 13) Panel Air Filters

7.01 (23 40 13.13) Decentralized, Rooftop Units:

A. (23 40 13.13.A.) Standard Filter Section:

1. Shall consist of factory installed, low velocity, disposable 2 in. thick fiberglass filters of commercially available sizes.
2. Unit shall use only one filter size. Multiple sizes are not acceptable.
3. Filters shall be accessible through an access panel with "no-tool" removal as described in the unit cabinet section of this specification (23 81 19.13.G).

Part 8 — (23 81 19) Self-Contained Air Conditioners

8.01 (23 81 19.13) Small-Capacity Self-Contained Air Conditioners:

A. (23 81 19.13.A.) General:

1. Outdoor, rooftop mounted, electrically controlled, heating and cooling unit utilizing a fully hermetic scroll compressors for cooling duty and gas combustion for heating duty.
2. Factory assembled, single-piece heating and cooling rooftop unit. Contained within the unit enclosure shall be all factory wiring, piping, controls, and special features required prior to field start-up.
3. Unit shall use Puron® (R-410A) refrigerant.
4. Unit shall be installed in accordance with the manufacturer's instructions.
5. Unit must be selected and installed in compliance with local, state, and federal codes.

B. (23 81 19.13.B.) Quality Assurance:

1. Unit meets ASHRAE 90.1 minimum efficiency requirements.
2. Unit shall be rated in accordance with AHRI Standards 340/360.
3. Unit shall be designed to conform to ASHRAE 15.
4. Unit shall be UL-tested and certified in accordance with ANSI Z21.47 Standards and UL-listed and certified under Canadian standards as a total package for safety requirements.
5. Insulation and adhesive shall meet NFPA 90A requirements for flame spread and smoke generation.
6. Unit casing shall be capable of withstanding 500 hour salt spray exposure per ASTM B117 (scribed specimen).
7. Unit shall be designed in accordance with ISO 9001, and shall be manufactured in a facility registered by ISO 9001:2015.
8. Roof curb shall be designed to conform to NRCA Standards.
9. Unit shall be subjected to a completely automated run test on the assembly line. The data for each unit will be stored at the factory, and must be available upon request.
10. Unit shall be designed in accordance with UL Standard 60335-2-40, including tested to withstand rain.
11. Unit shall be constructed to prevent intrusion of snow and tested to prevent snow intrusion into the control box up to 40 mph.
12. Unit shake tested to assurance level 1, ASTM D4169 to ensure shipping reliability.

C. (23 81 19.13.C.) Delivery, Storage, and Handling:

1. Unit shall be stored and handled per manufacturer's recommendations.
2. Lifted by crane requires either shipping top panel or spreader bars.
3. Unit shall only be stored or positioned in the upright position.

D. (23 81 19.13.D.) Project Conditions:

1. As specified in the contract.

E. (23 81 19.13.E.) Operating Characteristics:

1. Unit shall be capable of starting and running at 125°F (52°C) ambient outdoor temperature except 12 size models that are capable of starting and running at 120°F (49°C), meeting maximum load criteria of AHRI Standard 340/360 at ±10% voltage.
2. Compressor with standard controls shall be capable of operation down to 40°F (4°C) or 0°F (–18°C) for size 12 models], ambient outdoor temperatures. Accessory winter start kit is necessary if mechanically cooling at ambient temperatures down to 25°F (–4°C) or 0°F (–18°C).
3. Unit shall discharge supply air vertically or horizontally as shown on contract drawings.
4. Unit shall be factory configured for vertical supply and return configurations.
5. Unit shall be field convertible from vertical to horizontal airflow on all models. No special kit required except on 14 size models that require a Supply Duct Kit field installed for horizontal air flow.
6. Unit shall be capable of mixed operation: vertical supply with horizontal return or horizontal supply with vertical return.

F. (23 81 19.13.F.) Electrical Requirements:

1. Main power supply voltage, phase, and frequency must match those required by the manufacturer.
2. Standard Control Panel SCCR (short circuit current rating): 5kA RMS at Rated Symmetrical Voltage.

G. (23 81 19.13.G.) Unit Cabinet:

1. Unit cabinet shall be constructed of galvanized steel, and shall be bonderized and coated with a prepainted baked enamel finish on all externally exposed surfaces.
2. Unit cabinet exterior paint shall be: film thickness, (dry) 0.003 inches minimum, gloss

(per ASTM D523, 60°F/16°C): 60, Hardness: H-2H Pencil hardness.

3. Evaporator fan compartment interior cabinet insulation shall conform to AHRI Standards 340/360 minimum exterior sweat criteria. Interior surfaces shall be insulated with a minimum 1/2 in. thick, 1 lb density, flexible fiberglass insulation, neoprene coated on the air side. Aluminum foil-faced fiberglass insulation shall be used in the gas heat compartment.
4. Base of unit shall have a minimum of four locations for thru-the-base gas and electrical connections (factory-installed or field-installed), standard.
5. Base Rail:
   a. Unit shall have base rails on a minimum of 2 sides.
   b. Holes shall be provided in the base rails for rigging shackles to facilitate maneuvering and overhead rigging.
   c. Holes shall be provided in the base rail for moving the rooftop by fork truck.
   d. Base rail shall be a minimum of 16 gauge thickness.
6. Condensate Pan and Connections:
   a. Shall be a sloped condensate drain pan made of a corrosion resistant material.
   b. Shall comply with ASHRAE Standard 62.
   c. Shall use a 3/4 in. 14 NPT drain connection, possible either through the bottom or side of the drain pan. Connection shall be made per manufacturer's recommendations.
7. Top Panel:
   a. Shall be a single piece top panel on 07-12 models and two piece on 14 size models.
8. Gas Connections:
   a. All gas piping connecting to unit gas valve shall enter the unit cabinet at a single location on side of unit (horizontal plane).
   b. Thru-the-base capability.
      1) Standard unit shall have a thru-the-base gas-line location using a raised, embossed portion of the unit basepan.
      2) Optional, factory approved, water-tight connection method must be used for thru-the-base gas connections.
      3) No basepan penetration, other than those authorized by the manufacturer, is permitted.
9. Electrical Connections:
   a. All unit power wiring shall enter unit cabinet at a single, factory prepared, knockout location.
   b. Thru-the-Base Capability.
      1) Standard unit shall have a thru-the-base electrical location(s) using a raised, embossed portion of the unit basepan.
      2) Optional, factory approved, water-tight connection method must be used for thru-the-base electrical connections.
      3) No basepan penetration, other than those authorized by the manufacturer, is permitted.
10. Component Access Panels (standard):
   a. Cabinet panels shall be easily removable for servicing.
   b. Unit shall have one factory installed, toolless, removable, filter access panel.
   c. Panels covering control box, indoor fan, indoor fan motor, gas components (where applicable), and compressors shall have molded composite handles.
   d. Handles shall be UV modified, composite. They shall be permanently attached, and recessed into the panel.
   e. Screws on the vertical portion of all removable access panel shall engage into heat resistant, molded composite collars.
   f. Collars shall be removable and easily replaceable using manufacturer recommended parts.

H. (23 81 19.13.H.) Gas Heat:
1. General:
   a. Heat exchanger shall be an induced draft design. Positive pressure heat exchanger designs shall not be allowed.
   b. Shall incorporate a direct-spark ignition system and redundant main gas valve.
   c. Gas supply pressure at the inlet to the rooftop unit gas valve must match that required by the manufacturer.
2. The heat exchanger shall be controlled by an integrated gas controller (IGC) microprocessor.
   a. IGC board shall notify users of fault using an LED (light-emitting diode).
   b. The LED shall be visible without removing the control box access panel.
   c. IGC board shall contain algorithms that modify evaporator fan operation to prevent future cycling on high temperature limit switch.
   d. Unit shall be equipped with anti-cycle protection with one short cycle on unit flame rollout switch or 4 continuous short cycles on the high temperature limit switch. Fault indication shall be made using an LED.
3. Standard Heat Exchanger Construction:
   a. Heat exchanger shall be of the tubular-section type constructed of a minimum of 20-gauge

steel coated with a nominal 1.2 mil aluminum-silicone alloy for corrosion resistance.

b. Burners shall be of the in-shot type constructed of aluminum-coated steel.

c. Burners shall incorporate orifices for rated heat output up to 2000 ft (610 m) elevation. Additional accessory kits may be required for applications above 2000 ft (610 m) elevation, depending on local gas supply conditions.

d. Each heat exchanger tube shall contain multiple dimples for increased heating effectiveness.

4. Optional Stainless Steel Heat Exchanger construction:

a. Use energy saving, direct-spark ignition system.

b. Use a redundant main gas valve.

c. Burners shall be of the in-shot type constructed of aluminum-coated steel.

d. All gas piping shall enter the unit cabinet at a single location on side of unit (horizontal plane).

e. The optional stainless steel heat exchanger shall be of the tubular-section type, constructed of a minimum of 20-gauge type 409 stainless steel.

f. Type 409 stainless steel shall be used in heat exchanger tubes and vestibule plate.

g. Complete stainless steel heat exchanger allows for greater application flexibility.

5. Induced Draft Combustion Motor and Blower:

a. Shall be a direct-drive, single inlet, forward-curved centrifugal type.

b. Shall be made from steel with a corrosion resistant finish.

c. Shall have permanently lubricated sealed bearings.

d. Shall have inherent thermal overload protection.

e. Shall have an automatic reset feature.

I. (23 81 19.13.I.) Coils:

1. Standard Aluminum Fin Copper Tube Coils:

a. Standard evaporator and condenser coils shall have aluminum lanced plate fins mechanically bonded to seamless internally grooved copper tubes with all joints brazed.

b. Evaporator coils shall be leak tested to 150 psig, pressure tested to 450 psig, and qualified to UL 1995 burst test at 1775 psig.

c. Condenser coils shall be leak tested to 150 psig, pressure tested to 650 psig, and qualified to UL 1995 burst test at 1980 psig.

2. Optional Pre-coated Aluminum Fin Condenser Coils:

a. Shall have a durable epoxy-phenolic coating to provide protection in mildly corrosive coastal environments.

b. Coating shall be applied to the aluminum fin stock prior to the fin stamping process to create an inert barrier between the aluminum fin and copper tube.

c. Epoxy-phenolic barrier shall minimize galvanic action between dissimilar metals.

d. Corrosion durability of fin stock shall be confirmed through testing to be no less than 1000 hours salt spray per ASTM B117-90.

e. Corrosion durability of fin stock shall be confirmed through testing to have no visible corrosion after 48 hour immersion in a room temperature solution of 5% salt, 1% acetic acid.

f. Fin stock coating shall pass 2000 hours of the following: one week exposure in the prohesion chamber followed by one week of accelerated ultraviolet light testing. Prohesion chamber: the solution shall contain 3.5% sodium chloride and 0.35% ammonium sulfate. The exposure cycle is one hour of salt fog application at ambient followed by one hour drying at 95°F (35°C).

3. Optional Copper Fin Evaporator and Condenser Coils:

a. Shall be constructed of copper fins mechanically bonded to copper tubes and copper tube sheets.

b. Galvanized steel tube sheets shall not be acceptable.

c. A polymer strip shall prevent coil assembly from contacting the sheet metal coil pan to minimize potential for galvanic corrosion between coil and pan.

4. Optional E-coated Aluminum Fin Evaporator and Condenser Coils:

a. Shall have a flexible epoxy polymer coating uniformly applied to all coil surface areas without material bridging between fins.

b. Coating process shall ensure complete coil encapsulation of tubes, fins and headers.

c. Color shall be high gloss black with gloss per ASTM D523-89.

d. Uniform dry film thickness from 0.8 to 1.2 mil on all surface areas including fin edges.

e. Superior hardness characteristics of 2H per ASTM D3363-92A and cross-hatch adhesion of 4B-5B per ASTM D3359-93.

f. Impact resistance shall be up to 160 in. lb (ASTM D2794-93).

g. Humidity and water immersion resistance shall be up to minimum 1000 and 250 hours respectively (ASTM D2247-92 and ASTM D870-92).

h. Corrosion durability shall be confirmed through testing to be no less than 1000 hours salt spray per ASTM B117-90.

J. (23 81 19.13.J.) Refrigerant Components:

1. Refrigerant circuit shall include the following control, safety, and maintenance features:

a. Thermostatic Expansion Valve (TXV) shall help provide optimum performance across the entire operating range. Shall contain removable power element to allow change out of power element and bulb without removing the valve body.

b. Refrigerant filter drier — Solid core design.

c. Service gauge connections on suction and discharge lines.

d. Pressure gauge access through a specially designed access port in the top panel of the unit.

2. Compressors:

a. Unit shall use two scroll compressors installed in a tandem configuration on a single refrigeration circuit.

b. Evaporator coils shall be a full active design to help better control comfort latent removal.

c. Compressor motors shall be cooled by refrigerant gas passing through motor windings.

d. Compressors shall be internally protected from high discharge temperature conditions.

e. Compressors shall be protected from an over-temperature and over-amperage conditions by an internal, motor overload device.

f. Compressor shall be factory-mounted on rubber grommets.

g. Compressor motors shall have internal line break thermal, current overload and high pressure differential protection.

h. Crankcase heaters shall not be required for normal operating range, unless required by the manufacturer due to refrigerant charge limits.

K. (23 81 19.13.K.) Return Air Filter Section:

1. Filters access is specified in the unit cabinet section of this specification.

2. Filters shall be held in place by a pivoting filter tray, facilitating easy removal and installation.

3. Shall consist of factory installed, low velocity, throw-away 2 in. thick fiberglass filters.

4. Filters shall be standard, commercially available sizes.

5. Only one size filter per unit is allowed.

L. (23 81 19.13.L.) Evaporator Fan and Motor with EcoBlue™ Technology:

1. Direct Drive Evaporator fan motor:

a. Shall be a ECM motor design.

b. Shall have permanently lubricated bearings.

c. Shall have inherent automatic-reset thermal overload protection.

d. Shall have slow ramp up to speed capabilities.

e. Shall require no fan/motor belts for operation, adjustments and or initial fan speed set up.

f. Fan DC voltage set up on Unit Control Board can eliminate the need of removal of blower access door, required on conventional belt drive systems.

g. Shall be internally protected from electrical phase reversal and loss.

2. Evaporator Fan:

a. Shall be easily set with dedicated selection switch and adjustment pot on unit control board or through SystemVu™ controller.

b. Shall provide two stage cooling capacity control, the indoor fan speed is automatically controlled to meet the code-compliant <66% low fan speed and 100% at full fan speed operation.

c. Blower fan shall be a Vane Axial fan design with 75% less moving parts than a conventional belt drive system.

d. Shall be constructed of a cast aluminum stator and high impact composite material on stator, rotor and air inlet casing.

e. Shall be a patented design with a corrosion resistant material and dynamically balanced.

f. Shall have slow ramp up to speed capabilities to help reduce sound and comfort issues typically associated with single speed belt drive systems.

g. Shall be a slide out design with removal of a few support brackets.

3. Shall include an easily accessible Unit Control Board to conveniently and safely provide connection points for vital control functions such as: smoke detectors, phase monitor, gas controller, economizer, thermostat, DDC control options, and low, high and mixed air temperature switches. Controller shall also provide an intuitive means to adjust the indoor fan speed through a simple switch and pot adjustment design.

M. (23 81 19.13.M.) Condenser Fans and Motors:

1. Condenser Fan Motors:

a. Shall be a totally enclosed motor.

b. Shall use permanently lubricated bearings.

c. Shall have inherent thermal overload protection with an automatic reset feature.

d. Shall use a shaft-down design on all sizes.

2. Condenser Fans:

a. Shall be a direct-driven propeller type fan.

b. Shall have galvalum blades riveted to steel spider that have corrosion-resistant properties and shall be dynamically balanced.

N. (23 81 19.13.N.) Special Features Options and Accessories:

1. Integrated EconomizerONE and EconoMi$er® 2 Low Leak Rate Models.

a. Integrated, gear driven opposing modulating blade design type capable of simultaneous economizer and compressor operation.

b. Independent modules for vertical or horizontal return configuration shall be available. Vertical return modules shall be available as a factory installed option.

c. Damper blades shall be galvanized steel with composite gears. Plastic or composite blades on intake or return shall not be acceptable.

d. Shall include all hardware and controls to provide free cooling with outdoor air when temperature and/or humidity are below setpoints.

e. Shall be equipped with gear driven dampers for both the outdoor ventilation air and the return air for positive air stream control.

f. Standard leak rate shall be equipped with dampers not to exceed 2% leakage at 1 in. wg pressure differential.

g. Economizer controller on EconomizerONE models shall be Siemens POL224 that provides:

1) Combined minimum and DCV maximum damper position potentiometers with compressor staging relay.

2) Functions with solid-state analog enthalpy or dry bulb changeover control sensing.

3) LED indication for free cooling, sensor, and damper operation.

4) One-line LCD interface screen for setup, configuration, and troubleshooting.

5) Optional configuration via WLAN stick and Siemens Climatix™[1] smartphone app for easy setup.

6) On-board Fault Detection and Diagnostics (FDD) that senses and alerts when the economizer is not operating properly, per California Title 24, ASHRAE 90.1 and IECC[1].

7) Sensor failure loss of communication identification.

8) Capabilities for use with multiple-speed or single speed indoor fan systems.

9) Digital sensors: Dry bulb and Enthalpy.

h. Economizer controller on EconoMi$er 2 models with SystemVu™ controls shall be a 4 to 20mA design controlled directly by the controller. SystemVu controller meets California Title 24, ASHRAE 90.1 and IECC Fault Detection and Diagnostic (FDD) requirements.

i. Shall be capable of introducing up to 100% outdoor air.

j. Shall be equipped with a barometric relief damper capable of relieving up to 100% return air and contain seals that meet ASHRAE 90.1 requirements.

k. Shall be designed to close damper(s) during loss-of-power situations with spring return built into motor.

l. Dry bulb outdoor air temperature sensor shall be provided as standard. Enthalpy sensor is also available on factory-installed economizers only. Outdoor air sensor setpoint shall be adjustable and shall range from 40°F to 100°F (4°C to 38°C). Additional sensor options shall be available as accessories.

m. The economizer controller shall also provide control of an accessory power exhaust unit function. Factory set at 100%, with a range of 0% to 100%.

n. The economizer shall maintain minimum airflow into the building during occupied period and provide design ventilation rate for full occupancy.

o. Dampers shall be completely closed when the unit is in the unoccupied mode.

p. Economizer controller shall accept a 0 to 10 vdc CO_2 sensor input for IAQ/DCV control. In this mode, dampers shall modulate the outdoor air damper to provide ventilation based on the sensor input.

q. Compressor lockout temperature on POL224 control is adjustable from –45°F to 80°F (–43°C to 26°C), set at a factory default of 32°F (0°C).

r. Actuator shall be direct coupled to economizer gear. No linkage arms or control rods shall be acceptable.

s. Contains LED indication for free cooling, sensor, and damper operation.

2. Integrated EconomizerONE and EconoMi$er® 2 Ultra Low Leak Rate Models.

a. Integrated, gear driven opposing modulating blade design type capable of simultaneous economizer and compressor operation.

b. Independent modules for vertical or horizontal return configuration shall be available.

1. Third-party trademarks and logos are the property of their respective owners.

Vertical return modules shall be available as a factory-installed option.

c. Damper blades shall be galvanized steel with composite gears. Plastic or composite blades on intake or return shall not be acceptable.

d. Shall include all hardware and controls to provide free cooling with outdoor air when temperature and/or humidity are below setpoints.

e. Shall be equipped with gear driven dampers for both the outdoor ventilation air and the return air for positive air stream control.

f. Ultra Low Leak design meets California Title 24 section 140.4 and ASHRAE 90.1 requirements for 4 cfm per sq ft on the outside air dampers and 10 cfm per sq ft on the return dampers.

g. Economizer controller on EconomizerONE models shall be the Siemens POL224 that provides:

1) One-line LCD interface screen for setup, configuration and troubleshooting.

2) Optional configuration via WLAN stick and Siemens Climatix™[1] smartphone app for easy setup.

3) On-board Fault Detection and Diagnostics (FDD) that senses and alerts when the economizer is not operating properly, per California Title 24, ASHRAE 90.1 and IECC.

4) Sensor failure loss of communication identification.

5) Capabilities for use with multiple-speed indoor fan systems.

6) Digital sensors: Dry bulb and Enthalpy.

h. Economizer controller on EconoMi$er 2 models with SystemVu™ controls shall be a 4-20mA design controlled directly by the controller. SystemVu controller meets California Title 24, ASHRAE 90.1 and IECC Fault Detection and Diagnostic (FDD) requirements.

i. Shall be capable of introducing up to 100% outdoor air.

j. Shall be equipped with a barometric relief damper capable of relieving up to 100% return air and contain seals that meet ASHRAE 90.1 requirements.

k. Shall be designed to close damper(s) during loss-of-power situations with spring return built into motor.

l. Dry bulb outdoor air temperature sensor shall be provided as standard. Enthalpy sensor is also available on factory-installed economizers only. Outdoor air sensor setpoint shall be adjustable and shall range from 40°F to 100°F (4°C to 38°C). Additional sensor options shall be available as accessories.

m. The economizer controller shall also provide control of an accessory power exhaust unit function. Factory set at 100%, with a range of 0% to 100%.

n. The economizer shall maintain minimum airflow into the building during occupied period and provide design ventilation rate for full occupancy.

o. Dampers shall be completely closed when the unit is in the unoccupied mode.

p. Economizer controller shall accept a 0 to 10 vdc CO_2 sensor input for IAQ/DCV control. In this mode, dampers shall modulate the outdoor air damper to provide ventilation based on the sensor input.

q. Compressor lockout temperature on POL224 control is adjustable from –45°F to 80°F (–43°C to 26°C), set at a factory default of 32°F (0°C).

r. Actuator shall be direct coupled to economizer gear. No linkage arms or control rods shall be acceptable.

s. Contains LED indication for free cooling, sensor, and damper operation.

3. Wi-Fi/WLAN Stick for EconomizerONE POL224 (field-installed):

This item allows use of the Siemens Climatix ECO®[1] mobile application.

4. Two-Position Damper (Field-installed only):

a. Damper shall be a Two-Position Damper. Damper travel shall be from the full closed position to the field adjustable %-open setpoint.

b. Damper shall include adjustable damper travel from 25% to 100% (full open).

c. Damper shall include single or dual blade, gear driven dampers and actuator motor.

d. Actuator shall be direct coupled to damper gear. No linkage arms or control rods shall be acceptable.

e. Damper will admit up to 100% outdoor air for applicable rooftop units.

f. Damper shall close upon indoor (evaporator) fan shutoff and/or loss of power.

g. The damper actuator shall plug into the rooftop unit's wiring harness plug. No hard wiring shall be required.

h. Outside air hood shall include aluminum water entrainment filter.

5. Manual Damper (Field-installed only):

a. Manual damper package shall consist of damper, air inlet screen, and rain hood

1. Third-party trademarks and logos are the property of their respective owners.

which can be preset to admit up to 25 or 50% outdoor air for year round ventilation.

6. Humidi-MiZer® Adaptive Dehumidification System:
   a. The Humidi-MiZer Adaptive Dehumidification System shall be factory installed and shall provide greater dehumidification of the occupied space by two modes of dehumidification operations in addition to its normal design cooling mode:
      1) Subcooling mode further sub cools the hot liquid refrigerant leaving the condenser coil when both temperature and humidity in the space are not satisfied.
      2) Hot gas reheat mode shall mix a portion of the hot gas from the discharge of the compressor with the hot liquid refrigerant leaving the condenser coil to create a two-phase heat transfer in the system, resulting in a neutral leaving air temperature when only humidity in the space is not satisfied.
      3) Includes low ambient controller.
7. Low Ambient Control Package:
   a. Controller shall control coil head pressure by condenser fan speed modulation or condenser fan cycling and wind baffles.
   b. Shall consist of solid-state control and condenser coil temperature sensor to maintain condensing temperature between 90°F (32°C) and 110°F (43°C) at outdoor ambient temperatures down to 0°F (–18°C).
8. Propane Gas Conversion Kit:
   a. Package shall contain all the necessary hardware and instructions to convert a standard natural gas unit for use with liquefied propane, up to 2000 ft (610 m) elevation.
   b. Additional accessory kits may be required for applications above 2000 ft (610 m) elevation.
9. Flue Shield (07-12 sizes only):
   a. Flue shield shall provide protection from the hot sides of the gas flue hood.
10. Condenser Coil Hail Guard Assembly:
    a. Shall protect against damage from hail.
    b. Shall be either hood style or louvered.
11. Unit-Mounted, Non-Fused Disconnect Switch (Available on 6 to 10 ton units with MOCPs of 80 amps or less, or 12.5 ton units with MOCPs of 100 amps or less):
    a. Switch shall be factory installed, internally mounted.
    b. National Electric Code (NEC) and UL approved non-fused switch shall provide unit power shutoff.
    c. Shall be accessible from outside the unit.
    d. Shall provide local shutdown and lockout capability.
    e. Sized only for the unit as ordered from the factory. Does not accommodate field-installed devices.
12. Convenience Outlet:
    a. Powered convenience outlet.
       1) Outlet shall be powered from main line power to the rooftop unit.
       2) Outlet shall be powered from line side or load side of disconnect by installing contractor, as required by code. If outlet is powered from load side of disconnect, unit electrical ratings shall be UL certified and rated for additional outlet amperage.
       3) Outlet shall be factory-installed and internally mounted with easily accessible 115-v female receptacle.
       4) Outlet shall include 15 amp GFI receptacles with independent fuse protection.
       5) Voltage required to operate convenience outlet shall be provided by a factory installed step-down transformer.
       6) Outlet shall be accessible from outside the unit.
       7) Outlet shall include a field installed "Wet in Use" cover.
    b. Factory-Installed Non-Powered convenience outlet.
       1) Outlet shall be powered from a separate 115/120v power source.
       2) A transformer shall not be included.
       3) Outlet shall be factory-installed and internally mounted with easily accessible 115-v female receptacle.
       4) Outlet shall include 15 amp GFI receptacles with independent fuse protection.
       5) Outlet shall be accessible from outside the unit.
       6) Outlet shall include a field installed "Wet in Use" cover.
    c. Field-Installed Non-Powered convenience outlet.
       1) Outlet shall be powered from a separate 115/120v power source.
       2) A transformer shall not be included.
       3) Outlet shall be field-installed and internally mounted with easily accessible 115-v female receptacle.
       4) Outlet shall include 20 amp GFI receptacles. This kit provides a flexible installation method which allows code compliance for height requirements of the GFCI outlet from the finished roof surface as well as

the capability to relocate the outlet to a more convenient location.

5) Outlet shall be accessible from outside the unit.

6) Outlet shall include a field installed "Wet in Use" cover.

13. Flue Discharge Deflector:
    a. Flue discharge deflector shall direct unit exhaust vertically instead of horizontally.
    b. Deflector shall be defined as a "natural draft" device by the National Fuel and Gas (NFG) code.
14. Thru-the-Base Connectors:
    a. Kits shall provide connectors to permit gas and electrical connections to be brought to the unit through the unit basepan.
    b. Minimum of four connection locations per unit.
15. Supply Duct Cover (size 14 only):
    a. Required when field converting the factory standard vertical duct supply to horizontal duct supply configuration. One required per unit.
16. Propeller Power Exhaust:
    a. Power exhaust shall be used in conjunction with an integrated economizer.
    b. Independent modules for vertical or horizontal return configurations shall be available.
    c. Horizontal power exhaust shall be mounted in return ductwork.
    d. Power exhaust shall be controlled by economizer controller operation. Exhaust fans shall be energized when dampers open past the 0 to 100% adjustable setpoint on the economizer control.
17. Roof Curbs (Vertical):
    a. Full perimeter roof curb with exhaust capability providing separate air streams for energy recovery from the exhaust air without supply air contamination.
    b. Formed galvanized steel with wood nailer strip and shall be capable of supporting entire unit weight.
    c. Permits installation and securing of ductwork to curb prior to mounting unit on the curb.
18. High Altitude Gas Conversion Kit:
    a. Package shall contain all the necessary hardware and instructions to convert a standard natural gas unit to operate from 2000 to 7000 ft (610 to 2134 m) elevation with natural gas or from 0 to 7000 ft (0 to 2134 m) elevation with liquefied propane.
19. Outdoor Air Enthalpy Sensor:
    a. The outdoor air enthalpy sensor shall be used to provide single enthalpy control. When used in conjunction with a return air enthalpy sensor, the unit will provide differential enthalpy control. The sensor allows the unit to determine if outside air is suitable for free cooling.
20. Return Air Enthalpy Sensor:
    a. The return air enthalpy sensor shall be used in conjunction with an outdoor air enthalpy sensor to provide differential enthalpy control.
21. Indoor Air Quality (CO_2) Sensor:
    a. Shall be able to provide demand ventilation indoor air quality (IAQ) control.
    b. The IAQ sensor shall be available in duct mount, wall mount, or wall mount with LED display. The setpoint shall have adjustment capability.
22. Smoke Detectors (factory-installed only):
    a. Shall be a Four-Wire Controller and Detector.
    b. Shall be environmental compensated with differential sensing for reliable, stable, and drift-free sensitivity.
    c. Shall use magnet-activated test/reset sensor switches.
    d. Shall have tool-less connection terminal access.
    e. Shall have a recessed momentary switch for testing and resetting the detector.
    f. Controller shall include:
        1) One set of normally open alarm initiation contacts for connection to an initiating device circuit on a fire alarm control panel.
        2) Two Form-C auxiliary alarm relays for interface with rooftop unit or other equipment.
        3) One Form-C supervision (trouble) relay to control the operation of the Trouble LED on a remote test/reset station.
        4) Capable of direct connection to two individual detector modules.
        5) Can be wired to up to 14 other duct smoke detectors for multiple fan shutdown applications.
23. Winter Start Kit:
    a. Shall contain a bypass device around the low pressure switch.
    b. Shall be required when mechanical cooling is required down to 25°F (–4°C).
    c. Shall not be required to operate on an economizer when below an outdoor ambient of 40°F (4°C).
24. Time Guard:
    a. Shall prevent compressor short-cycling by providing a 5-minute delay (±2 minutes)

before restarting a compressor after shutdown for any reason.

b. One device shall be required per compressor.

25. Disconnect Switch Bracket (size 14 only):
    a. Provides a pre-engineered and sized mounting bracket for applications requiring a unit mounted fused and non-fused disconnect of greater than 100 amps. Bracket assures that no damage will occur to coils when mounting with screws and other fasteners.
26. Hinged Access Panels:
    a. Shall provide easy access through integrated quarter turn latches.
    b. Shall be on major panels of: filter, control box, fan motor, and compressor.
27. Condensate Overflow Switch:
    a. This sensor and related controller monitors the condensate level in the drain pan and shuts down compression operation when overflow conditions occur. It includes:
        1) Indicator light — solid red (more than 10 seconds on water contact — compressors disabled), blinking red (sensor disconnected).
        2) 10 second delay to break — eliminates nuisance trips from splashing or waves in pan (sensor needs 10 seconds of constant water contact before tripping).
        3) Disables the compressors operation when condensate plug is detected, but still allows fans to run for Economizer.
28. 4 in. MERV-13 Return Air filters:
    a. Factory option to upgrade standard unit filters to 4 in. MERV-13 filters. Filter media is securely fasted inside the filter frame on all four sides.
29. 4 in. Filter Rack Kit:
    a. The 4 in. filter rack accessory kit is designed to hold 4 in. MERV-8 or MERV-13 filters. Filters not included in kit.
30. 2 in. MERV-13 Return Air Filters:
    a. Accessory kit to field upgrade standard unit filters to 2 in. MERV-13 filters.
31. 2 in. MERV-8 Return Air Filters:
    a. Accessory kit to field upgrade standard unit filters to 2 in. MERV-8 filters.
32. Phase Monitor Control:
    a. Shall monitor the sequence of three phase electrical system to provide a phase reversal protection.
    b. Shall monitor the three phase voltage inputs to provide a phase loss protection for the three phase device.
    c. Will work on either a Delta or Wye power connection.
33. Horn/Strobe Annunciator:
    a. Provides an audible/visual signaling device for use with factory-installed option or field installed accessory smoke detectors.
        1) Requires installation of a field-supplied 24-v transformer suitable for 4.2 VA (AC) or 3.0 VA (DC) per horn/strobe accessory.
        2) Requires field-supplied electrical box, North American 1-gang box, 2 in. (51 mm) x 4 in. (102 mm).
        3) Shall have a clear colored lens.
34. High Short Circuit Current Rating (SCCR) Protection:
    a. Factory-installed option provides high short circuit current protection to each compressor, plus all indoor and outdoor fan motors of 10 kA against high potential fault current situations. (Standard unit comes with 5 kA rating.)
    b. This option is not available with factory installed Non-Fused Disconnect, Humidi-MiZer system, Low Ambient controls, Phase loss monitor/protection and 575 Volt models.
35. HACR Breaker
    a. These manual reset devices provide overload and short circuit protection for the unit. Factory wired and mounted with the units, with access cover to help provide environmental protection. On 575V applications, HACR breaker can only be used with WYE power distribution systems. Use on Delta power distribution systems is prohibited.
    b. Sized only for the unit as ordered from the factory. Does not accommodate field-installed devices.
36. Foil Faced Insulation
    a. Throughout unit cabinet air stream, non-fibrous and cleanable foil faced insulation is used.

Note about this specification:
This specification is in the "Masterformat" as published by the Construction Specification Institute. Please feel free to copy this specification directly into your building spec.

Cooling Only/Electric Heat Packaged Rooftop

HVAC Guide Specifications

Size Range: **6 to 12.5 Nominal Tons**

Carrier Model Number: **50GC*07-14**

Part 1 — (23 06 80) Schedules for Decentralized HVAC Equipment

1.01 (23 06 80.13) Decentralized Unitary HVAC Equipment Schedule:

A. (23 06 80.13.A.) Rooftop Unit (RTU) Schedule:

1. Schedule is per the project specification requirements.

Part 2 — (23 07 16) HVAC Equipment Insulation

2.01 (23 07 16.13) Decentralized, Rooftop Units:

A. (23 07 16.13.A.) Evaporator Fan Compartment:

1. Interior cabinet surfaces shall be insulated with a minimum 1/2 in. thick, minimum 1-1/2 lb density, flexible fiberglass insulation bonded with a phenolic binder, neoprene coated on the air side.
2. Insulation and adhesive shall meet NFPA 90A requirements for flame spread and smoke generation.

B. (23 07 16.13.B.) Electric Heat Compartment:

1. Aluminum foil-faced fiberglass insulation shall be used.
2. Insulation and adhesive shall meet NFPA 90A requirements for flame spread and smoke generation.

Part 3 — (23 09 13) Instrumentation and Control Devices for HVAC

3.01 (23 09 13.23) Sensors and Transmitters:

A. (23 09 13.23.A.) Thermostats:

1. Thermostat must:
   a. energize both "W" and "G" when calling for heat.
   b. have capability to energize 2 stages of cooling, and 2 different stages of heating.
   c. include capability for occupancy scheduling.

Part 4 — (23 09 23) Direct Digital Control system for HVAC

4.01 (23 09 23.13) Decentralized, Rooftop Units:

A. (23 09 23.13.A.) SystemVu™ intelligent integrated Direct Digital Control (DDC) shall provide:

1. Integrated unit operation for comfort cooling, heating ventilation as well as all monitoring, recording and reporting capabilities. Controller shall also provide diagnostics and alarms of abnormal unit operation through the controller. Controller shall have an intuitive user display and be able to be used in a standalone operation or via building automation system (BAS).
2. Quick Unit Status LEDs of: RUN — meaning all systems are go, ALERT — that indicates there is currently a non-critical issue with the unit, like filters need to be replaced and FAULT — that indicates the unit has a critical issue and will possibly shut down.
3. Six large navigation keys for easy access. Navigation keys shall consist of: TEST, BACK, ENTER, and MENU along with UP and DOWN arrows.
4. Full back lit user display with 4 line by 30 character text capabilities. Display menu shall be designed to provide guided major menus and sub menus main menus provided below:
   a. Shutdown Unit
   b. Run Status
   c. Settings
   d. Alerts/Faults
   e. Service
   f. Inputs
   g. Outputs
   h. USB
5. The capability for standalone operation with conventional thermostat/sensor or use with building automation systems (BAS) of Carrier i-Vu®, BACnet[1] MS/TP and Carrier Comfort Network® (CCN) systems. No special modules or boards are required for these capabilities. Has the capability to work with Equipment Touch™ and System Touch™ devices and ZS Sensors.
6. The ability to read refrigerant pressures at display or via BAS network of; Discharge Pressure and Suction Pressure. The need for traditional refrigerant gauges is not required.
7. USB Data Port for flash drive interaction. This will allow the transfer of data for uploads, downloads, perform software upgrades, back-up and restore data and file transfer data such as component number of starts and run hours.
8. Reverse Rotation Protection of compressors if field three phase wiring is misapplied.
9. Provide service capabilities of:
   a. Auto run test
   b. Manual run test
   c. Component run hours and starts
   d. Commissioning reports
   e. Data logging
   f. Alarm history

1. Third-party trademarks and logos are the property of their respective owners.

10. Economizer control and diagnostics. Set up economizer operation, receive feedback from actuator. Also meets the most recent California Title 24, ASHRAE 90.1 and IECC Fault Detection and Diagnostic (FDD) requirements.
11. Unit cooling operation down to 40°F (4°C) [0°F (–18°C) for size 12 models].
12. Controller shall have easy access connections around the controller perimeter area and consist of Mate-N-Lok, terminal block and RJ style modular jack connections.
13. 365 day real time clock, 20 holiday schedules along with occupied and unoccupied scheduling.
14. Auto-Recognition for easy installation and commissioning of devices like economizers, space sensors, etc.
15. A 5°F (3°C) temperature difference between cooling and heating set points to meet the latest ASHRAE 90.1 Energy Standard.
16. Contain return air sensor, supply air sensor and outdoor air sensor to help monitor and provide data for the unit comfort operation, diagnostic and alarms.
17. Use of Carrier's field accessory hand-held Navigator™ display, Equipment Touch and System Touch devices.
18. Units with the factory-installed Humidi-MiZer® system option are capable of providing multiple modes of improved dehumidification as a variation of the normal cooling cycle.
19. Supply Air Tempering control operates the gas or electric heat to maintain a minimum supply air temperature during conditions where very cold outdoor air causes the supply air temperature to fall below the configured Supply Air Tempering Setpoint. This occurs during periods where DCV is active and increasing the amount of outdoor air or in cases where the system is operating at very low airflow and the calculated economizer position has increased to maintain a constant ventilation rate.
20. Demand limiting in SystemVu™ is achieved through set point expansion. The systems heating and cooling set points are expanded in steps or levels. The degree to which the set points may be expanded is defined by the 6 demand level offsets and the 2 commanded demand limit levels.
21. 3-year limited part warranty.

Part 5 — (23 09 33) Electric and Electronic Control System for HVAC

5.01 (23 09 33.13) Decentralized, Rooftop Units:

A. (23 09 33.13.A.) General:

1. Shall be complete with self-contained low-voltage control circuit protected by a resettable circuit breaker on the 24-v transformer side. Transformer shall have 75VA capability.
2. Shall utilize color-coded wiring.
3. Shall include a Unit Control Board to conveniently and safely provide connection points for vital control functions such as: smoke detectors, phase monitor, economizer, thermostat, DDC control options, and low and high pressure switches. Controller shall also provide an intuitive means to adjust the indoor fan speed through a simple switch and pot adjustment design.
4. Unit shall include a minimum of one 8-pin screw terminal connection board for connection of control wiring.

B. (23 09 33.13.B.) Safeties:

1. Compressor over-temperature, over-current. High internal pressure differential.
2. Low Pressure Switch.
   a. Low pressure switch shall use different color wire than the high pressure switch. The purpose is to assist the installer and service technician to correctly wire and or troubleshoot the rooftop unit.
3. High Pressure Switch.
   a. High pressure switch shall use different color wire than the low pressure switch. The purpose is to assist the installer and service technician to correctly wire and or troubleshoot the rooftop unit.
4. Mixed Air Auto Reset Temperature Switch.
   a. When return air temperatures get the critical point that can cause compressor reliability issues, this switch will shut down compression only until the temperature raise accordingly. Switch opens at 60°F (16°C) and closes at 65°F (18°C).
5. Automatic Reset, Motor Thermal Overload Protector.

Part 6 — (23 09 93) Sequence of Operations for HVAC Controls

6.01 (23 09 93.13) Decentralized, Rooftop Units:

A. (23 09 93.13.A.) INSERT SEQUENCE OF OPERATION

Part 7 — (23 40 13) Panel Air Filters

7.01 (23 40 13.13) Decentralized, Rooftop Units:

A. (23 40 13.13.A.) Standard Filter Section:

1. Shall consist of factory installed, low velocity, disposable 2 in. thick fiberglass filters of commercially available sizes.
2. Unit shall use only one filter size. Multiple sizes are not acceptable.
3. Filters shall be accessible through an access panel with "no-tool" removal as described in the unit cabinet section of this specification (23 81 19.13.G).

Part 8 — (23 81 19) Self-Contained Air Conditioners

8.01 (23 81 19.13) Small-Capacity Self-Contained Air Conditioners:

A. (23 81 19.13.A.) General:

1. Outdoor, rooftop mounted, electrically controlled, heating and cooling unit utilizing fully hermetic scroll compressors for cooling duty and optional electric heat for heating duty.
2. Factory assembled, single-piece heating and cooling rooftop unit. Contained within the unit enclosure shall be all factory wiring, piping, controls, and special features required prior to field start-up.
3. Unit shall use Puron® (R-410A) refrigerant.
4. Unit shall be installed in accordance with the manufacturer's instructions.
5. Unit must be selected and installed in compliance with local, state, and federal codes.

B. (23 81 19.13.B.) Quality Assurance:

1. Unit meets ASHRAE 90.1 minimum efficiency requirements.
2. Unit shall be rated in accordance with AHRI Standards 340/360.
3. Unit shall be designed to conform to ASHRAE 15.
4. Unit shall be UL-tested and certified in accordance with ANSI Z21.47 Standards and UL-listed and certified under Canadian standards as a total package for safety requirements.
5. Insulation and adhesive shall meet NFPA 90A requirements for flame spread and smoke generation.
6. Unit casing shall be capable of withstanding 500 hour salt spray exposure per ASTM B117 (scribed specimen).
7. Unit shall be designed in accordance with ISO 9001, and shall be manufactured in a facility registered by ISO 9001:2015.
8. Roof curb shall be designed to conform to NRCA Standards.
9. Unit shall be subjected to a completely automated run test on the assembly line. The data for each unit will be stored at the factory, and must be available upon request.
10. Unit shall be designed in accordance with UL Standard 60335-2-40, including tested to withstand rain.
11. Unit shall be constructed to prevent intrusion of snow and tested to prevent snow intrusion into the control box up to 40 mph.
12. Unit shake tested to assurance level 1, ASTM D4169 to ensure shipping reliability.

C. (23 81 19.13.C.) Delivery, Storage, and Handling:

1. Unit shall be stored and handled per manufacturer's recommendations.
2. Lifted by crane requires either shipping top panel or spreader bars.
3. Unit shall only be stored or positioned in the upright position.

D. (23 81 19.13.D.) Project Conditions:

1. As specified in the contract.

E. (23 81 19.13.E.) Operating Characteristics:

1. Unit shall be capable of starting and running at 125°F (52°C) ambient outdoor temperature except 12 size models that are capable of starting and running at 120°F (49°C), meeting maximum load criteria of AHRI Standard 340/360 at ±10% voltage.
2. Compressor with standard controls shall be capable of operation down to 40°F (4°C) [0°F (–18°C) for size 12 models], ambient outdoor temperatures. Accessory winter start kit is necessary if mechanically cooling at ambient temperatures down to 25°F (–4°C) or 0°F (–18°C).
3. Unit shall discharge supply air vertically or horizontally as shown on contract drawings.
4. Unit shall be factory configured for vertical supply and return configurations.
5. Unit shall be field convertible from vertical to horizontal airflow on all models. No special kit required except on 14 size models that requires a Supply Duct Kit field installation for horizontal air flow.
6. Unit shall be capable of mixed operation: vertical supply with horizontal return or horizontal supply with vertical return.

F. (23 81 19.13.F.) Electrical Requirements:

1. Main power supply voltage, phase, and frequency must match those required by the manufacturer.
2. Standard Control Panel SCCR (short circuit current rating): 5kA RMS at Rated Symmetrical Voltage.

G. (23 81 19.13.G.) Unit Cabinet:

1. Unit cabinet shall be constructed of galvanized steel, and shall be bonderized and coated with a prepainted baked enamel finish on all externally exposed surfaces.
2. Unit cabinet exterior paint shall be: film thickness, (dry) 0.003 in. minimum, gloss (per ASTM D523, 60°F/16°C): 60, Hardness: H-2H Pencil hardness.
3. Evaporator fan compartment interior cabinet insulation shall conform to AHRI Standards 340/360 minimum exterior sweat criteria. Interior surfaces shall be insulated with a minimum 1/2 in. thick, 1 lb density, flexible fiberglass insulation, neoprene coated on the air side. Aluminum foil-faced fiberglass insulation shall be used in the heat compartment.
4. Base of unit shall have a minimum of four locations for thru-the-base gas and electrical

connections (factory-installed or field-installed), standard.

5. Base Rail:
   a. Unit shall have base rails on a minimum of 2 sides.
   b. Holes shall be provided in the base rails for rigging shackles to facilitate maneuvering and overhead rigging.
   c. Holes shall be provided in the base rail for moving the rooftop by fork truck.
   d. Base rail shall be a minimum of 16 gauge thickness.
6. Condensate Pan and Connections:
   a. Shall be a sloped condensate drain pan made of a corrosion resistant material.
   b. Shall comply with ASHRAE Standard 62.
   c. Shall use a 3/4 in. 14 NPT drain connection, possible either through the bottom or side of the drain pan. Connection shall be made per manufacturer's recommendations.
7. Top Panel:
   a. Shall be a single piece top panel on 07-12 models and two piece on 14 size models.
8. Electrical Connections:
   a. All unit power wiring shall enter unit cabinet at a single, factory prepared, knockout location.
   b. Thru-the-base capability.
      1) Standard unit shall have a thru-the-base electrical location(s) using a raised, embossed portion of the unit basepan.
      2) Optional, factory approved, water-tight connection method must be used for thru-the-base electrical connections.
      3) No basepan penetration, other than those authorized by the manufacturer, is permitted.
9. Component Access Panels (standard):
   a. Cabinet panels shall be easily removable for servicing.
   b. Unit shall have one factory installed, tool-less, removable, filter access panel.
   c. Panels covering control box, indoor fan, indoor fan motor, gas components (where applicable), and compressors shall have molded composite handles.
   d. Handles shall be UV modified, composite. They shall be permanently attached, and recessed into the panel.
   e. Screws on the vertical portion of all removable access panel shall engage into heat resistant, molded composite collars.
   f. Collars shall be removable and easily replaceable using manufacturer recommended parts.

H. (23 81 19.13.H.) Coils:
1. Standard Aluminum Fin Copper Tube Coils:
   a. Standard evaporator and condenser coils shall have aluminum lanced plate fins mechanically bonded to seamless internally grooved copper tubes with all joints brazed.
   b. Evaporator coils shall be leak tested to 150 psig, pressure tested to 450 psig, and qualified to UL 1995 burst test at 1775 psig.
   c. Condenser coils shall be leak tested to 150 psig, pressure tested to 650 psig, and qualified to UL 1995 burst test at 1980 psig.
2. Optional Pre-coated Aluminum Fin Condenser Coils:
   a. Shall have a durable epoxy-phenolic coating to provide protection in mildly corrosive coastal environments.
   b. Coating shall be applied to the aluminum fin stock prior to the fin stamping process to create an inert barrier between the aluminum fin and copper tube.
   c. Epoxy-phenolic barrier shall minimize galvanic action between dissimilar metals.
   d. Corrosion durability of fin stock shall be confirmed through testing to be no less than 1000 hours salt spray per ASTM B117-90.
   e. Corrosion durability of fin stock shall be confirmed through testing to have no visible corrosion after 48 hour immersion in a room temperature solution of 5% salt, 1% acetic acid.
   f. Fin stock coating shall pass 2000 hours of the following: one week exposure in the prohesion chamber followed by one week of accelerated ultraviolet light testing. Prohesion chamber: the solution shall contain 3.5% sodium chloride and 0.35% ammonium sulfate. The exposure cycle is one hour of salt fog application at ambient followed by one hour drying at 95°F (35°C).
3. Optional Copper Fin Evaporator and Condenser Coils:
   a. Shall be constructed of copper fins mechanically bonded to copper tubes and copper tube sheets.
   b. Galvanized steel tube sheets shall not be acceptable.
   c. A polymer strip shall prevent coil assembly from contacting the sheet metal coil pan to minimize potential for galvanic corrosion between coil and pan.
4. Optional E-coated Aluminum Fin Evaporator and Condenser Coils:
   a. Shall have a flexible epoxy polymer coating uniformly applied to all coil surface areas without material bridging between fins.

b. Coating process shall ensure complete coil encapsulation of tubes, fins and headers.

c. Color shall be high gloss black with gloss per ASTM D523-89.

d. Uniform dry film thickness from 0.8 to 1.2 mil on all surface areas including fin edges.

e. Superior hardness characteristics of 2H per ASTM D3363-92A and cross-hatch adhesion of 4B-5B per ASTM D3359-93.

f. Impact resistance shall be up to 160 in.-lb (ASTM D2794-93).

g. Humidity and water immersion resistance shall be up to minimum 1000 and 250 hours respectively (ASTM D2247-92 and ASTM D870-92).

h. Corrosion durability shall be confirmed through testing to be no less than 1000 hours salt spray per ASTM B117-90.

I. (23 81 19.13.I.) Refrigerant Components:

1. Refrigerant circuit shall include the following control, safety, and maintenance features:

a. Thermostatic Expansion Valve (TXV) shall help provide optimum performance across the entire operating range. Shall contain removable power element to allow change out of power element and bulb without removing the valve body.

b. Refrigerant filter drier — Solid core design.

c. Service gauge connections on suction and discharge lines.

d. Pressure gauge access through a specially designed access port in the top panel of the unit.

2. Compressors:

a. Unit shall use two scroll compressors installed in a tandem configuration on a single refrigeration circuit.

b. Evaporator coils shall be a full active design to help better control comfort latent removal.

c. Compressor motors shall be cooled by refrigerant gas passing through motor windings.

d. Compressors shall be internally protected from high discharge temperature conditions.

e. Compressors shall be protected from an over-temperature and over-amperage conditions by an internal, motor overload device.

f. Compressor shall be factory mounted on rubber grommets.

g. Compressor motors shall have internal line break thermal, current overload and high pressure differential protection.

h. Crankcase heaters shall not be required for normal operating range, unless required by compressor manufacturer due to refrigerant charge limits.

i. Compressors shall be a two stage cooling capacity design.

J. (23 81 19.13.J.) Return Air Filter Section:

1. Filters access is specified in the unit cabinet section of this specification.

2. Filters shall be held in place by a pivoting filter tray, facilitating easy removal and installation.

3. Shall consist of factory installed, low velocity, throw-away 2 in. thick fiberglass filters.

4. Filters shall be standard, commercially available sizes.

5. Only one size filter per unit is allowed.

K. (23 81 19.13.K.) Evaporator Fan and Motor with EcoBlue™ Technology:

1. Direct Drive Evaporator Fan Motor:

a. Shall be a ECM motor design.

b. Shall have permanently lubricated bearings.

c. Shall have inherent automatic-reset thermal overload protection.

d. Shall have slow ramp up to speed capabilities.

e. Shall require no fan/motor belts for operation, adjustments and or initial fan speed set up.

f. Fan DC voltage set up on Unit Control Board can eliminate the need of removal of blower access door, required on conventional belt drive systems.

g. Shall be internally protected from electrical phase reversal and loss.

2. Evaporator Fan:

a. Shall be easily set with dedicated selection switch and adjustment pot on unit control board or through SystemVu™ controller.

b. Shall provide two stage cooling capacity control, the indoor fan speed is automatically controlled to meet the code-compliant <66% low fan speed and 100% at full fan speed operation.

c. Blower fan shall be a Vane Axial fan design with 75% less moving parts than a conventional belt drive system.

d. Shall be constructed of a cast aluminum stator and high impact composite material on stator, rotor and air inlet casing.

e. Shall be a patented / pending design with a corrosion resistant material and dynamically balanced.

f. Shall have slow ramp up to speed capabilities to help reduce sound and comfort issues typically associated with single speed belt drive systems.

g. Shall be a slide out design with removal of a few support brackets.

3. Shall include an easily accessible Unit Control Board to conveniently and safely provide connection points for vital control functions such as: smoke detectors, phase monitor, gas controller, economizer, thermostat, DDC control options, and low, high and mixed air temperature switches. Controller shall also provide an intuitive means to adjust the indoor fan speed through a simple switch and pot adjustment design.

L. (23 81 19.13.L.) Condenser Fans and Motors:

1. Condenser Fan Motors:
   a. Shall be a totally enclosed motor.
   b. Shall use permanently lubricated bearings.
   c. Shall have inherent thermal overload protection with an automatic reset feature.
   d. Shall use a shaft-down design on all sizes.
2. Condenser Fans:
   a. Shall be a direct-driven propeller type fan.
   b. Shall have galvalum blades riveted to steel spider that have corrosion-resistant properties and shall be dynamically balanced.

M. (23 81 19.13.M.) Special Features Options and Accessories:

1. Integrated EconomizerONE and EconoMi$er® 2 Low Leak Rate Models.
   a. Integrated, gear driven opposing modulating blade design type capable of simultaneous economizer and compressor operation.
   b. Independent modules for vertical or horizontal return configuration shall be available. Vertical return modules shall be available as a factory installed option.
   c. Damper blades shall be galvanized steel with composite gears. Plastic or composite blades on intake or return shall not be acceptable.
   d. Shall include all hardware and controls to provide free cooling with outdoor air when temperature and/or humidity are below setpoints.
   e. Shall be equipped with gear driven dampers for both the outdoor ventilation air and the return air for positive air stream control.
   f. Standard leak rate shall be equipped with dampers not to exceed 2% leakage at 1 in. wg pressure differential.
   g. Economizer controller on EconomizerONE models shall be Siemens POL224 that provides:
      1) Combined minimum and DCV maximum damper position potentiometers with compressor staging relay.
      2) Functions with solid-state analog enthalpy or dry bulb changeover control sensing.
      3) LED indication for free cooling, sensor, and damper operation.
      4) One-line LCD interface screen for setup, configuration, and troubleshooting.
      5) Optional configuration via WLAN stick and Siemens Climatix™[1] smartphone app for easy setup.
      6) On-board Fault Detection and Diagnostics (FDD) that senses and alerts when the economizer is not operating properly, per California Title 24, ASHRAE 90.1 and IECC[1].
      7) Sensor failure loss of communication identification.
      8) Capabilities for use with multiple-speed or single speed indoor fan systems.
      9) Digital sensors: Dry bulb and Enthalpy.
   h. Economizer controller on EconoMi$er 2 models with SystemVu™ controls shall be a 4 to 20mA design controlled directly by the controller. SystemVu controller meets California Title 24, ASHRAE 90.1 and IECC Fault Detection and Diagnostic (FDD) requirements.
   i. Shall be capable of introducing up to 100% outdoor air.
   j. Shall be equipped with a barometric relief damper capable of relieving up to 100% return air and contain seals that meet ASHRAE 90.1 requirements.
   k. Shall be designed to close damper(s) during loss-of-power situations with spring return built into motor.
   l. Dry bulb outdoor air temperature sensor shall be provided as standard. Enthalpy sensor is also available on factory installed only. Outdoor air sensor setpoint shall be adjustable and shall range from 40°F to 100°F (4°C to 38°C). Additional sensor options shall be available as accessories.
   m. The economizer controller shall also provide control of an accessory power exhaust unit function. Factory set at 100%, with a range of 0% to 100%.
   n. The economizer shall maintain minimum airflow into the building during occupied period and provide design ventilation rate for full occupancy.
   o. Dampers shall be completely closed when the unit is in the unoccupied mode.
   p. Economizer controller shall accept a 0 to 10 vdc CO_2 sensor input for IAQ/DCV control. In this mode, dampers shall modulate the outdoor air damper to provide ventilation based on the sensor input.

1. Third-party trademarks and logos are the property of their respective owners.

q. Compressor lockout temperature on POL224-control is adjustable from –45°F to 80°F (–43°C to 26°C), set at a factory default of 32°F (0°C).

r. Actuator shall be direct coupled to economizer gear. No linkage arms or control rods shall be acceptable.

s. Contains LED indication for free cooling, sensor, and damper operation.

2. Integrated EconomizerONE and EconoMi$er® 2 Ultra Low Leak Rate Models.

a. Integrated, gear driven opposing modulating blade design type capable of simultaneous economizer and compressor operation.

b. Independent modules for vertical or horizontal return configuration shall be available. Vertical return modules shall be available as a factory-installed option.

c. Damper blades shall be galvanized steel with composite gears. Plastic or composite blades on intake or return shall not be acceptable.

d. Shall include all hardware and controls to provide free cooling with outdoor air when temperature and/or humidity are below setpoints.

e. Shall be equipped with gear driven dampers for both the outdoor ventilation air and the return air for positive air stream control.

f. Ultra Low Leak design meets California Title 24 section 140.4 and ASHRAE 90.1 requirements for 4 cfm per sq ft on the outside air dampers and 10 cfm per sq ft on the return dampers.

g. Economizer controller on EconomizerONE models shall be the Siemens POL224 that provides:

1) One-line LCD interface screen for setup, configuration and troubleshooting.

2) Optional configuration via WLAN stick and Siemens Climatix™[1] smartphone app for easy setup.

3) On-board Fault Detection and Diagnostics (FDD) that senses and alerts when the economizer is not operating properly, per California Title 24, ASHRAE 90.1 and IECC.

4) Sensor failure loss of communication identification.

5) Capabilities for use with multiple-speed indoor fan systems.

6) Digital sensors: Dry bulb and Enthalpy.

h. Economizer controller on EconoMi$er 2 models with SystemVu™ controls shall be a 4-20mA design controlled directly by the controller. SystemVu controller meets California Title 24, ASHRAE 90.1 and IECC Fault Detection and Diagnostic (FDD) requirements.

i. Shall be capable of introducing up to 100% outdoor air.

j. Shall be equipped with a barometric relief damper capable of relieving up to 100% return air and contain seals that meet ASHRAE 90.1 requirements.

k. Shall be designed to close damper(s) during loss-of-power situations with spring return built into motor.

l. Dry bulb outdoor air temperature sensor shall be provided as standard. Enthalpy sensor is also available on factory installed only. Outdoor air sensor setpoint shall be adjustable and shall range from 40°F to 100°F (4°C to 38°C). Additional sensor options shall be available as accessories.

m. The economizer controller shall also provide control of an accessory power exhaust unit function. Factory set at 100%, with a range of 0% to 100%.

n. The economizer shall maintain minimum airflow into the building during occupied period and provide design ventilation rate for full occupancy.

o. Dampers shall be completely closed when the unit is in the unoccupied mode.

p. Economizer controller shall accept a 0 to 10 vdc CO_2 sensor input for IAQ/DCV control. In this mode, dampers shall modulate the outdoor air damper to provide ventilation based on the sensor input.

q. Compressor lockout temperature on POL224 control is adjustable from –45°F to 80°F (–43°C to 26°C), set at a factory default of 32°F (0°C).

r. Actuator shall be direct coupled to economizer gear. No linkage arms or control rods shall be acceptable.

s. Contains LED indication for free cooling, sensor, and damper operation.

3. Wi-Fi/WLAN Stick for EconomizerONE POL224 (field-installed):

This item allows use of the Siemens Climatix ECO®[1] mobile application.

4. Two-Position Damper (field-installed only):

a. Damper shall be a Two-Position Damper. Damper travel shall be from the full closed position to the field adjustable %-open setpoint.

b. Damper shall include adjustable damper travel from 25% to 100% (full open).

c. Damper shall include single or dual blade, gear driven dampers and actuator motor.

---

1. Third-party trademarks and logos are the property of their respective owners.

d. Actuator shall be direct coupled to damper gear. No linkage arms or control rods shall be acceptable.

e. Damper will admit up to 100% outdoor air for applicable rooftop units.

f. Damper shall close upon indoor (evaporator) fan shutoff and/or loss of power.

g. The damper actuator shall plug into the rooftop unit's wiring harness plug. No hard wiring shall be required.

h. Outside air hood shall include aluminum water entrainment filter.

5. Manual Damper (field-installed only):

a. Manual damper package shall consist of damper, air inlet screen, and rain hood which can be preset to admit up to 25% or 50% outdoor air for year round ventilation.

6. Humidi-MiZer Adaptive Dehumidification System:

a. The Humidi-MiZer® Adaptive Dehumidification System shall be factory installed and shall provide greater dehumidification of the occupied space by two modes of dehumidification operations in addition to its normal design cooling mode:

1) Subcooling mode further sub cools the hot liquid refrigerant leaving the condenser coil when both temperature and humidity in the space are not satisfied.

2) Hot gas reheat mode shall mix a portion of the hot gas from the discharge of the compressor with the hot liquid refrigerant leaving the condenser coil to create a two-phase heat transfer in the system, resulting in a neutral leaving air temperature when only humidity in the space is not satisfied.

3) Includes low ambient controller.

7. Low Ambient Control Package:

a. Controller shall control coil head pressure by condenser fan speed modulation or condenser fan cycling and wind baffles.

b. Shall consist of solid-state control and condenser coil temperature sensor to maintain condensing temperature between 90°F (32°C) and 110°F (43°C) at outdoor ambient temperatures down to 0°F (–18°C).

8. Condenser Coil Hail Guard Assembly:

a. Shall protect against damage from hail.

b. Shall be either hood style or louvered.

9. Unit-Mounted, Non-Fused Disconnect Switch (Available on 6 to 10 ton units with MOCPs of 80 amps or less, or 12.5 ton units with MOCPs of 100 amps or less):

a. Switch shall be factory installed, internally mounted.

b. National Electric Code (NEC) and UL approved non-fused switch shall provide unit power shutoff.

c. Shall be accessible from outside the unit.

d. Shall provide local shutdown and lockout capability.

e. Sized only for the unit as ordered from the factory. Does not accommodate field-installed devices.

10. Convenience Outlet:

a. Powered convenience outlet.

1) Outlet shall be powered from main line power to the rooftop unit.

2) Outlet shall be powered from line side or load side of disconnect by installing contractor, as required by code. If outlet is powered from load side of disconnect, unit electrical ratings shall be UL certified and rated for additional outlet amperage.

3) Outlet shall be factory-installed and internally mounted with easily accessible 115-v female receptacle.

4) Outlet shall include 15 amp GFI receptacles with independent fuse protection.

5) Voltage required to operate convenience outlet shall be provided by a factory installed step-down transformer.

6) Outlet shall be accessible from outside the unit.

7) Outlet shall include a field installed "Wet in Use" cover.

b. Factory-Installed Non-Powered convenience outlet.

1) Outlet shall be powered from a separate 115/120v power source.

2) A transformer shall not be included.

3) Outlet shall be factory-installed and internally mounted with easily accessible 115-v female receptacle.

4) Outlet shall include 15 amp GFI receptacles with independent fuse protection.

5) Outlet shall be accessible from outside the unit.

6) Outlet shall include a field installed "Wet in Use" cover.

c. Field-Installed Non-Powered convenience outlet.

1) Outlet shall be powered from a separate 115/120v power source.

2) A transformer shall not be included.

3) Outlet shall be field-installed and internally mounted with easily accessible 115-v female receptacle.

4) Outlet shall include 20 amp GFI receptacles. This kit provides a flexible installation

method which allows code compliance for height requirements of the GFCI outlet from the finished roof surface as well as the capability to relocate the outlet to a more convenient location.

5) Outlet shall be accessible from outside the unit.

6) Outlet shall include a field installed "Wet in Use" cover.

11. Thru-the-Base Connectors:
    a. Kits shall provide connectors to permit gas and electrical connections to be brought to the unit through the unit basepan.
    b. Minimum of four connection locations per unit.
12. Supply Duct Cover (size 14 only):
    a. Required when field converting the factory standard vertical duct supply to horizontal duct supply configuration. One required per unit.
13. Propeller Power Exhaust:
    a. Power exhaust shall be used in conjunction with an integrated economizer.
    b. Independent modules for vertical or horizontal return configurations shall be available.
    c. Horizontal power exhaust shall be mounted in return ductwork.
    d. Power exhaust shall be controlled by economizer controller operation. Exhaust fans shall be energized when dampers open past the 0 to 100% adjustable setpoint on the economizer control.
14. Roof Curbs (Vertical):
    a. Full perimeter roof curb with exhaust capability providing separate air streams for energy recovery from the exhaust air without supply air contamination.
    b. Formed galvanized steel with wood nailer strip and shall be capable of supporting entire unit weight.
    c. Permits installation and securing of ductwork to curb prior to mounting unit on the curb.
15. Outdoor Air Enthalpy Sensor:
    a. The outdoor air enthalpy sensor shall be used to provide single enthalpy control. When used in conjunction with a return air enthalpy sensor, the unit will provide differential enthalpy control. The sensor allows the unit to determine if outside air is suitable for free cooling.
16. Return Air Enthalpy Sensor:
    a. The return air enthalpy sensor shall be used in conjunction with an outdoor air enthalpy sensor to provide differential enthalpy control.
17. Indoor Air Quality (CO_2) Sensor:
    a. Shall be able to provide demand ventilation indoor air quality (IAQ) control.
    b. The IAQ sensor shall be available in duct mount, wall mount, or wall mount with LED display. The setpoint shall have adjustment capability.
18. Smoke Detectors (factory-installed only):
    a. Shall be a four-wire controller and detector.
    b. Shall be environmental compensated with differential sensing for reliable, stable, and drift-free sensitivity.
    c. Shall use magnet-activated test/reset sensor switches.
    d. Shall have tool-less connection terminal access.
    e. Shall have a recessed momentary switch for testing and resetting the detector.
    f. Controller shall include:
        1) One set of normally open alarm initiation contacts for connection to an initiating device circuit on a fire alarm control panel.
        2) Two Form-C auxiliary alarm relays for interface with rooftop unit or other equipment.
        3) One Form-C supervision (trouble) relay to control the operation of the Trouble LED on a remote test/reset station.
        4) Capable of direct connection to two individual detector modules.
        5) Can be wired to up to 14 other duct smoke detectors for multiple fan shutdown applications.
19. Winter Start Kit:
    a. Shall contain a bypass device around the low pressure switch.
    b. Shall be required when mechanical cooling is required down to 25°F (–4°C).
    c. Shall not be required to operate on an economizer when below an outdoor ambient of 40°F (4°C).
20. Time Guard:
    a. Shall prevent compressor short-cycling by providing a 5 minute delay (±2 minutes) before restarting a compressor after shutdown for any reason.
    b. One device shall be required per compressor.
21. Disconnect Switch Bracket (size 14 only):
    a. Provides a pre-engineered and sized mounting bracket for applications requiring a unit mounted fused and non-fused disconnect of greater than 100 amps. Bracket assures that no damage will occur to coils when mounting with screws and other fasteners.

22. Hinged Access Panels:
    a. Shall provide easy access through integrated quarter turn latches.
    b. Shall be on major panels of: filter, control box, fan motor, and compressor.
23. Condensate Overflow Switch:
    a. This sensor and related controller monitors the condensate level in the drain pan and shuts down compression operation when overflow conditions occur. It includes:
        1) Indicator light — solid red (more than 10 seconds on water contact — compressors disabled), blinking red (sensor disconnected).
        2) 10 second delay to break — eliminates nuisance trips from splashing or waves in pan (sensor needs 10 seconds of constant water contact before tripping).
        3) Disables the compressors operation when condensate plug is detected, but still allows fans to run for Economizer.
24. 4 in. MERV-13 Return Air Filters:
    a. Factory option to upgrade standard unit filters to 4 in. MERV-13 filters. Filter media is securely fasted inside the filter frame on all four sides.
25. 4 in. Filter Rack Kit:
    a. The 4 in. filter rack accessory kit is designed to hold 4 in. MERV-8 or MERV-13 filters. Filters not included in kit.
26. 2 in. MERV-13 Return Air Filters:
    a. Accessory kit to field upgrade standard unit filters to 2 in. MERV-13 filters.
27. 2 in. MERV-8 Return Air Filters:
    a. Accessory kit to field upgrade standard unit filters to 2 in. MERV-8 filters.
28. Phase Monitor Control:
    a. Shall monitor the sequence of three phase electrical system to provide a phase reversal protection.
    b. Shall monitor the three phase voltage inputs to provide a phase loss protection for the three phase device.
    c. Will work on either a Delta or Wye power connection.
29. Horn/Strobe Annunciator:
    a. Provides an audible/visual signaling device for use with factory-installed option or field installed accessory smoke detectors.
        1) Requires installation of a field-supplied 24-v transformer suitable for 4.2 VA (AC) or 3.0 VA (DC) per horn/strobe accessory.
        2) Requires field-supplied electrical box, North American 1-gang box, 2 in. (51 mm) x 4 in. (102 mm).
        3) Shall have a clear colored lens.
30. Electric Heat:
    a. Heating Section:
        1) Heater element open coil resistance wire, nickel-chrome alloy, 0.29 inches inside diameter, strung through ceramic insulators mounted on metal frame. Coil ends are staked and welded to terminal screw slots.
        2) Heater assemblies are provided with integral fusing for protection of internal heater circuits not exceeding 48 amps each. Auto reset thermo limit controls, magnetic heater contactors (24 v coil) and terminal block all mounted in electric heater control box (minimum 18 ga galvanized steel) attached to end of heater assembly.
31. High Short Circuit Current Rating (SCCR) Protection:
    a. High Short Circuit Current Rating (SCCR) protection: a. Factory-installed option provides high short circuit current protection to each compressor, plus all indoor and outdoor fan motors of 10 kA against high potential fault current situations. (Standard unit comes with 5 kA rating.)
    b. This option is not available with factory installed Non-Fused Disconnect, Humidi-MiZer system, Low Ambient controls, Phase loss monitor/protection, HACR breaker, and 575 Volt models.
32. HACR Breaker:
    a. These manual reset devices provide overload and short circuit protection for the unit. Factory wired and mounted with the units, with access cover to help provide environmental protection. On 575V applications, HACR breaker can only be used with WYE power distribution systems. Use on Delta power distribution systems is prohibited.
    b. Sized only for the unit as ordered from the factory. Does not accommodate field-installed devices.
33. Foil Faced Insulation:
    a. Throughout unit cabinet air stream, non-fibrous and cleanable foil faced insulation is used.

Manufacturer reserves the right to discontinue, or change at any time, specifications or designs without notice and without incurring obligations.

Pg 176 Catalog No. 04-52480133-01 Printed in U.S.A. Form 48-50GC-7-14-02PD
Replaces: 48-50GC-7-14-01PD